PCT WORLD INTELLECTUAL PROPERTY ORGANIZATION
International Bureau

INTERNATIONAL APPLICATION PUBLISHED UNDER THE PATENT COOPERATION TREATY (PCT)

(51) International Patent Classification 5 :
B21B 37/14, 37/10, 13/00, 37/00, 15/00

A1

(11) International Publication Number: **WO 94/17932**

(43) International Publication Date: 18 August 1994 (18.08.94)

(21) International Application Number: PCT/GB94/00276

(22) International Filing Date: 11 February 1994 (11.02.94)

(30) Priority Data:
93/0952 11 February 1993 (11.02.93) ZA

(71) Applicant *(for MW only)*: ABLEWHITE, Alan, James [GB/GB]; 57-60 Lincoln's Inn Fields, London WC2A 3LS (GB).

(71) Applicant *(for all designated States except US)*: ANGLO AMERICAN INDUSTRIAL CORPORATION LIMITED [ZA/ZA]; 44 Main Street, Johannesburg, Transvaal (ZA).

(72) Inventors; and
(75) Inventors/Applicants *(for US only)*: FOURIE, Eugene [ZA/ZA]; 57 Herbert Baker Drive, Groenkloof, Pretoria, Transvaal (ZA). NIEUWOUDT, Mechiel, Nicolaas [ZA/ZA]; 246 Rosalind Avenue, Murrayfield, Pretoria, Transvaal (ZA). FEHRSEN, Johannes, Hendrik [ZA/ZA]; 20A Meyer Street, Oaklands, Johannesburg, Transvaal (ZA).

(74) Agent: GODWIN, Edgar, James; Marks & Clerk, 57-60 Lincoln's Inn Fields, London WC2A 3LS (GB).

(81) Designated States: AT, AU, BB, BG, BR, BY, CA, CH, CN, CZ, DE, DK, ES, FI, GB, GE, HU, JP, KP, KR, KZ, LK, LU, LV, MG, MN, MW, NL, NO, NZ, PL, PT, RO, RU, SD, SE, SK, UA, US, UZ, VN, European patent (AT, BE, CH, DE, DK, ES, FR, GB, GR, IE, IT, LU, MC, NL, PT, SE), OAPI patent (BF, BJ, CF, CG, CI, CM, GA, GN, ML, MR, NE, SN, TD, TG).

Published
With international search report.
Before the expiration of the time limit for amending the claims and to be republished in the event of the receipt of amendments.

(54) Title: MANUFACTURE OF METALLIC STRIP

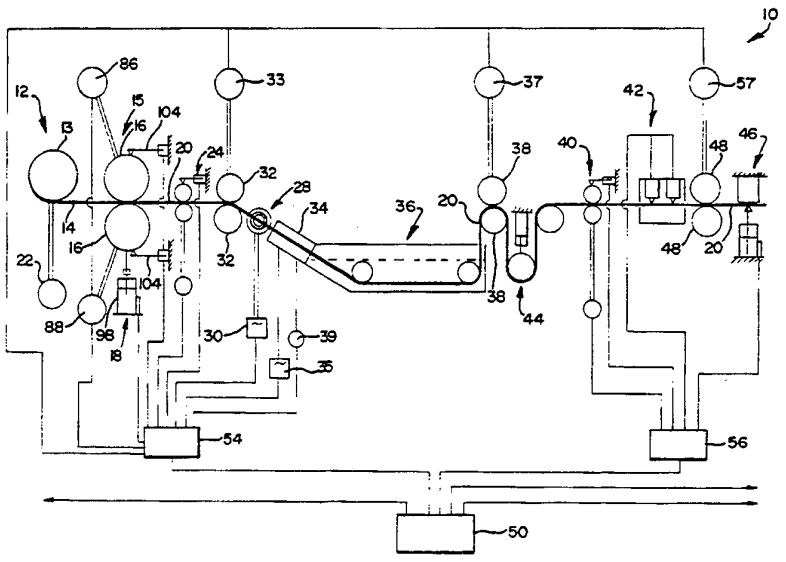

(57) Abstract

A method and apparatus for manufacturing metallic strip (20) with a varying thickness is described. The metallic strip is particularly for use as part of a windscreen wiper blade assembly. Feedstock (14) having a constant thickness and width is passed in a cold condition through a pair of opposed forming rollers (16, 16) and the separation of the rollers is varied thereby deforming the feedstock in a varying manner along the length thereof to provide formed strip with a varying thickness. The rollers (16, 16) have parallel axes with one axis being fixed and the other axis being displaced back and forth. The thickness of the formed strip varies in a ratio of 3:1. The formed strip is heat treated in a varying manner. The amount of power supplied to heat the strip varies in accordance with the thickness of the strip. A preferred roller arrangement (15) has a pair of rollers with each roller being supported by bearings located intermediate its ends to provide an exposed end portion, with the rollers being offset and with the end portions overlapping. The overlapping end portions define a rolling region between them.

FOR THE PURPOSES OF INFORMATION ONLY

Codes used to identify States party to the PCT on the front pages of pamphlets publishing international applications under the PCT.

AT	Austria	**GB**	United Kingdom	**MR**	Mauritania
AU	Australia	**GE**	Georgia	**MW**	Malawi
BB	Barbados	**GN**	Guinea	**NE**	Niger
BE	Belgium	**GR**	Greece	**NL**	Netherlands
BF	Burkina Faso	**HU**	Hungary	**NO**	Norway
BG	Bulgaria	**IE**	Ireland	**NZ**	New Zealand
BJ	Benin	**IT**	Italy	**PL**	Poland
BR	Brazil	**JP**	Japan	**PT**	Portugal
BY	Belarus	**KE**	Kenya	**RO**	Romania
CA	Canada	**KG**	Kyrgystan	**RU**	Russian Federation
CF	Central African Republic	**KP**	Democratic People's Republic of Korea	**SD**	Sudan
CG	Congo			**SE**	Sweden
CH	Switzerland	**KR**	Republic of Korea	**SI**	Slovenia
CI	Côte d'Ivoire	**KZ**	Kazakhstan	**SK**	Slovakia
CM	Cameroon	**LI**	Liechtenstein	**SN**	Senegal
CN	China	**LK**	Sri Lanka	**TD**	Chad
CS	Czechoslovakia	**LU**	Luxembourg	**TG**	Togo
CZ	Czech Republic	**LV**	Latvia	**TJ**	Tajikistan
DE	Germany	**MC**	Monaco	**TT**	Trinidad and Tobago
DK	Denmark	**MD**	Republic of Moldova	**UA**	Ukraine
ES	Spain	**MG**	Madagascar	**US**	United States of America
FI	Finland	**ML**	Mali	**UZ**	Uzbekistan
FR	France	**MN**	Mongolia	**VN**	Viet Nam
GA	Gabon				

Title: Manufacture of Metallic Strip

THIS INVENTION relates to the manufacture of a metallic strip. More particularly, it relates to a method and apparatus for manufacturing a metallic strip having a varying thickness. Further, the metallic strip may particularly be utilised as part of a windscreen wiper blade assembly.

According to a first aspect of the invention, there is provided a method of manufacturing a metallic strip having a varying thickness, which includes

providing a supply of elongate metallic feedstock;

passing the feedstock in a cold condition through a pair of opposed forming rollers; and

varying the separation of the forming rollers during operation thereby to vary the thickness of the feedstock and provide formed strip with a varying thickness.

The feedstock may be strip-like and may have a substantially constant thickness and width.

The method may include the steps of measuring the thickness of formed strip issuing from the forming rollers and controlling the separation of the rollers in a feedback manner, in response to the measured thickness.

It will be appreciated by those skilled in the art that the term "cold condition" will refer to a temperature which will vary from metal to metal. Thus, for example, if the feedstock is steel, it may be supplied to the rollers at a temperature of below 900°C. Preferably, steel feedstock may be supplied at a temperature of between 20°C and 100°C.

The rotational axis of one of the rollers may be kept fixed while the position of the rotational axis of the other forming roller relative thereto may be varied in order to vary a gap between the two forming rollers. Instead, the position of both rotational axes may be varied.

In the event that the rotational axis of one forming roller is kept fixed and the rotational axis of the other forming roller is displaced back and forth,

the moving axis may be displaced substantially perpendicularly to the direction of travel of the strip through and between the forming rollers. If both rotational axes are displaced, they may both be displaced substantially perpendicularly to the direction of travel of the strip.

The rotational axes may be kept parallel to one another or they may be tilted with respect to one another. They are preferably kept parallel to one another.

The thickness of the formed strip may be varied in a single pass between the forming rollers.

The feedstock may be worked so that the thickness of the formed strip varies in a ratio of at least 2:1. Preferably, the feedstock is worked so that the thickness of the formed strip varies in a ratio of at least 3:1.

The thickness may be varied in a cyclical manner along the length of the strip.

The rotational speeds of the forming rollers may be substantially the same. It will be appreciated that, because the thickness of the strip is varied, the speed at which the strip exits from the forming rollers

will be different from the speed at which it enters the forming rollers. This may be accommodated by varying the rotational speed of the forming rollers so as to obtain a substantially constant output speed.

The speeds of the forming rollers may also be varied with respect to each other to impart a curvature along the formed strip.

The method may include cutting the formed strip longitudinally to vary the width thereof. The width of the longitudinally cut strip may be measured and the width of the cut varied in a feedback manner as a result of the measurement obtained.

The formed strip may be cut transversely into lengths with each length having the same variation in thickness and width along its length.

Further according to the first aspect of the invention, there is provided an apparatus for manufacturing a metallic strip having a varying thickness which includes

a supply means for providing a supply of elongate metallic feedstock;

a pair of opposed forming rollers for working the feedstock in a cold condition; and

a separation varying means for varying the separation of the forming rollers during operation thereby to vary the thickness of the feedstock and provide formed strip with a varying thickness.

A rotational axis of one of the forming rollers may be fixed while the position of a rotational axis of the other roller relative thereto may be variable so that a gap between the two forming rollers is varied, in use.

The apparatus may include a suitable drive means for driving each forming roller independently.

The apparatus may further include a measuring means for measuring the thickness of formed strip issuing from the forming rollers and a feedback control means for controlling the separation of the rollers in a feedback manner, in response to the measuring means.

A longitudinal cutting means may be provided for cutting the strip longitudinally so that the width of the formed strip varies. A measuring means may be provided to measure the width of the strip and a feedback control means may be operably connected to the measuring means to control the operation of the longitudinal cutting means in a feedback manner.

The apparatus may include a transverse cutting means for cutting the formed strip into lengths with each length having the same variation in thickness and width along its length.

According to a second aspect of the invention, there is provided a method of heat treating a metallic strip having a varying thickness, which includes

providing a metallic strip with varying thickness;

displacing the strip in a continuous manner through a heating station; and

adjusting the energy supplied by the heating station in accordance with the thickness of the strip passing therethrough.

The method may include measuring the thickness of the metallic strip and adjusting the energy supplied by the heating station, in response to the measured thickness.

Further according to the second aspect of the invention, there is provided an apparatus for heat treating a metallic strip having a varying thickness which includes

a heating station for heating the strip;

a feed means for feeding the strip through the heating station in a continuous manner; and

an adjustment means for adjusting the energy supplied by the heating station in accordance with the thickness of the strip passing therethrough.

The apparatus may include a measuring means for measuring the thickness of the metallic strip and a control means for controlling the adjustment means, in response to the measured thickness.

According to a third aspect of the invention, there is provided a forming roller arrangement which includes

a first forming roller which is rotatable about a first rotational axis and has a first and second end;

a first bearing means for rotatably supporting the first roller, the first bearing means being located between the first and second ends of the first roller to provide an exposed end portion of the first roller at its first end;

a second forming roller having a first and second end which is rotatable about a second rotational axis;

a second bearing means for rotatably supporting the second roller, the second bearing means being located between the first and second ends of the second roller to provide an exposed end portion of the second roller at its first end; and

with the rollers extending in opposite directions with their exposed end portions overlapping one another

and being spaced apart to define a rolling region between them.

The first roller may be mounted in a first carrier and the second roller may be mounted in a second carrier, with the end portions of the rollers projecting from their carriers and overlapping one another.

The first roller and the second roller may each have a drive means connected to its second end for rotatably driving it.

The first and second carriers may be displaceable with respect to one another, thereby to vary the separation of the rollers at their end portions.

The arrangement may include a support means for supporting the carriers in a displaceable manner. The support means may include a plurality of slide columns with one of the carriers being fixed to the columns and the other being slidable therealong.

Each carrier may have a carrier portion in which its respective roller is mounted, and a support portion which extends beyond the first end of its respective roller. The first and second carriers may be arranged in a complementary manner, such that the

carrier portion of the first carrier is aligned with the support portion of the second carrier and vice versa.

Two columns may pass through the carrier portion of the first carrier and may be fixed to the support portion of the second carrier and two columns may pass through the support portion of the first carrier and may be fixed to the carrier portion of the second carrier.

The arrangement may include a displacing means for displacing one of the carriers with respect to the other.

The arrangement may further include a base, the columns being secured to the base. The first carrier may be located between the second carrier and the base, with the second carrier being fixed on the columns relative to the base and with the first carrier being displaceable between them. The displacing means may be located between the base and the first carrier.

Those skilled in the art will appreciate that the rollers are rotatably supported in their carriers in a cantilever manner.

The invention is now described, by way of examples, with reference to the accompanying drawings in which:-

Figure 1 shows a schematic diagram of an apparatus, in accordance with the invention, for manufacturing a metallic strip with a varying thickness;

Figure 2 shows a three-dimensional view of a rolling mill assembly for use in the apparatus; and

Figure 3 shows a part-sectional front view of the rolling mill assembly.

In Figure 1 reference numeral 10 generally indicates an apparatus for manufacturing a metallic strip with a varying thickness in accordance with the invention.

The apparatus 10 includes a supply means 12 for providing a supply of elongate mild steel feedstock 14 which has a constant thickness and width and is strip-like. The feedstock 14 has a width of 13mm and a thickness of 1.4mm. The supply means 12 includes a rotatable coil 13 of the feedstock 14. The coil 13 is operatively connected to an input speed varying means 22. A rolling mill assembly 15 including a pair of opposed forming rollers 16 is provided for working the feedstock 14 in a cold condition. A separation varying means 18 is also provided for varying the separation of

the forming rollers 16, during operation, thereby to provide formed strip 20 with a varying thickness. The thickness of the strip 20 varies between 1,29mm and 0,30mm. The rollers are smooth and circular cylindrical in their operative regions.

The input speed varying means 22 varies the rate at which the feedstock 14 is supplied to the forming rollers 16 to control the tension in the feedstock 14, in use.

The apparatus 10 further includes a measuring means 24 for measuring the thickness of the formed strip 20 exiting from the forming rollers 16. The measuring means 24 is connected to a control means 54. The control means 54 controls the separation of the rollers 16 in a feedback manner, in response to signals received from the measuring means 24. For this purpose a pair of sensors 104 measures the distance between the rollers 16. The separation varying means 18 is in the form of a hydraulic cylinder and piston rod arrangement. A piston rod 98 of the arrangement forming part of the separation varying means 18, is connected to the lower roller 16 to apply force via the rollers 16 on the feedstock 14. The piston rod 98 is connected to, and is responsive to, signals received from the control means 54.

A heating station 28 is provided for heating the strip 20 in a continuous manner once the strip 20 has emerged from the measuring means 24. Hence, a variable power supply 30 is provided for supplying power to the heating station 28 in accordance with the thickness of the strip 20 passing therethrough. The heating station 28 is in the form of an induction heater. Thus, the energy supplied by the power supply 30, in use, to the induction heater 28 is varied by varying the frequency of the signal output from the power supply 30. The power supply 30 is connected to the control means 54 to be responsive to signals emanating therefrom.

A pair of pull rollers 32 is arranged between the measuring means 24 and the heating station 28. The strip 20 is pulled through the rollers 32. Rotation of the rollers 32 is controlled by a motor 33, the motor 33 also being connected to the control means 54.

A heat soak 34 is provided in combination with a quenching station 36 which heat treats the strip 20. As with the power supply 30, the heat soak 34 is also connected to the control means 54 to be responsive to signals emanating therefrom. The power supplied to the heat soak 34 varies and is controlled by a power adjustment device 35 and a temperature controller 39.

A further pair of pull rollers 38 is provided for drawing the strip 20 from the tempering station 36 to a strip tensioning device 44. The strip tensioning device 44 maintains the tension in the strip 20. Once again, rotation of the rollers 38 is controlled by a motor 37, the motor 37 being connected to the control means 54.

A further measuring means 40 is provided to measure the thickness of the strip 20 after it has emerged from the tensioning device 39. A laser operable width cutting means 42 is arranged downstream of the measuring means 40 to cut the strip 20 longitudinally to obtain the desired width profile of the strip 20. The measuring means 40 is connected to the width cutting means 42 via a width cutting and length cutting control means 56 which controls the width to which the strip 20 is cut.

A length cutting unit 46 is provided downstream of the laser cutting means 42 to cut the strip 20 into desired lengths. Yet a further pair of pull rollers 48 is provided between the laser cutting means 42 and the cutting unit 46. The cutting unit 46 is also connected to the control means 56. Rotation of the further pair of rollers 48 is controlled by a motor 57, the motor 57 being connected to the control means 54.

A system control means 50 is provided to control the operation of the apparatus 10. The system control means 50 is connected to the control means 54 and the width cutting and length cutting control means 56.

In use, the feedstock 14 is decoiled from the coil 13 and is drawn towards the rolling mill assembly 15. The tension within the feedstock 14 is controlled by the control means 54. The forming rollers 16 "cold work" the feedstock 14 to vary the thickness of the feedstock 14 in a predetermined manner, and provide the formed strip 20. The strip 20 passes through the measuring means 24 which measures the thickness of the strip 20. By means of the control means 54, the piston rod 98 is utilised to vary continuously and cyclically the distance between the rollers 16 and thereby to control the thickness of the strip 20. The feedstock 14 is supplied to the rollers at a temperature of less than 900°C, and preferably at about 25°C.

Hereafter, the strip 20 passes into the pair of pull rollers 32 which direct the strip 20 into the induction heater 28. The speed of the pull rollers 32 is controlled by the control means 54. The induction heater is energised by means of the variable power supply 30 in dependence of the thickness of the strip 20. This process is governed by the control means 54 which

receives signals from the measuring means 24 and transmits suitable signals to the power supply 30.

The strip 20 then enters the heat soak 34 and thereafter, the quenching station 36. The induction heater 28, the heat soak 34 and the tempering station 36 together serve to heat treat the strip 20. The operation of the heat soak 34 is also governed by the control means 54.

The pull rollers 38 draw the strip 20 from the quenching station 36 to the further measuring means 40 via the tensioning device 44 which maintains the required tension in the strip 20. The speed of the pull rollers 38 is governed by the control means 54 and by the motor 37.

Hereafter, the strip 20 passes through the further measuring means 40 which feeds data to the laser cutting means 42 via the width cutting and length cutting control means 56 in order that the strip 20 may be cut to the required width which varies in a predetermined manner. The pull rollers 48 feed the strip 20 at a speed governed by the control means 54 from the laser cutting means 42 to the length cutting unit 46 which is also controlled by the width cutting and length cutting control means 56 to cut the strip 20 into the required lengths of 450mm each. Each length has the same

thickness and width profile and is intended to be a support beam for a windscreen wiper. It will thus be appreciated that the thickness and width of the strip 20 varies in a cyclical manner along its length.

The dimensions of each length are as follows:-

length = 450mm

thickness at the centre of each length = 1,29mm

thickness at the ends of each length = 0,30mm

width at the centre = 11mm; and

width at the ends = 6mm

Each length tapers uniformly and continuously in both thickness and width in a straight line manner from its centre to its ends.

Referring now to Figures 2 and 3 of the drawings, the rolling mill assembly 15 is shown.

The rolling mill assembly 15 includes a first forming roller 16.1 which is rotatable about a first rotational axis and has a first end 64 and a second end 66. A pair of cylindrical roller bearings 68 rotatably support the first roller 16.1. The bearings 68 are located between the first and second ends 64, 66 of the roller 16.1 to provide an exposed end portion 69 of the first roller 16.1 at its first end 64.

A second forming roller 16.2 is provided having a first end 72 and a second end 74, the roller 16.2 being rotatable about a second rotational axis. A pair of cylindrical roller bearings 76 rotatably supports the second roller 16.2. The bearings 76 are located between the first and second ends 72, 74 of the second roller 16.2 to provide an exposed end portion 78 of the second roller 16.2 at its first end 72. The rollers 16.1, 16.2 extend in opposite directions with their exposed end portions 69, 78 overlapping and being spaced apart to define a rolling region 80 between them. The end portions 69, 78 are smooth and circular cylindrical.

The first roller 16.1 is rotatably mounted, via the bearings 68, in a first carrier 82 and the second roller 16.2 is rotatably mounted, via the bearings 76, in a second carrier 84. The end portions 69,78 of the rollers 16.1, 16.2 project from their carriers 82, 84 respectively and overlap one another.

The first roller 16.1 is driven by a drive means in the form of an electric motor 86. The motor 86 is connected to the first roller 16.1 at its second end 66. The second roller 16.2 has a similar electric motor 88 connected to its second end 74.

Axial shaft seals 92 are provided to minimise damage to the roller bearings 68 and 76 by the ingress of dirt.

The first and second carriers 82, 84 are displaceable with respect to one another, thereby to vary the separation of the rollers 62, 70 at their end portions 69, 78, thereby varying the gap between them.

A support base 94 is provided on which the first carrier 82 is mounted. The first carrier 82 is fixedly mounted on the support base 94 by means of four slide columns 96 to which the first carrier 82 is fixed. The second carrier 84 is slidably mounted on the slide columns 96 and the piston rod 98 is fixed to the second carrier 84 to permit the second carrier 84 to be hydraulically displaced with respect to the first carrier 82.

Each carrier 82, 84 has a carrier portion 100 in which its respective roller 16.1, 16.2 is mounted, and a support portion 102 which extends beyond the first end 64, 72 of its respective roller 16.1, 16.2. In each carrier 82, 84 two of the slide columns 96 pass through the carrier portion 100 and the other two columns 96 pass through the support portion 102.

The first and second carriers 82, 84 are arranged in a complementary manner, such that the carrier portion 100 of the first carrier 82 is aligned with the support portion 102 of the second carrier 84 and vice versa.

The applicant believes that this invention provides an effective method and apparatus for the production of heat treated metal strip. Further, the applicant believes that the metal strip produced as a result of the application of this invention will have particular, but not necessarily exclusive, application as part of a windscreen wiper blade assembly for automotive and other applications.

CLAIMS:

1. A method of manufacturing a metallic strip having a varying thickness, which includes

providing a supply of elongate metallic feedstock;

passing the feedstock in a cold condition through a pair of opposed forming rollers; and

varying the separation of the forming rollers during operation thereby to vary the thickness of the feedstock and provide formed strip with a varying thickness.

2. The method as claimed in Claim 1, which includes the steps of measuring the thickness of formed strip issuing from the forming rollers and controlling the separation of the rollers in a feedback manner, in response to the measured thickness.

3. The method as claimed in Claim 1 in which the feedstock is supplied to the rollers at a temperature of less than 900°C.

4. The method as claimed in Claim 3, in which the feedstock is supplied at a temperature of between 20°C and 100°C.

5. The method as claimed in Claim 1, in which a rotational axis of one of the rollers is kept fixed

while the position of the rotational axis of the other forming roller relative thereto is varied in order to vary a gap between the two forming rollers.

6. The method as claimed in Claim 1, in which the thickness of the formed strip is varied in a single pass between the forming rollers.

7. The method as claimed in Claim 1, in which the thickness of the formed strip is varied in a cyclical manner.

8. The method as claimed in Claim 1, in which the feedstock is worked so that the thickness of the formed strip varies in a ratio of at least 2:1.

9. The method as claimed in Claim 8, in which the feedstock is worked so that the thickness of the formed strip varies in a ratio of at least 3:1.

10. The method as claimed in Claim 1, in which the rotational speeds of the forming rollers are substantially the same.

11. The method as claimed in Claim 1, which includes cutting the formed strip longitudinally to vary the width thereof.

12. The method as claimed in Claim 11, which includes measuring the width of the longitudinally cut strip and varying the width of the cut in a feedback manner as a result of the measurement obtained.

13. The method as claimed in Claim 1, which includes the step of cutting the formed strip transversely into lengths with each length having the same variation in thickness and width along its length.

14. An apparatus for manufacturing a metallic strip having a varying thickness which includes

a supply means for providing a supply of elongate metallic feedstock;

a pair of opposed forming rollers for working the feedstock in a cold condition; and

a separation varying means for varying the separation of the forming rollers during operation thereby to vary the thickness of the feedstock and provide formed strip with a varying thickness.

15. The apparatus as claimed in Claim 14, in which a rotational axis of one of the forming rollers is fixed while the position of a rotational axis of the other roller relative thereto is variable so that a gap between the two forming rollers may be varied.

16. The apparatus as claimed in Claim 14, which includes a drive means for rotatably driving each forming roller independently.

17. The apparatus as claimed in Claim 14, which includes a measuring means for measuring the thickness of formed strip issuing from the forming rollers and a feedback control means for controlling the separation of the rollers in a feedback manner, in response to the measuring means.

18. The apparatus as claimed in Claim 14, which includes a longitudinal cutting means for cutting the strip longitudinally so that the width of the formed strip varies.

19. The apparatus as claimed in Claim 18, which includes a measuring means for measuring the width of the strip and a feedback control means responsive to the measuring means for controlling operation of the longitudinal cutting device in a feedback manner.

20. The apparatus as claimed in Claim 14, which includes a transverse cutting means for cutting the formed strip into lengths with each length having the same variation in thickness and width along its length.

21. A method of heat treating a metallic strip having a varying thickness, which includes

providing a metallic strip with varying thickness;

displacing the strip in a continuous manner through a heating station; and

adjusting the energy supplied by the heating station in accordance with the thickness of the strip passing therethrough.

22. The method as claimed in Claim 21 which includes measuring the thickness of the metallic strip and adjusting the energy supplied by the heating station, in response to the measured thickness.

23. An apparatus for heat treating a metallic strip having a varying thickness which includes

a heating station for heating the strip;

a feed means for feeding the strip through the heating station in a continuous manner; and

an adjustment means for adjusting the energy supplied by the heating station in accordance with the thickness of the strip passing therethrough.

24. The apparatus as claimed in Claim 23 which includes a measuring means for measuring the thickness of the metallic strip and a control means for controlling the adjustment means, in response to the measured thickness.

25. A forming roller arrangement which includes

a first forming roller which is rotatable about a first rotational axis and has a first and second end;

a first bearing means for rotatably supporting the first roller, the first bearing means being located between the first and second ends of the first roller to provide an exposed end portion of the first roller at its first end;

a second forming roller having a first and second end which is rotatable about a second rotational axis;

a second bearing means for rotatably supporting the second roller, the second bearing means being located between the first and second ends of the second roller to provide an exposed end portion of the second roller at its first end; and

with the rollers extending in opposite directions with their exposed end portions overlapping one another and being spaced apart to define a rolling region between them.

26. The arrangement as claimed in Claim 25, in which the first roller is mounted in a first carrier and the second roller is mounted in a second carrier, with the end portions of the rollers projecting from their carriers and overlapping one another.

27. The arrangement as claimed in Claim 25, in which the first roller and the second roller each has a

drive means connected to its second end for rotatably driving it.

28. The arrangement as claimed in Claim 26, in which the first and second carriers are displaceable with respect to one another, thereby to vary the separation of the rollers at their end portions.

29. The arrangement as claimed in Claim 28, which includes a support means for supporting the carriers in a displaceable manner.

30. The arrangement as claimed in Claim 29, in which the support means includes a plurality of slide columns with one of the carriers being fixed to the columns and the other being slidable therealong.

31. The arrangement as claimed in Claim 26, in which each carrier has a carrier portion in which its respective roller is mounted, and a support portion which extends beyond the first end of its respective roller.

32. The arrangement as claimed in Claim 31, in which the first and second carriers are arranged in a complementary manner, such that the carrier portion of the first carrier is aligned with the support portion of the second carrier and vice versa.

33. The arrangement as claimed in Claim 32, in which two columns pass through the carrier portion of the first carrier and are fixed to the support portion of the second carrier and two columns pass through the support portion of the first carrier and are fixed to the carrier portion of the second carrier.

34. The arrangement as claimed in Claim 28, which includes a displacing means for displacing one of the carriers with respect to the other.

35. The arrangement as claimed in Claim 30, which includes a base, the columns being secured to the base.

36. The arrangement as claimed in Claim 35, in which the first carrier is located between the second carrier and the base, with the second carrier being fixed on the columns relative to the base and with the first carrier being displaceable between them.

37. The arrangement as claimed in Claim 36, which includes a displacing means located between the base and the first carrier for displacing the first carrier towards and away from the second carrier.

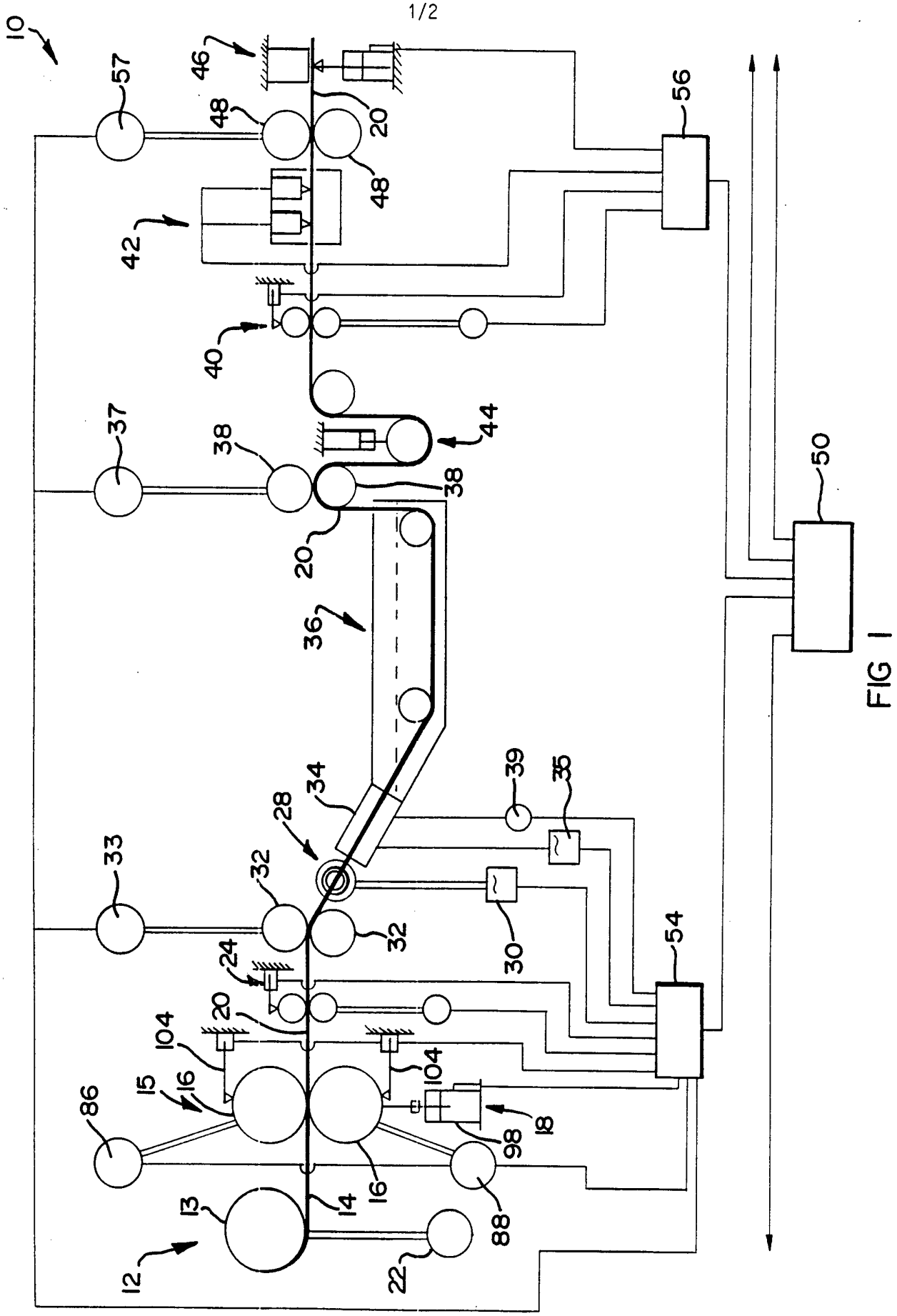
10
57
46
48
20
48
56
42
40
37
38
44
38
50
20
36
39
35
34
28
33
32
32
30
54
24
20
104
104
15
16
86
18
98
16
14
13
88
12
22

FIG 1

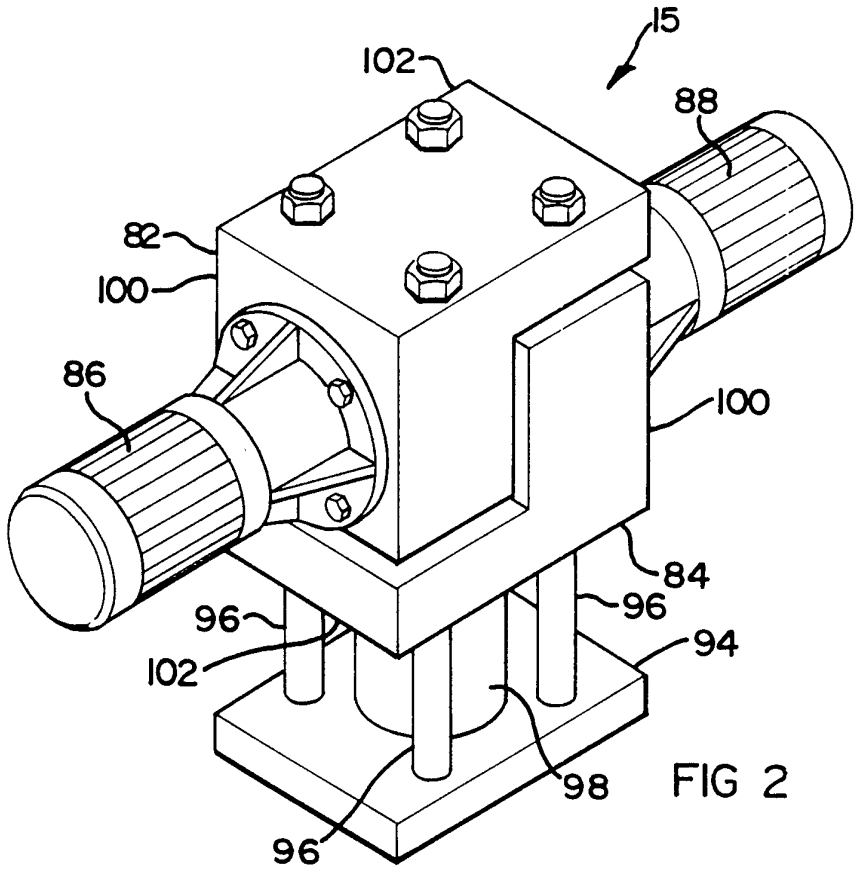
15
102
88
82
100
86
100
84
96
96
94
102
98
96

FIG 2

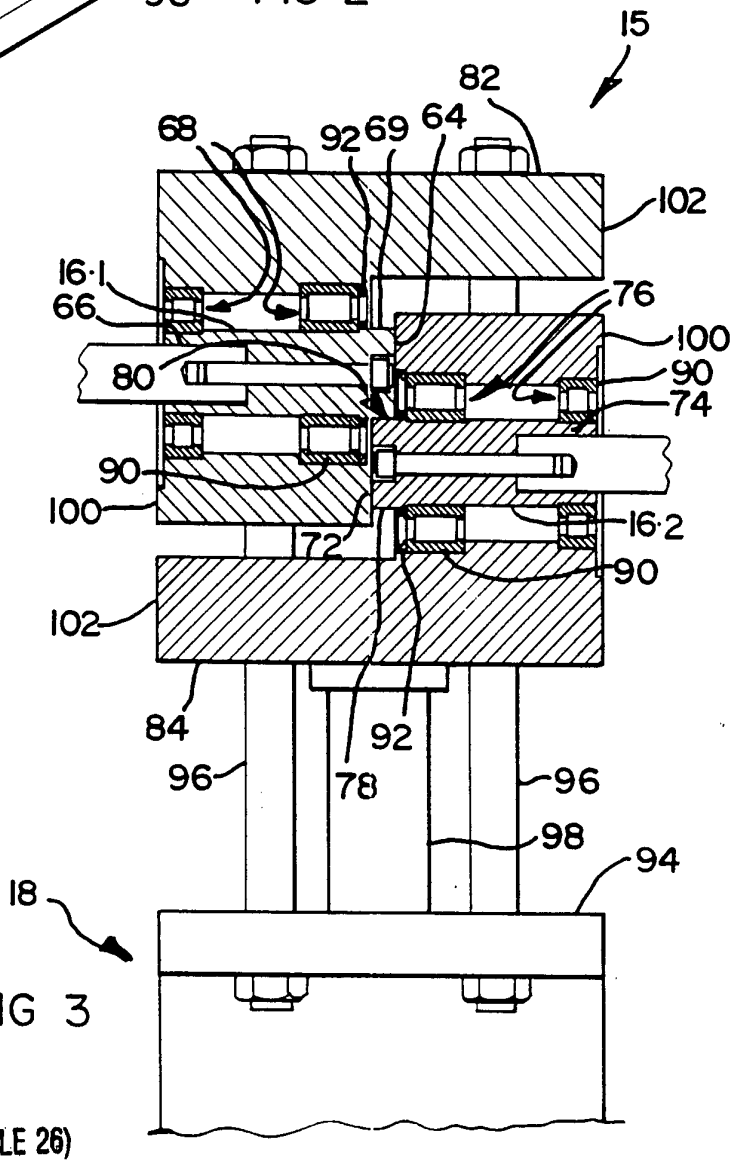
15
82
68
92
69
64
102
16·1
66
76
100
80
90
74
90
100
16·2
72
90
102
84
92
96
78
96
98
94
18

FIG 3

INTERNATIONAL SEARCH REPORT

Inter nal Application No
PCT/GB 94/00276

A. CLASSIFICATION OF SUBJECT MATTER
IPC 5 B21B37/14 B21B37/10 B21B13/00 B21B37/00 B21B15/00

According to International Patent Classification (IPC) or to both national classification and IPC

B. FIELDS SEARCHED

Minimum documentation searched (classification system followed by classification symbols)
IPC 5 B21B B21H

Documentation searched other than minimum documentation to the extent that such documents are included in the fields searched

Electronic data base consulted during the international search (name of data base and, where practical, search terms used)

C. DOCUMENTS CONSIDERED TO BE RELEVANT

Category °	Citation of document, with indication, where appropriate, of the relevant passages	Relevant to claim No.
X	FR,A,1 180 375 (AKTIENGESELLSCHAFT FÜR UNTERNEHMUNGEN DER EISEN- UND STAHLINDUSTRIE) 3 June 1959 see page 1, right column, line 12 - line 32; figure	25,26, 28,34
Y		27,29
A		30-32

Y	PATENT ABSTRACTS OF JAPAN vol. 7, no. 41 (M-194) 18 February 1983 & JP,A,57 190 703 (TADAO SASAKI) 24 November 1982 see abstract	27

Y	GB,A,1 427 440 (DAVY-LOEWY LTD) 10 March 1976	29
A	see the whole document	30,31, 33,36,37

	-/--	

[X] Further documents are listed in the continuation of box C.

[X] Patent family members are listed in annex.

° Special categories of cited documents :

"A" document defining the general state of the art which is not considered to be of particular relevance

"E" earlier document but published on or after the international filing date

"L" document which may throw doubts on priority claim(s) or which is cited to establish the publication date of another citation or other special reason (as specified)

"O" document referring to an oral disclosure, use, exhibition or other means

"P" document published prior to the international filing date but later than the priority date claimed

"T" later document published after the international filing date or priority date and not in conflict with the application but cited to understand the principle or theory underlying the invention

"X" document of particular relevance; the claimed invention cannot be considered novel or cannot be considered to involve an inventive step when the document is taken alone

"Y" document of particular relevance; the claimed invention cannot be considered to involve an inventive step when the document is combined with one or more other such documents, such combination being obvious to a person skilled in the art.

"&" document member of the same patent family

Date of the actual completion of the international search	Date of mailing of the international search report
25 May 1994	15. 06. 94

Name and mailing address of the ISA	Authorized officer
European Patent Office, P.B. 5818 Patentlaan 2 NL - 2280 HV Rijswijk Tel. (+ 31-70) 340-2040, Tx. 31 651 epo nl, Fax: (+ 31-70) 340-3016	Plastiras, D

Form PCT/ISA/210 (second sheet) (July 1992)

INTERNATIONAL SEARCH REPORT

Inter ional Application No
PCT/GB 94/00276

C.(Continuation) DOCUMENTS CONSIDERED TO BE RELEVANT

Category °	Citation of document, with indication, where appropriate, of the relevant passages	Relevant to claim No.
Y	FR,A,2 193 680 (NHK SPRING CO.,LTD) 22 February 1974 see page 2, line 24 - page 3, line 1 see page 4, line 9 - line 24; figures	1,2,5,7, 13-15, 17,20
Y	FR,A,2 104 876 (NIPPON KOKAN K.K.) 21 April 1972 see page 1, line 4 - line 18; figures	1,2,5,7, 13-15, 17,20
A	US,A,1 652 860 (HEINLE) 13 December 1927 see claims; figures	1,11,12, 14,18,19
A	DE,A,29 30 005 (AICHI STEEL WORKS, LTD) 19 June 1980 see page 34, line 1; figures 1,9,17 see page 48, line 25 - page 49, line 25 see page 58, line 30 - page 59, line 20 see page 72, line 10 - page 73, line 18	1-7, 11-15, 17-20
A	PATENT ABSTRACTS OF JAPAN vol. 8, no. 104 (M-296) 16 May 1984 & JP,A,59 016 604 (KAWASAKI) 27 January 1984 see abstract	1,10,14, 16
A	PATENT ABSTRACTS OF JAPAN vol. 12, no. 257 (M-719) 20 July 1988 & JP,A,63 040 604 (SUMITOMO) 22 February 1988 see abstract	21-24
A	PATENT ABSTRACTS OF JAPAN vol. 9, no. 111 (M-379) 15 May 1985 & JP,A,59 232 606 (KAWASAKI) 27 December 1984 see abstract	21-24
A	US,A,3 190 098 (WILSON) 22 June 1965 see the whole document	25-37

INTERNATIONAL SEARCH REPORT

Inte onal Application No
PCT/GB 94/00276

Patent document cited in search report	Publication date	Patent family member(s)	Publication date
FR-A-1180375		NONE	
GB-A-1427440	10-03-76	US-A- 3946587	30-03-76
FR-A-2193680	22-02-74	JP-A- 49030736	19-03-74
		JP-B- 52014822	25-04-77
		JP-C- 934570	30-11-78
		JP-A- 50026755	19-03-75
		JP-B- 53011959	25-04-78
		DE-A- 2336459	31-01-74
		GB-A- 1389626	03-04-75
FR-A-2104876	21-04-72	DE-A,B,C 2142859	02-03-72
		GB-A- 1326157	08-08-73
		US-A- 3760621	25-09-73
US-A-1652860		NONE	
DE-A-2930005	19-06-80	JP-C- 1231834	26-09-84
		JP-A- 55016787	05-02-80
		JP-B- 58005727	01-02-83
		JP-C- 1310774	11-04-86
		JP-A- 55054122	21-04-80
		JP-B- 59001531	12-01-84
		JP-C- 1198614	21-03-84
		JP-A- 55064921	16-05-80
		JP-B- 58005728	01-02-83
		JP-C- 1249339	25-01-85
		JP-A- 55064922	16-05-80
		JP-B- 59026369	27-06-84
		JP-C- 1198618	21-03-84
		JP-A- 55068116	22-05-80
		JP-B- 58005729	01-02-83
		JP-C- 1084117	25-02-82
		JP-A- 55086617	30-06-80
		JP-B- 56026481	18-06-81
		CA-A- 1122305	20-04-82
		DE-C- 2954509	23-05-90
		US-A- 4248072	03-02-81

INTERNATIONAL SEARCH REPORT

Information on patent family members

Int ional Application No
PCT/GB 94/00276

Patent document cited in search report	Publication date	Patent family member(s)	Publication date
US-A-3190098		FR-A- 1265726 GB-A- 956551	