Dec. 24, 1940. O. C. GRUENDER 2,225,909

SCREEN

Filed June 11, 1938 7 Sheets-Sheet 1

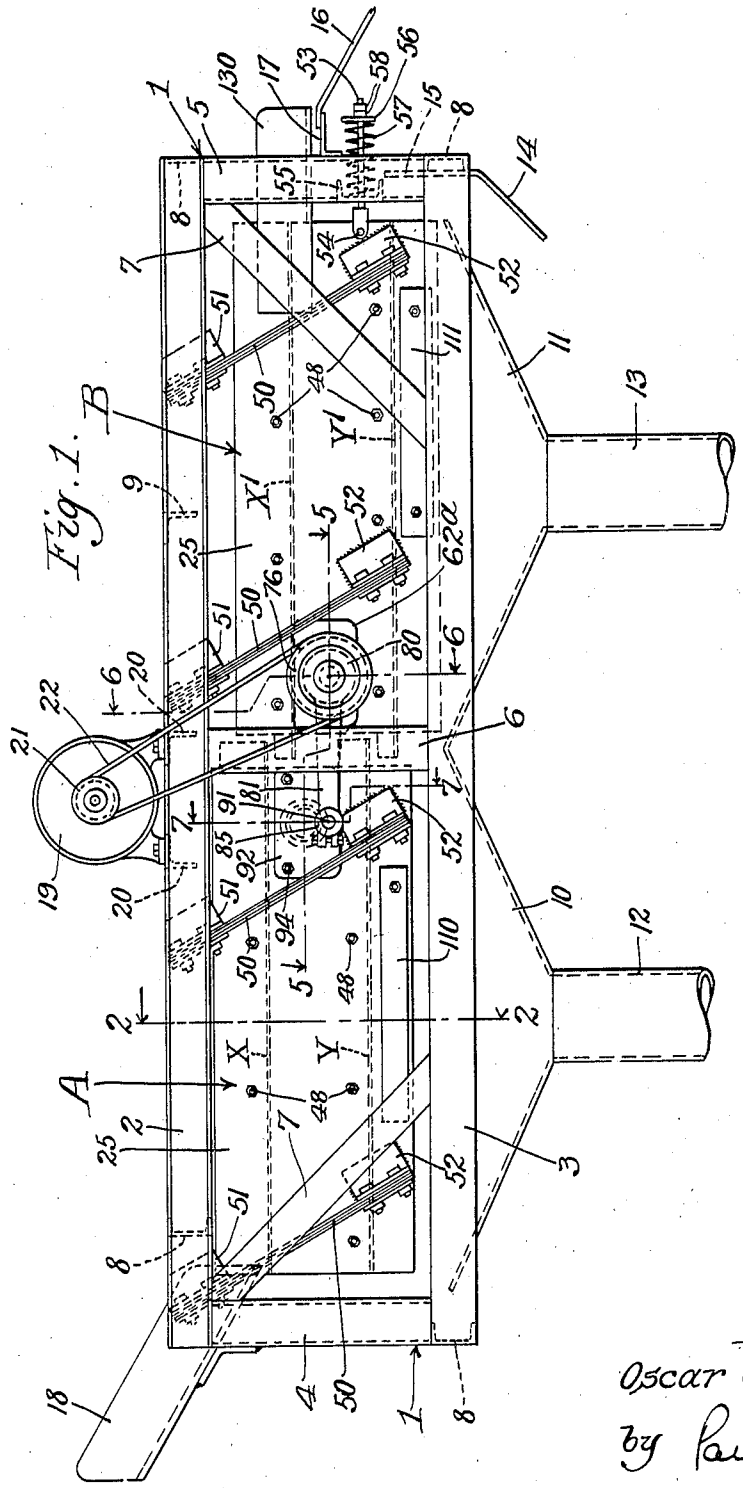

Inventor
Oscar C. Gruender
by Parker & Carter
Attorneys.

Dec. 24, 1940. O. C. GRUENDER 2,225,909

SCREEN

Filed June 11, 1938 7 Sheets-Sheet 2

Fig. 2.

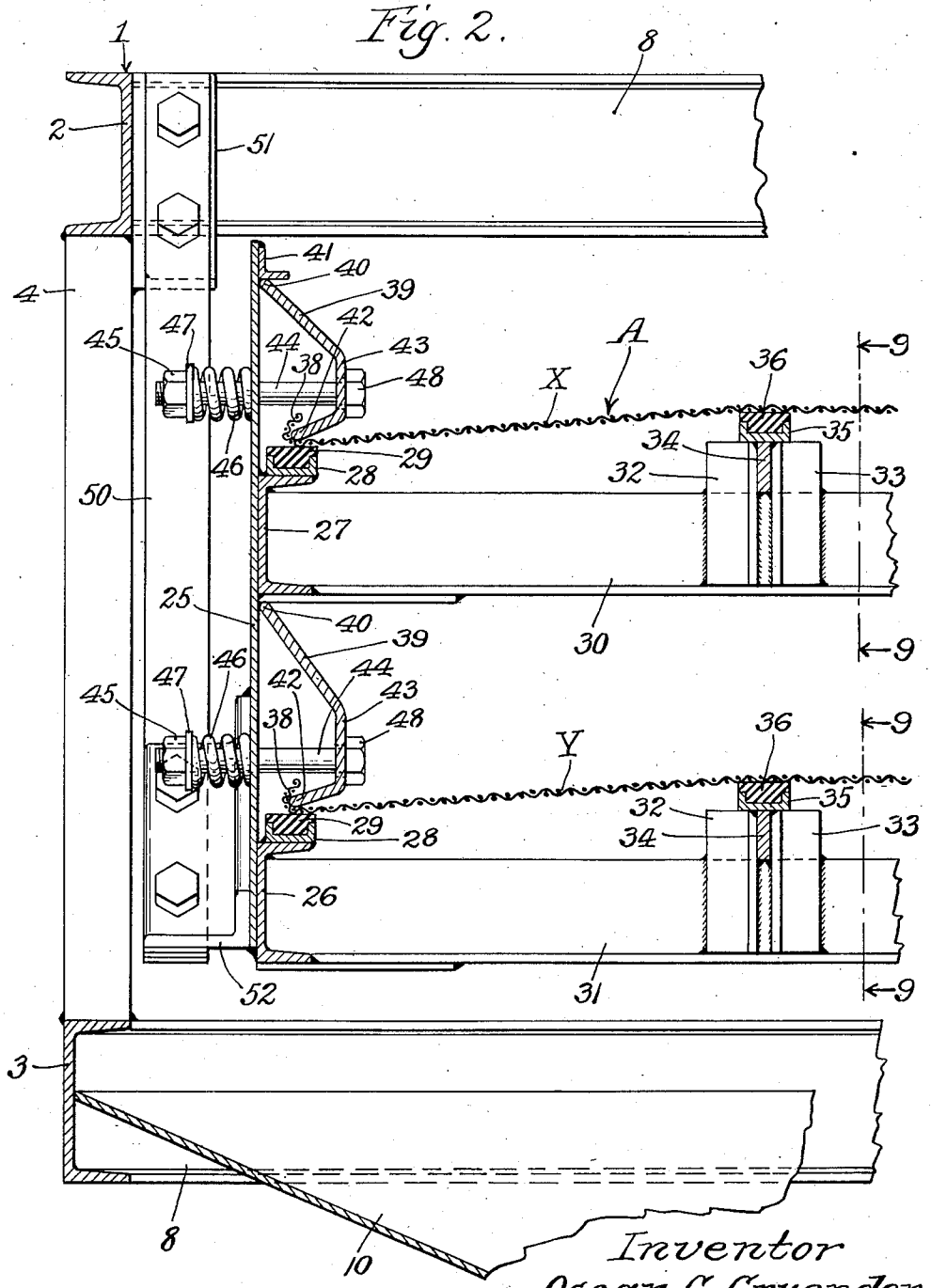

Inventor
Oscar C. Gruender
by Parker & Carter
Attorneys.

Dec. 24, 1940. O. C. GRUENDER 2,225,909

SCREEN

Filed June 11, 1938 7 Sheets-Sheet 3

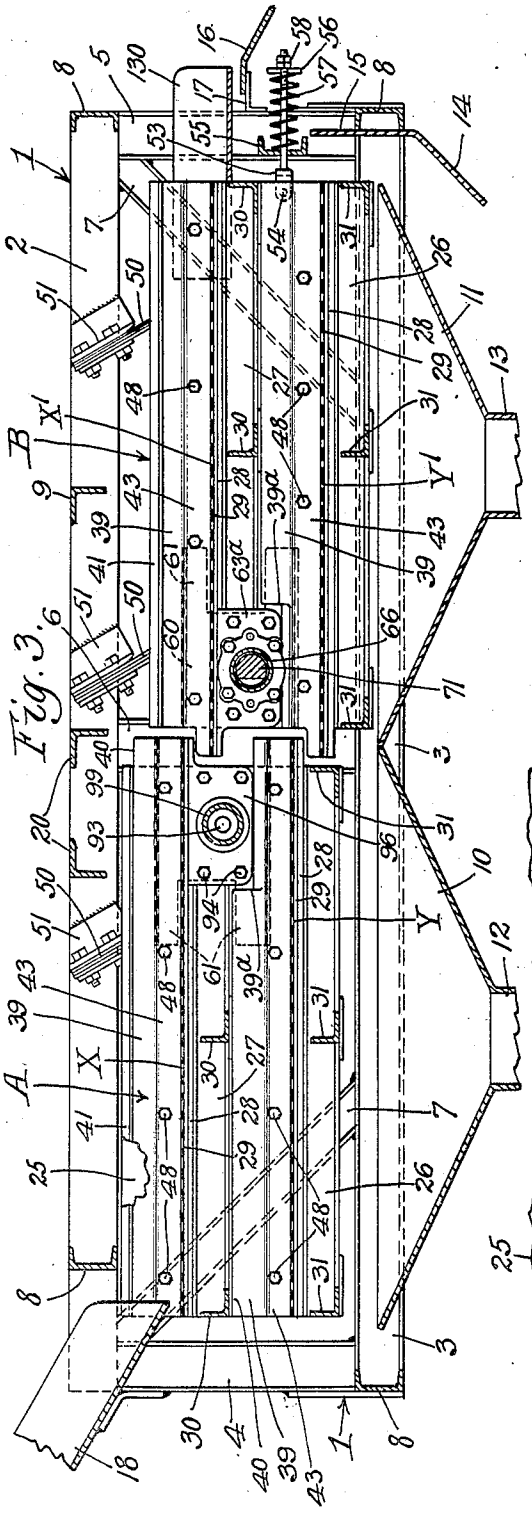

Fig. 3.

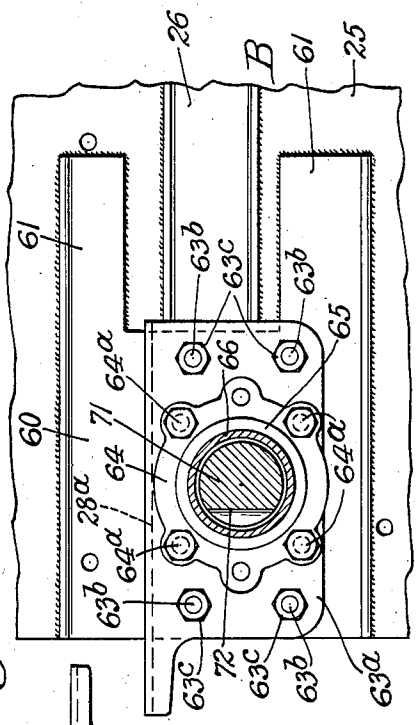

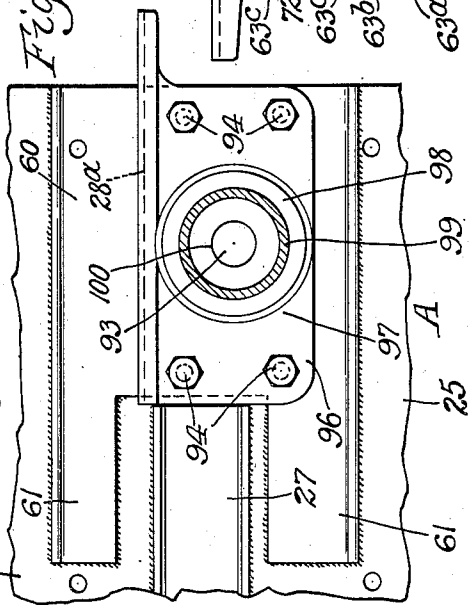

Fig. 4.

Inventor
Oscar C. Gruender
by Parker & Carter
Attorneys.

SCREEN

Filed June 11, 1938 7 Sheets-Sheet 4

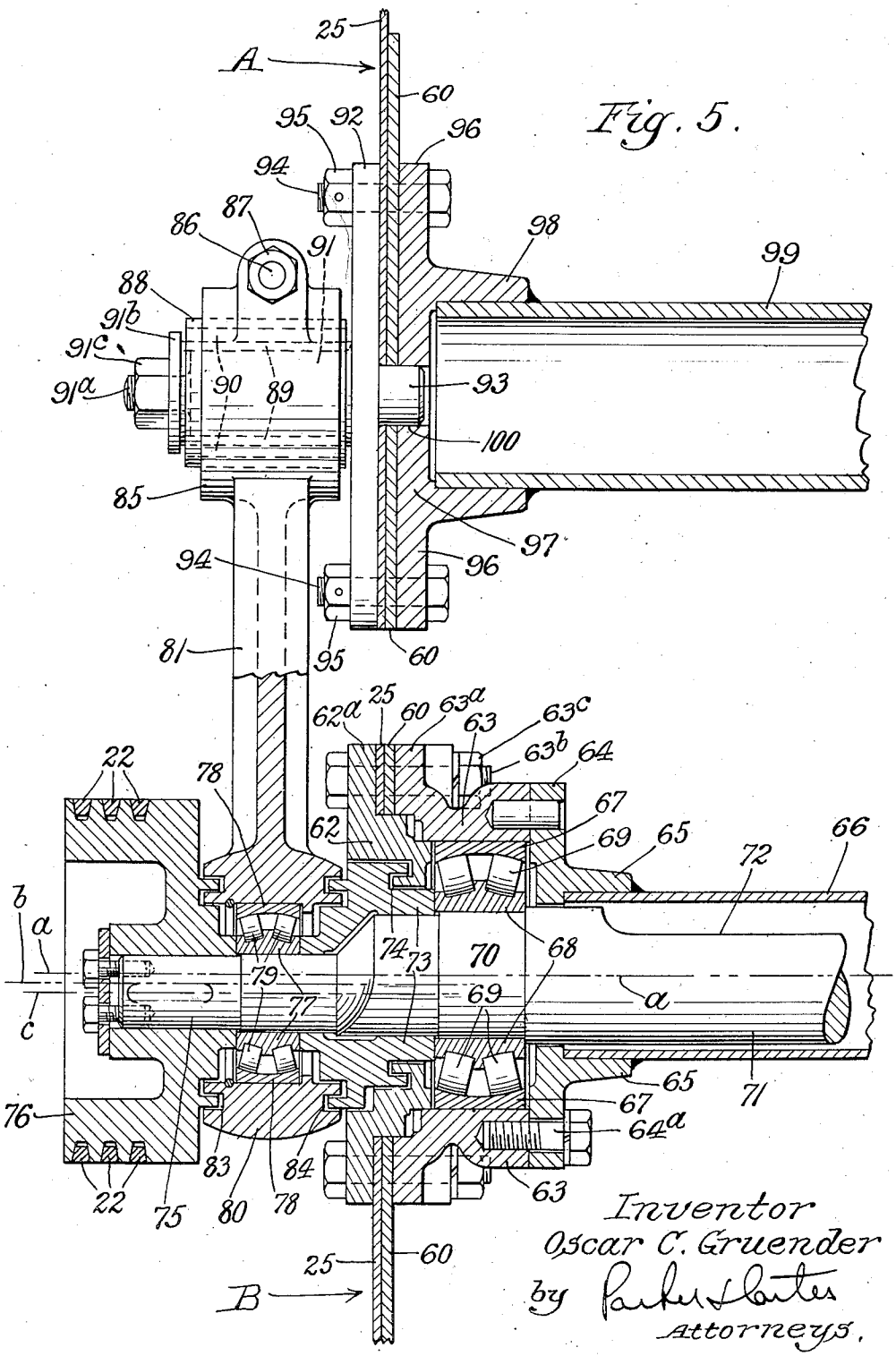

SCREEN

Filed June 11, 1938 7 Sheets-Sheet 5

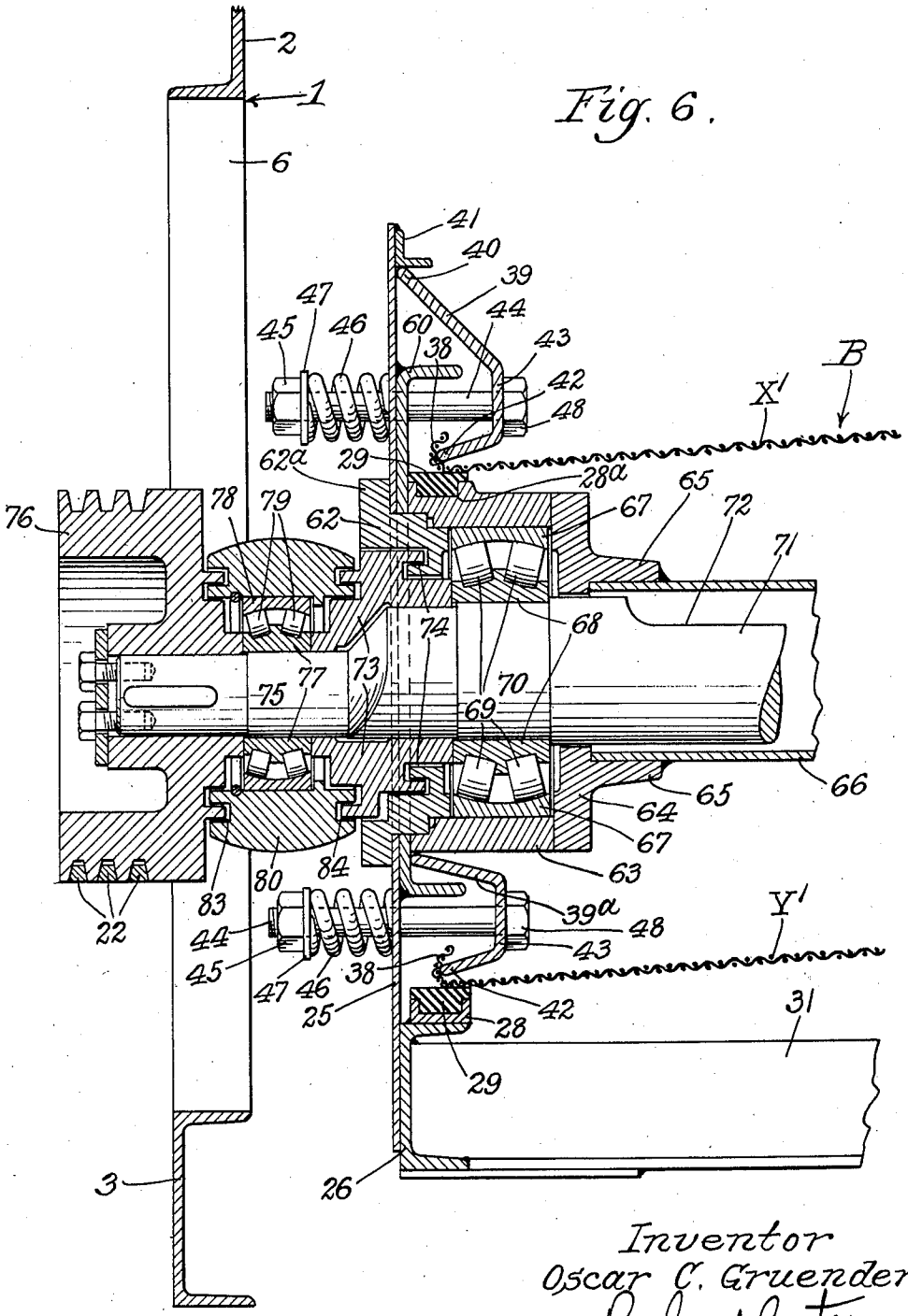

Inventor
Oscar C. Gruender
by Parker & Carter
Attorneys.

Dec. 24, 1940. O. C. GRUENDER 2,225,909

SCREEN

Filed June 11, 1938 7 Sheets-Sheet 6

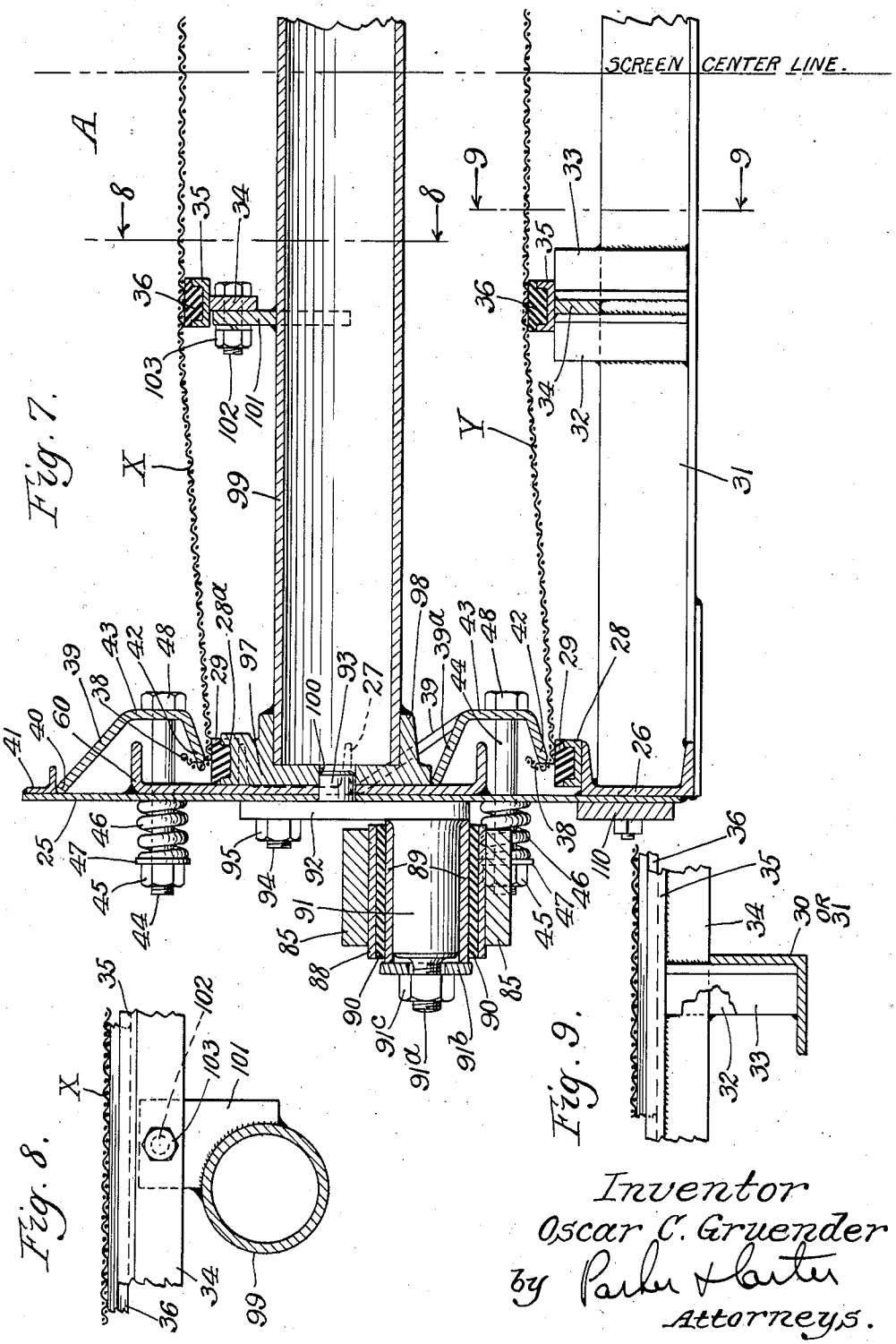

Inventor
Oscar C. Gruender
by Parker & Carter
Attorneys.

Dec. 24, 1940. O. C. GRUENDER 2,225,909

SCREEN

Filed June 11, 1938 7 Sheets-Sheet 7

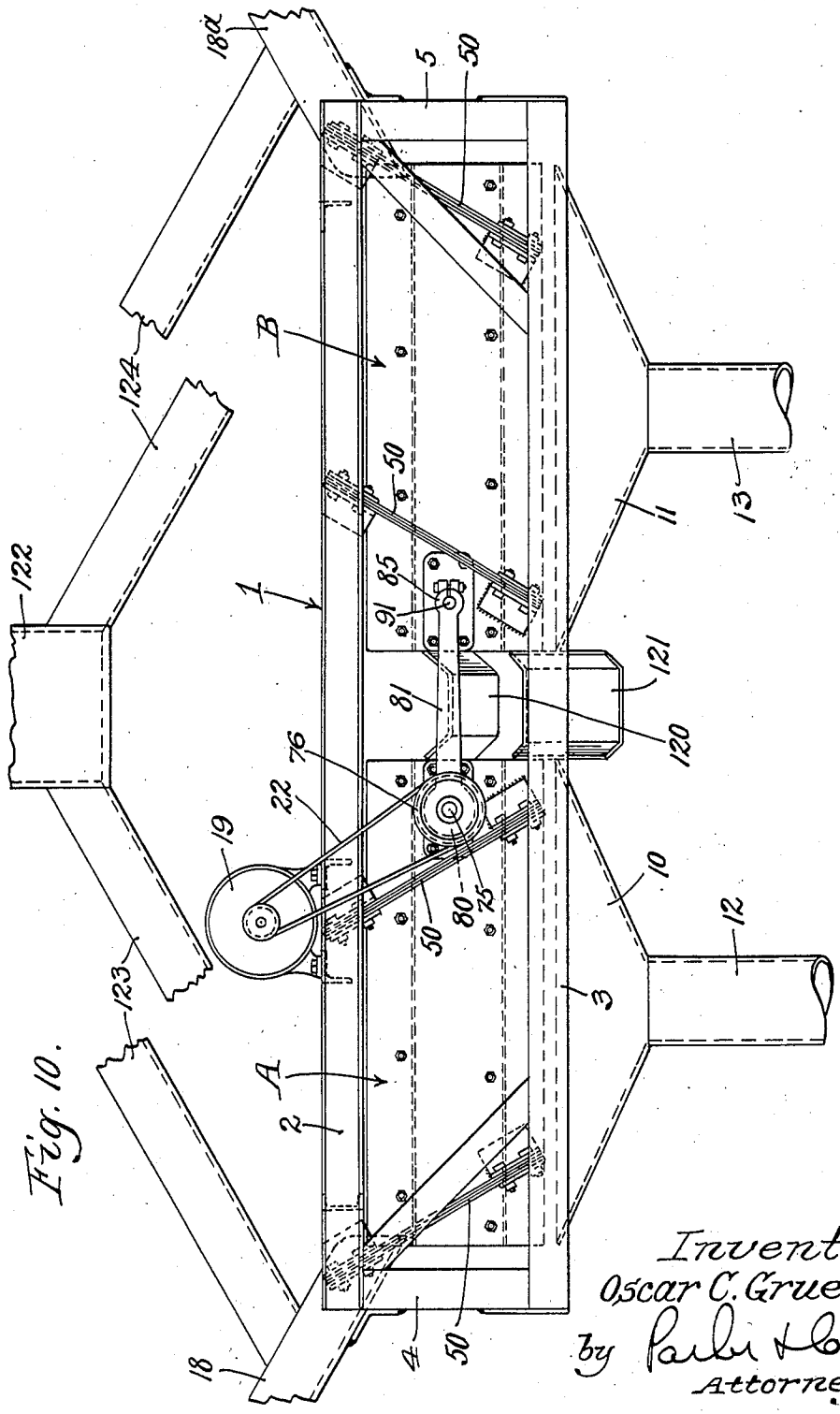

Fig. 10.

Inventor
Oscar C. Gruender
by Parker & Carter
Attorneys.

Patented Dec. 24, 1940 2,225,909

UNITED STATES PATENT OFFICE

2,225,909

SCREEN

Oscar C. Gruender, Milwaukee, Wis., assignor to Nordberg Manufacturing Co., Milwaukee, Wis., a corporation of Wisconsin

Application June 11, 1938, Serial No. 213,193

8 Claims. (Cl. 209—311)

My invention relates to improvements in screens and has for one purpose the provision of a screen which shall be simple to manufacture, compact, and efficient in use.

Another purpose is the provision of improved means for providing a screen of substantial length in which a plurality of separate units are employed.

Another purpose is the provision of an improved screen frame or deck.

Another purpose is the provision of improved means for mounting screen cloth or mesh on a screen deck.

Another purpose is the provision of improved means for vibrating a screen.

Another purpose is the provision of an improved multiple screen in which, in a plurality of sections arranged end to end, material from the upper level of one section may be fed to the upper level of the next, and material from the lower level of the first section may be fed to the lower level of the next.

Another purpose is the provision of an improved screen in which a plurality of sections feed the material under the screen in opposite directions, and preferably in such fashion as to cause the discharge from a plurality of sections to join at a unitary discharge area.

Other purposes will appear from time to time in the course of the specification and claims.

I illustrate my invention more or less diagrammatically in the accompanying drawings, wherein:

Figure 1 is a side elevation;

Figure 2 is a section on an enlarged scale along the line 2—2 of Figure 1;

Figure 3 is a longitudinal vertical section through the structure shown in Figure 1;

Figure 4 is a section similar to Figure 3 of the middle portion and on an enlarged scale;

Figure 5 is a section on the line 5—5 of Figure 1 on an enlarged scale;

Figure 6 is a section on an enlarged scale along the line 6—6 of Figure 1;

Figure 7 is a section on an enlarged scale on the line 7—7 of Figure 1;

Figure 8 is a detail section on the line 8—8 of Figure 7;

Figure 9 is a detail section on the lines 9—9 of Figures 2 and 7; and

Figure 10 is a side elevation of a modified form.

Like parts are indicated by like symbols throughout the specification and drawings.

Referred to the drawings, 1 generally indicates a normally fixed screen frame which may include horizontal top frame members or channels 2, horizontal bottom frame members or channels 3, vertical end frame members 4, 5, intermediate vertical frame members 6, inclined braces 7, and screen frame members or channels 8, and intermediate transverse members, channels or angles 9. 10, 11 indicate any suitable hopper members having downspouts or discharge members 12, 13. 14 is a terminal deflector or delivery member having an upper vertical portion 15, whereby material discharged from the lower level of the end screen may be downwardly delivered. 16 indicates an additional delivery chute for the upper level of the end screen, shown as mounted on a transverse angle 17 at the discharge end of the frame 1. 18 is any suitable feed spout for the feed end of the frame whereby material is delivered to the upper end of the first screen section.

Referring to Figure 1, I illustrate two screen sections generally indicated as A and B, A being the screen section adjacent the spout 18, and initially receiving the feed, and B being the terminal screen section which is discharged to the members 14 and 16. It will be understood, however, that whereas I show two sections, a large number may under some circumstances be employed. 19 indicates any suitable motor or power source herein shown as mounted on the screen frame 1 itself, upon transversely extending angles 20. The motor pulley 21 through a belt 22 drives a vibrating unit on one of the screen sections, shown in Figure 1 as section B, which driving unit will later be described.

Referring to the screen sections, and first to section A as shown for example in Figure 2, I may employ a side plate or plates 25, of which only one is shown in Figure 2. It will be understood, however, that the two sides of the screen section may be substantially identical. Extending longitudinally along the sides of the section are inner channels 26 and 27, which may be welded or otherwise secured in side plates 25, and at the upper flange of each channel is positioned a smaller channel 28, in which is carried a pad 29 of rubber or suitable yielding and compressible material, herein shown as filling the space between the flanges of the channel 28 and extending upwardly above the upper edges of said flanges. Transverse frame members 30, 31 are employed extending between side plates 25 and channels 26, 27.

As shown in detail in Figure 9, taken in connection with Figures 2 and 7, I illustrate upstanding angles 32, 33 placed back to back on the members 30 or 31 and extending between them a longitudinal member 34, upon the top of which is mounted an upwardly open channel 35 having therein a

pad 36 of yielding compressible material similar to the side pads 28 and running lengthwise of the screen. Two or more may be employed. The screen cloth may be laid over the pads 36 and is preferably formed with an inwardly turned hook-like edge portion 38 which overlies the side pads 29.

39 indicates a lever plate, the toe of which as at 40 abuts against a small angle iron 41 secured to the upper inner face of the side plate 25. The lower toe 42 sets within the recurved portion 38 of the screen edge. An intermediate portion 43 is apertured to receive the bolt 44 with its outer nut 45. 46 is a coil spring compressed between the nut 45 or its washer 47 and the outer face of the plate 25, whereby the member 44 with its head 48 draws the member 39 inwardly and somewhat downwardly and compresses the edge portion 38 of the screen cloth against the upper surface of the pad 28. The result is a stretching and a very firm hold on the screen cloth. The lower screen assembly is the same as above described, except that the toe 40 abuts against the lower flange of the channel iron 27. It will be observed that the mesh is at all times mounted upon and resting upon pads of yielding compressible material, and is not at any point gripped between opposed metallic surfaces. The compression may be readily adjusted by rotation of the nut 45. The screen may readily be removed by slacking the nuts 45 and removing the bolts 44.

The structure of the two screens A and B is substantially the same and need not be separately described. Each section is mounted upon a plurality of compound leaf springs generally indicated at 50 in Figure 1. Each one of the spring members may be formed of a plurality of parallel leaves mounted at their upper ends in brackets 51 on the inside of the upper channels 2. Similar brackets 52 are secured to the lower ends of the spring units and to the outer faces of the side plates 25. Thus each one of the spring units A and B is floated on a plurality of leaf springs inclined somewhat from the perpendicular. In order to compensate for the weight of the screen units which tends to flex the springs into vertical position, I may provide any suitable end spring unit, as shown at the right end of Figures 1 and 3. It may include, for example, a compression member 53 shown as pivoted to the screen section B as at 54. It extends outwardly through the end of the fixed frame through an end channel 55. It has an exterior end abutment 56 and a coil spring 57 compressed between the abutment 56 and the channel 55. The compression of the spring may be adjusted as by any suitable nuts 58 on the stem 53. It will be understood that the spring compression is preferably so adjusted as to tend to keep the parts in a neutral position, such as is shown in Figure 1.

For convenience, I will indicate the upper screen cloth of section A as X and the upper screen cloth of section B as X—1. I will indicate the lower screen cloth of section A as Y and the lower screen cloth of section B as Y—1. As shown in Figure 3, the parts are so proportioned that the discharge end of X overlies the feed end of X—1, and the discharge end of Y overlies the feed end of Y—1. Thus the oversize passing over X and Y is fed directly to X—1 and Y—1 respectively.

It will be understood that the channels 28 and the rubber pads 29 of unit A extend outwardly beyond the end of the side plate 25, as shown in Figure 3. Similarly, the corresponding units 28 and 29 of section B extend outwardly beyond the feed end of the side plate 25 of that section. Also, the members 39 may be correspondingly extended and those for the section B may be cut away to prevent interference with the extending ends of section A. As shown in Figures 3 and 4, where the vibrating units which are later described are interposed, they include channeled portions 28*a* in which the pad 29 outwardly extends.

Referring to the vibrating unit, which in the form of Figure 1 is shown mounted on screen section B, its details will be shown for example in Figures 4, 5 and 6. I illustrate for example reinforcing plates 60 which may be welded or otherwise secured to the side plates 25, and which have reinforcing extensions 61. Mounted in an aperture in the reinforcing plates 60 is a bearing housing which includes a member 62 having a flange 62*a* and a generally cylindrical wall member 63 having a flange 63*a*. Bolts 63*b* and nuts 63*c* secure the flanges 62*a* and 63*a* to the side plate 25 and the reinforcing plate 60. Secured to the member 63 by means of the bolts 64*a* is an inner member 64 having a generally cylindrical flange 65 in which is mounted a cylindrical housing and strut member 66. 67 is an outer ball or roller race and 68 an inner race, 69 indicating the rollers.

Mounted for rotation with the inner race 68 is a shaft portion 70 having an inner extension 71 which is cut away as at 72 to provide a balance for the outer eccentric structure below described. 73 is an outer member rotating with the shaft and including a labyrinth connection generally indicated as 74 with the member 62, whereby the escape of oil and the entry of dust is prevented. 75 is an eccentric shaft extension from the shaft 70 to the end of which is secured any suitable pulley 76 about which passes the belt 22 whereby the eccentric structure may be rotated from the motor 19. 77 is an inner roller race mounted on the shaft 75 and surrounded by an outer race 78 with rollers 79 therebetween. Surrounding and associated with the outer race is a knuckle joint 80 of a connecting rod 81 which extends to the opposite screen. The knuckle has labyrinth connections 83 with the pulley 76, and 84 with the member 73, whereby the roller bearings are protected.

At the opposite end of the connecting rod 81 is a split hub 85 which may be compressed as by the bolt 86 and nut 87. It surrounds a connecting structure mounted on the screen unit A which includes an outer sleeve 88, an inner sleeve 89, and an interposed sleeve 90 of rubber or the like which may be vulcanized to the members 88 and 89, whereby the interior deformation of the compressible and yielding member 90 compensates for the slight oscillatory rotation of the member 85 and prevents any metal to metal bearing contact. Positioned within the inner sleeve 89 is a trunnion 91 which may be formed unitarily with a casting 92 having a positioning stud 93 extending inwardly through the side plate 25 and the reinforcing member 60. It may further be held in position as by any suitable bolts 94 and nuts 95. The same nuts and bolts may extend through the outer flange 96 of an inner plate 97, having a cylindrical flange 98 in which is positioned a tubular strut 99. The member 97 has an aperture as at 100 which also receives the inner end of the member 93. Thus a firm vibrating contact is provided for the screen unit.

The trunnion 91 has a reduced threaded end 91*a* to receive a washer 91*b* and a nut 91*c* to secure the sleeve 89 in position. In order to counter-

balance the difference in weight of the vibrating unit on screen unit B and the connecting structure on screen unit A, I may provide weights on either or both screen units, as at 110 on unit A and 111 on unit B as shown in Figure 1.

Where the tubular members or struts 66 or 99 extend across the screen sections, it will be understood that any suitable means may be employed, such as the welded plates 101 for carrying the members 34 thereacross. Since the strut unit is removable, I find it preferable to provide a removable connection between the members 34 and the plates 101, which may include the bolts 102 and nuts 103. The lever plates 39 are cut down as at 39a to pass under the members 63 and 97.

It will be realized that my description and drawings are in a broad sense illustrative and diagrammatic and that many changes in size, shape, number and disposition of parts may be made. I therefore do not wish to be limited specifically to the devices herein shown except to the extent that I may possibly limit myself in the claims. For example, I illustrate in Figure 10 a variant form of the device in which the constructive details may be the same, and will therefore not be redescribed. In the form of Figure 10, however, the screen sections A and B are mounted with the springs 50 of the two sections oppositely inclined. The motor 19, therefore, when through the belt 22 it rotates the pulley 76, imparts through the connecting rod 81 a simultaneous vibration to the sections A and B, which is in reverse direction. In the form as shown, the two screens will feed in opposition to each other, and I may therefore provide an additional feed spout 18a for the section B, and two unitary discharge chutes 120 for the upper levels of the two screens and 121 for the lower levels, to carry off the oversize which is discharged at opposite sides of the screen structure.

This type of screen lends itself to a compact installation in which there is a minimum of lateral length permitted. For instance, I may employ a single main feed spout or conveyor 122, which by branch chutes 123 and 124 may deliver material to be screened to the feed chutes or spouts 18 and 18a. A minimum of longitudinal outward extension of the screen structure is needed and all of the screen material can escape from the screen unit intermediate its length, either through the spouts 120, 121 or through the spouts 12, 13. The use and operation of my invention are as follows:

In the form of Figures 1 and following, material is fed to the top of the screen surface X, as shown in Figure 3, by means of the spout 18. The undersize will pass through X and drop on the surface Y. The fines which can pass through Y will drop through to the hopper 10 and escape along the chute or spout 12. The oversize from X will pass to X—1, the undersize of X—1 will drop on the screen surface Y—1, and the oversize from Y will also be delivered to Y—1. The undersize from Y—1 will pass downwardly through to the hopper 11 and escape through the chute or spout 13. The oversize from the surface X—1 will pass outwardly over the spout extension 130 to the feed chute 16. The oversize from the screen surface Y—1 will be fed downwardly by the chute 14, the upward extension 15 serving to prevent any unintended longitudinal escape of the particles thus fed.

In the form of Figures 1 and 3, the spring 57 serves to balance the gravital tendency of the screen sections to flex the springs 50 to vertical position. The screen, however, acts as a unit in that although relatively short individual sections are employed, the material is fed unitarily from end to end of the screen and I obtain the advantages of a long screen with great economy of construction and operation. The single vibratory unit of one screen section is perfectly adequate to vibrate both sections and the vibrating transmitting mechanism I have shown, including the connecting rod 81, efficiently applies a substantially uniform vibration to the two screen sections. There is, of course, a certain lag of vibration or a reduction in vibration resulting from the transmission, and the operator can therefore elect which section he wishes to apply his vibrating unit to. The parts are so proportioned that the operator may remove the vibrating unit from one screen section and put it on the other, thus reversing the driving connection as shown in Figure 1. The most violent vibration would be imparted to the screen upon which the vibrating unit is mounted, and the rubber padding 90, to some slight extent, cushions the vibration of the other section. Therefore, the operator puts his vibrating unit on that section where he wishes his most violent vibrating action.

The unbalanced member is enclosed and shielded by the transverse tubular strut 66. It will be observed that the center of rotation *a* of the shaft 70, 71 in relation to the screen section is eccentric in relation to the center of rotation *b* of the pulley 76. The axis *c* of the eccentric shaft extension 75 and of the connecting rod connection 80, however, is eccentric to both. In practice, the rotation of the unit thus described results in a vibration having a throw substantially twice the distance separating the center of rotation *a* of the shaft 70 in relation to the screen section, and the center of rotation *c* of the eccentric shaft extension 75.

The weights 110, 111, which are removably secured to the screen members, may be employed to change the actual or relative amplitude of vibration of the screens by changing the actual or relative weight of the two screens. Whereas I have illustrated in Figure 7 a single weight 110 secured to one of the screen units, it will be understood that I may vary the size of the weight or provide a multiplicity of weights. These weights are effective either to balance the screens to provide a uniform amplitude of vibration, or intentionally to vary the vibration in such fashion as to provide a differential between the two screens.

I claim:

1. In a vibrating screen structure a base, a plurality of screen elements and means for supporting them vibratably upon said base, said screen elements being located end to end, and means for simultaneously vibrating said screen elements including a shaft mounted on one of said elements and extending transversely thereacross in a generally horizontal plane, means for mounting said shaft rotatably upon said screen element, including bearing means eccentric to the shaft, means for rotating the shaft including a pulley mounted on the shaft, the axis of the pulley being eccentric to the shaft and to the bearing connections between the shaft and the screen element and being located substantially midway between them, and a link including an eye surrounding an outwardly extending portion of the shaft, and a connection between said link and the other screen element, said shaft and said connection between the link and other screen element being

located upon adjacent ends of the two screen elements.

2. In a vibrating screen structure a base, a plurality of screen elements and means for supporting them vibratably upon said base, said screen elements being located end to end, and means for simultaneously vibrating said screen elements including a shaft mounted on one of said elements and extending transversely thereacross in a generally horizontal plane, means for mounting said shaft rotatably upon said screen element, including bearing means eccentric to the shaft, means for rotating the shaft including a pulley mounted on the shaft, the axis of the pulley being eccentric to the shaft and to the bearing connections between the shaft and the screen element and being located substantially midway between them, and a link including an eye surrounding an outwardly extending portion of the shaft, and a connection between said link and the other screen element, said shaft and said connection between the link and other screen element being located upon adjacent ends of the two screen elements, said connection between the link and the other screen element including a stub shaft on the other screen element, an eye on the link surrounding said stub shaft and a rubber bushing interposed therebetween.

3. In a vibrating screen, a base, a plurality of generally horizontal screen elements located end to end on said base and in the same general plane, means for supporting them vibratably upon said base, and means for simultaneously vibrating said screen elements including a shaft rotatably mounted upon the end of one of said screen elements closest to the other of said screen elements, means for rotating the shaft and a connection between said shaft and the other screen element including a link having an eye surrounding an outwardly extending eccentric portion of said shaft and a connection between the other end of said link and the end of the opposite screen element adjacent the end of the screen element on which the shaft is mounted, the center of the shaft and the center of the connection between the link and the opposite screen element being located substantially midway between top and bottom of the two screen elements.

4. In a vibrating screen, a base, a plurality of generally horizontal screen elements located end to end on said base and in the same general plane, means for supporting them vibratably upon said base, and means for simultaneously vibrating said screen elements including a shaft rotatably mounted upon the end of one of said screen elements closest to the other of said screen elements, means for rotating the shaft and a connection between said shaft and the other screen element including a link having an eye surrounding an outwardly extending eccentric portion of said shaft and a connection between the other end of said link and the end of the opposite screen element adjacent the end of the screen element on which the shaft is mounted, the center of the shaft and the center of the connection between the link and the opposite screen element being located substantially midway between top and bottom of the two screen elements, one of said links being located at each side of the screen.

5. In a vibrating screen structure, a base, a pair of screen elements located end to end on said base, means for vibratably supporting them upon said base, means for vibrating them simultaneously including a shaft mounted on the end of one of said screen elements closest to the other screen element, and means for rotating it, links surrounding outwardly extending portions of the ends of said shaft and connections between the opposite ends of said links and the adjacent end of the other screen element including plates secured to the sides of said screen element, stub shafts outwardly extending from said plates, and a reinforcement extending between the sides of said other screen element, said reinforcement being generally aligned with said stub shaft.

6. In a vibrating screen structure, a base, a pair of screen elements located end to end on said base, means for vibratably supporting them upon said base, means for vibrating them simultaneously including a shaft mounted on the end of one of said screen elements closest to the other screen element, and means for rotating it, links surrounding outwardly extending portions of the ends of said shaft and connections between the opposite ends of said links and the adjacent end of the other screen element including plates secured to the sides of said screen element, stub shafts outwardly extending from said plates, and a reinforcement extending between the sides of said other screen element, said reinforcement being generally aligned with said stub shaft, said reinforcement including a structural element extending between the sides of said screen element, flanged inner plates secured to the inner sides of said screen element in alignment with said first mentioned plates, said flanged plates being socketed to receive the ends of said tubular reinforcement.

7. In a vibrating screen structure, a base, a pair of screen elements located end to end on said base, means for vibratably supporting them upon said base, means for vibrating them simultaneously including a shaft mounted on the end of one of said screen elements closest to the other screen element, and means for rotating it, links surrounding outwardly extending portions of the ends of said shaft and connections between the opposite ends of said links and the adjacent end of the other screen element including plates secured to the sides of said screen element, stub shafts outwardly extending from said plates, and a reinforcement extending between the sides of said other screen element, said reinforcement being generally aligned with said stub shaft, and positioning members extending inwardly from said plates through the sides of said other screen element.

8. In a vibrating screen structure, a base, a pair of generally horizontal screen elements located end to end on said base and in the same general plane, means for vibratably supporting them upon said base, means for vibrating them simultaneously including a shaft mounted on the end of one of said screen elements closest to the other screen element, and means for rotating it, links mounted at each side of the screen frame member, and having eyes surrounding outwardly extending eccentric portions of the ends of said shaft, and connections between the opposite ends of said links and the adjacent end of the other screen element, the centers of said shaft and of the connection between said links and the opposite screen element lying substantially midway between top and bottom of the two screen elements, and individually variable weight means mounted upon each of said screen elements intermediate top and bottom thereof.

OSCAR C. GRUENDER.