(12) UK Patent Application (19) GB (11) 2 262 513 (13) A

(43) Date of A publication 23.06.1993

(21) Application No 9226447.2

(22) Date of filing 18.12.1992

(30) Priority data
(31) 07811783 (32) 20.12.1991 (33) US

(71) Applicant
Fluoroware Inc

(Incorporated in the USA - Minnesota)

102 Jonathon Boulevard North, Chaska,
Minnesota 55318, United States of America

(72) Inventors
John Bruce Goodman
Kirk Jens Mikkelsen

(74) Agent and/or Address for Service
Abel & Imray
Northumberland House, 303-306 High Holborn,
London, WC1V 7LH, United Kingdom

(51) INT CL[5]
B65D 81/20

(52) UK CL (Edition L)
B8P PAX
U1S S2061

(56) Documents cited
WO 87/04043 A1 US 4668484 A US 4609103 A
US 4135625 A US 3850296 A US 3620409 A

(58) Field of search
UK CL (Edition K) B8C CWP3, B8P PAX PE2B
PE2C PV
INT CL[5] B65D 81/18 81/20

# (54) Wafer container

(57) A container for semiconductor wafers W comprises portions 58, 59 which seal together and a gas connecting stem 64 for controlling the atmosphere within the container, e.g. by partial excavation or supply of an inert gas.

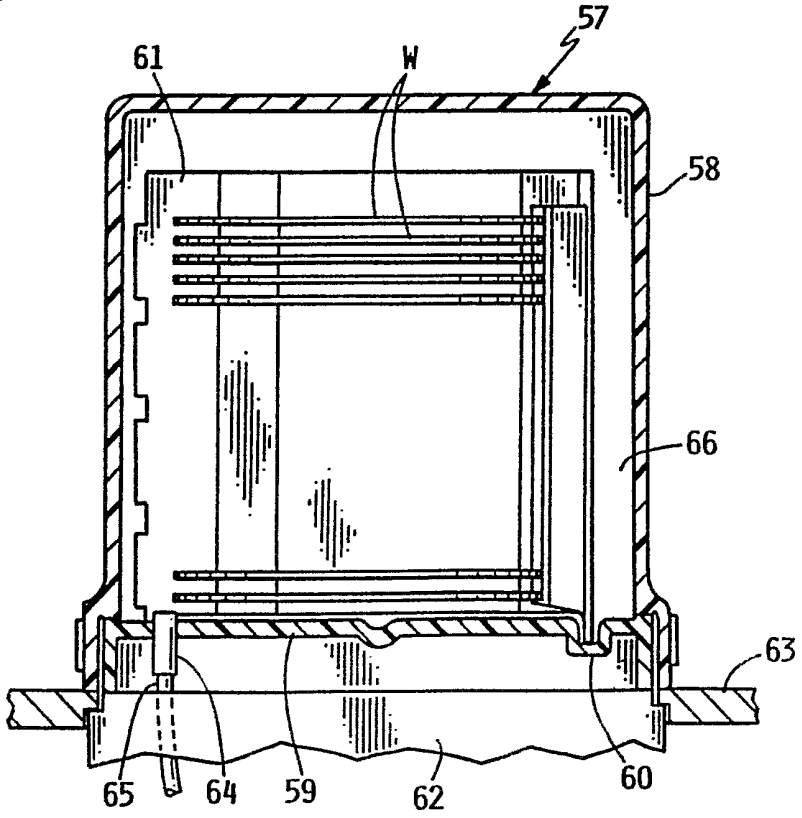


FIG. 13

GB 2 262 513 A

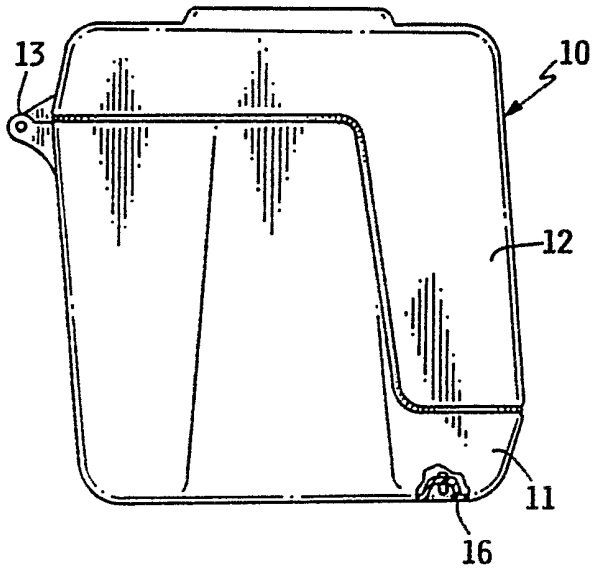


FIG. 1

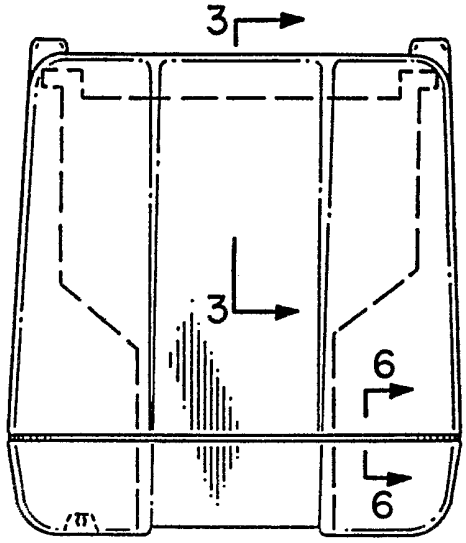


FIG. 2

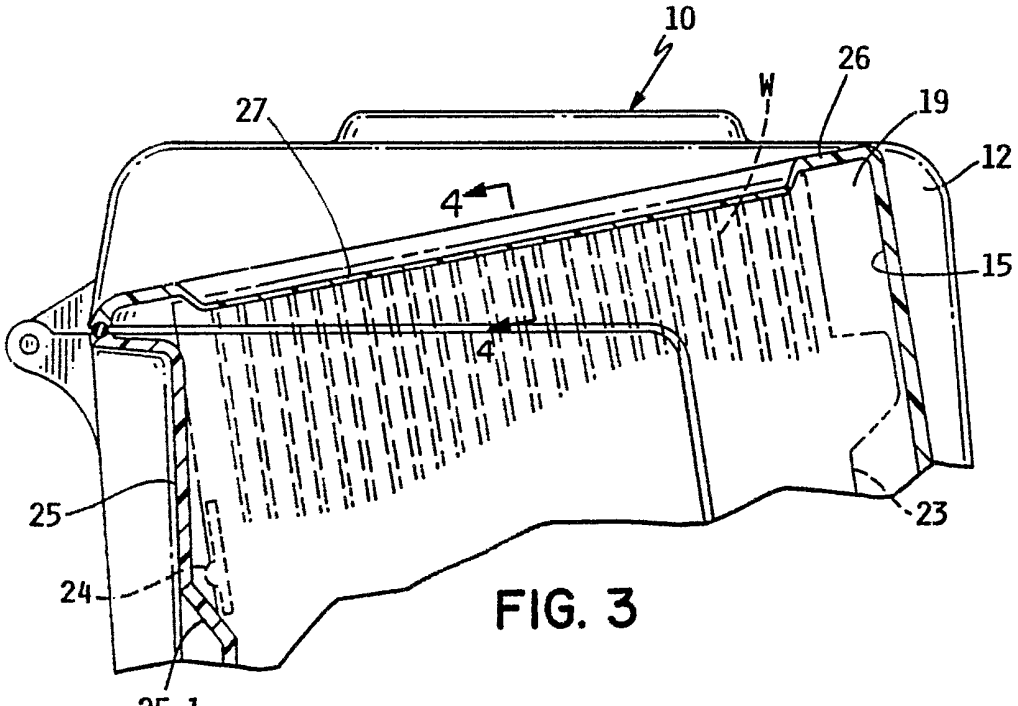


FIG. 3

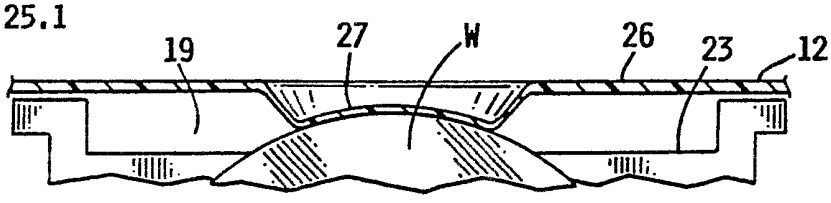


FIG. 4

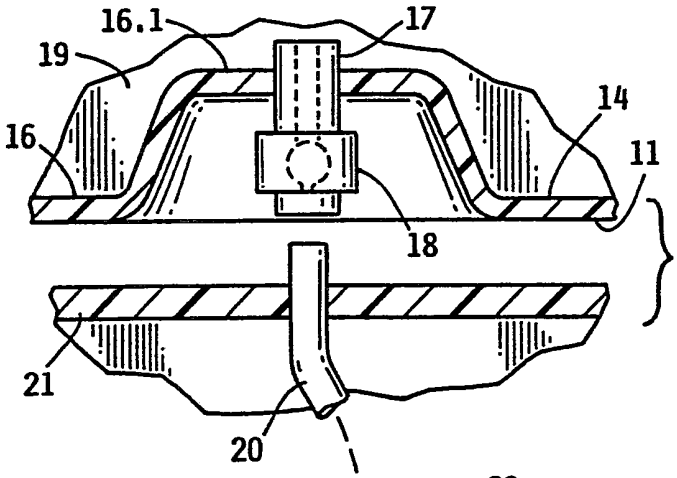


FIG. 5

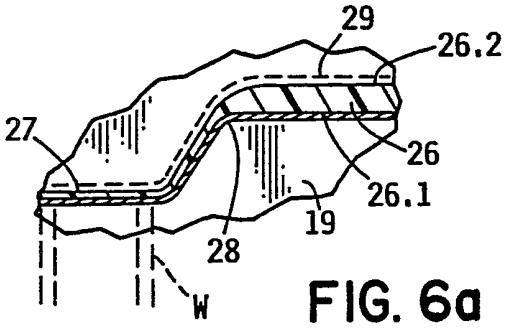


FIG. 6a

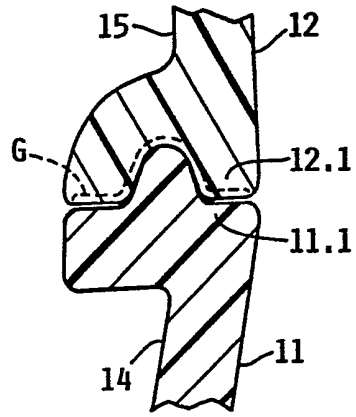


FIG. 6

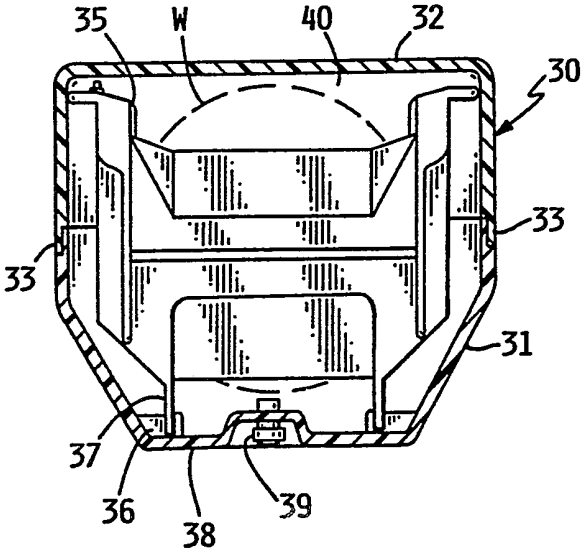


FIG. 7

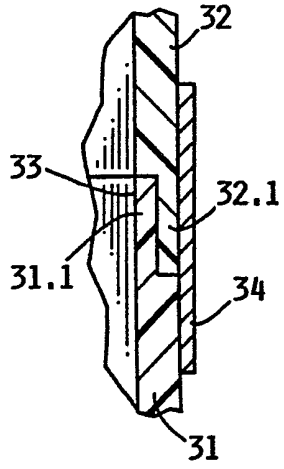


FIG. 8

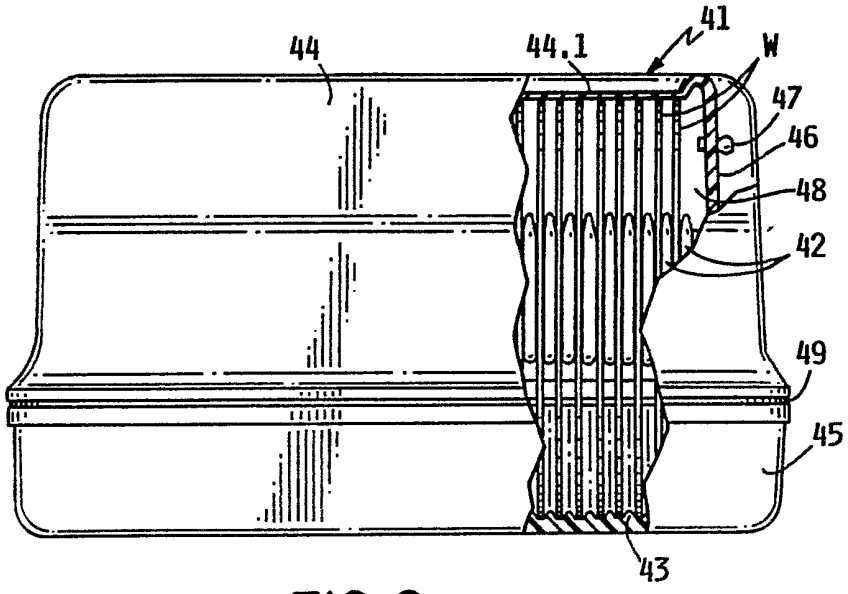


FIG. 9

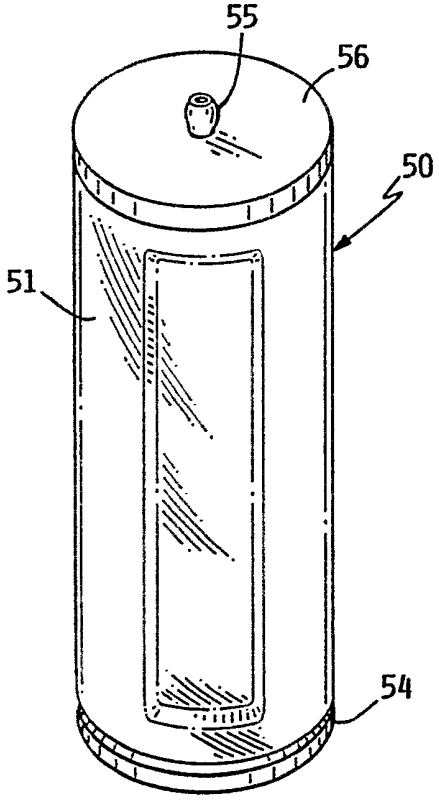


FIG. 10

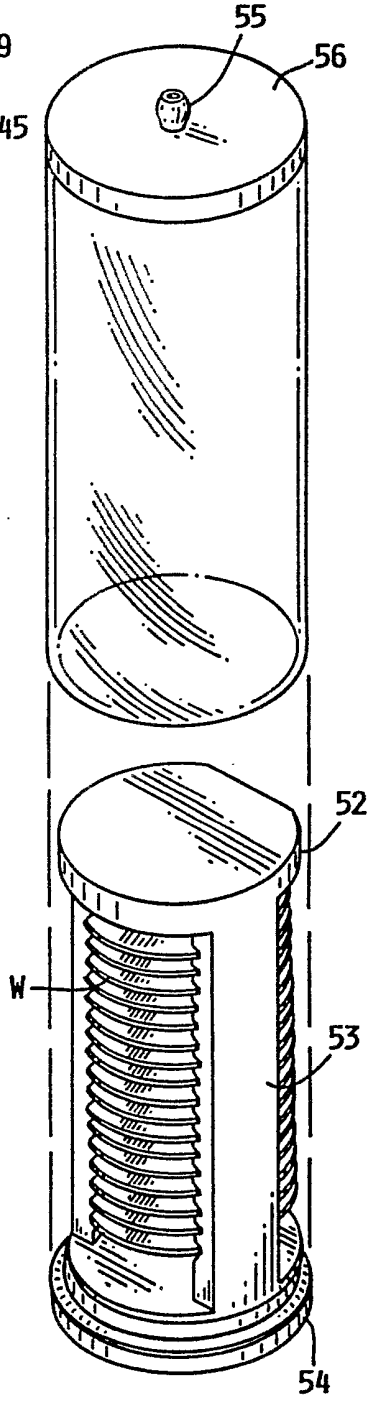


FIG. 11

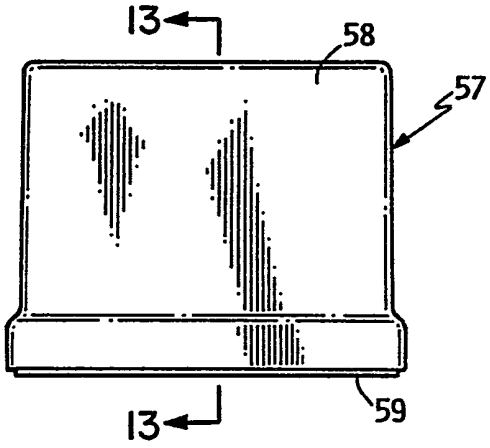


FIG. 12

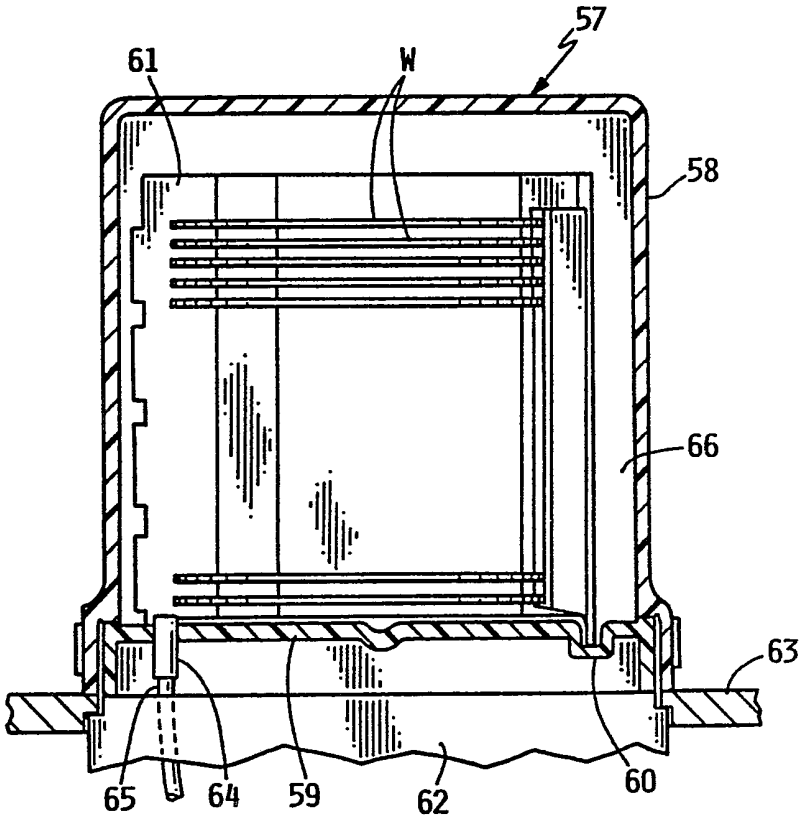


FIG. 13

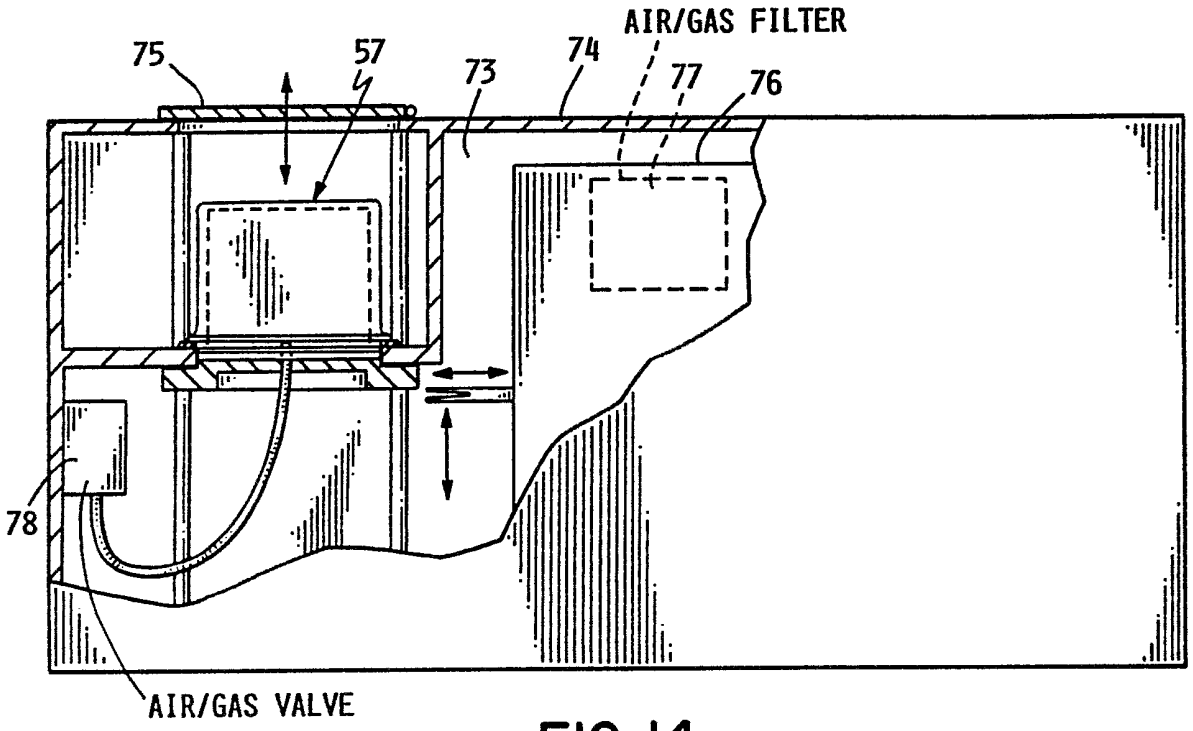
AIR/GAS FILTER
75
57
73
74
77
76
78
AIR/GAS VALVE

FIG. 14

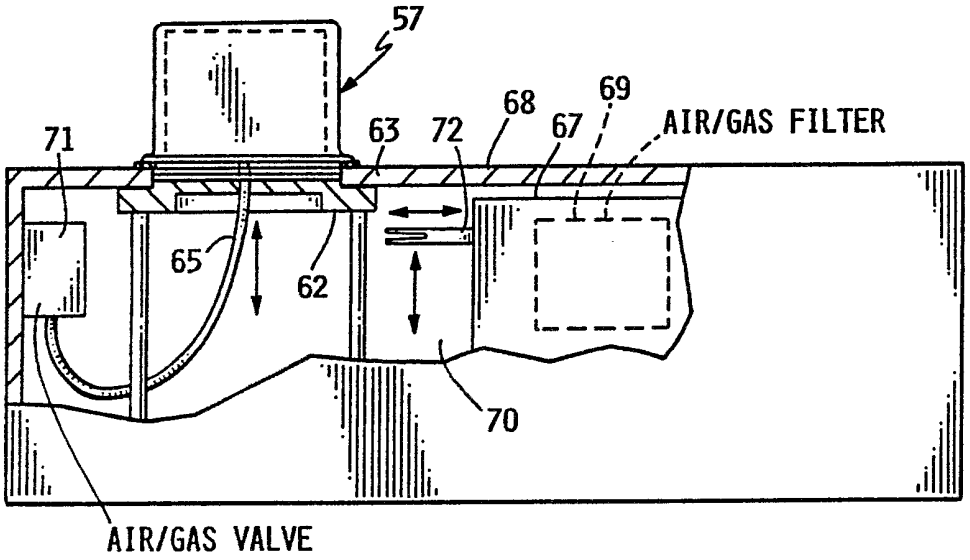
57
68
69
71
63
72
67
AIR/GAS FILTER
65
62
70
AIR/GAS VALVE

FIG. 15

# WAFER CONTAINER

This invention relates to devices and methods of storing silicon wafers for handling and shipping semiconductor wafers as they are being processed into circuit chips.

As more and more circuits are being applied into smaller and smaller spaces on circuit chips, the need for cleanliness and the minimizing of likelihood of collecting particles becomes more and more important. Previously, containers have been used for enclosing semiconductor wafers for shipping and storage. Processing of semiconductors wafers usually requires the use of a wafer carrier; and containers have been used for confining a wafer carrier full of semiconductor wafers so that when storage has been completed, the wafers can be removed from the container by simply lifting the wafer carrier out of the container, whereupon the carrier and wafers are ready for immediate processing.

However, in the past, it has been commonly necessary to again clean the wafers as a first step of further processing, in order to remove particles and organic materials that may have been accumulated during storage.

An object of the invention is to provide an improved container and method for shipping and storing semiconductor wafers and substrates used in production of circuit chips.

According to the invention there is provided a wafer storing and shipping container comprising a container of stiff material and comprising interior portions with spacer means supporting individual wafers in spaced and confronting relation to each other, the container comprising discrete portions separable from each other for obtaining access to said interior portions, said discrete portions being releasably and hermetically sealed together, and one of said discrete portions comprising a valved gas port facilitating withdrawing and adding portions of the gas atmosphere within said interior portions.

A preferred feature of the invention is a closed container having separable portions for loading wafers into and obtaining access to wafers in the container, and wherein the separable portions are releasably sealed to each other, and a gas port and valve on the container to allow gas pressure to be reduced in the container for causing the container to remain closed and to allow the atmosphere in the container to the controlled. In most cases, the partial vacuum is the only means by which the container is maintained in closed condition. The separable portions may be a box bottom and box top, a hinged or detachable lid, a hinged or detachable door, or other arrangements. Additionally, the surfaces of the container may be diamond coated to render the container chemically inert and to add lubricity and prevent sloughing particles into the wafers being carried.

Another preferred feature of the invention is a container for storing and shipping semiconductor wafers under subatmospheric pressure and wherein the container is of generally stiff or rigid construction to protect the wafers and incorporates a flexible membrane or bladder portion located adjacent the edges of a number of wafers within the container as to be drawn by flexing inwardly under influence of the subatmospheric pressure and

against the wafers for holding and retaining the wafers against movement within the container.

Still another preferred feature of the invention is a method of confining semiconductor wafers for storage and shipping, wherein the wafers are placed in a multi-part container which is particularly adapted to hold such wafers. The container is closed and sealed, and then at least partially evacuated of air, as to draw the parts of the container into sealed relation, thereby preventing any significant access by particles to the stored wafers. The interior atmosphere within the container may be changed from air to partly inert gas which may also be at reduced pressure relative to ambient pressure.

Another preferred feature is the method of providing a flexible membrane portion in the container wall adjoining the edges of the wafers and then drawing a partial vacuum in the container to cause the membrane to flex and be drawn inwardly against the edges of the wafers to minimize any likelihood of the wafers moving around within the container.

Where herein reference is made to wafers, the word is meant to refer to semiconductor wafers of silicon, galium arsenide, and other semiconductor materials, photo masks and other substrates used in the manufacture of circuit chips.

By way of example, embodiments of the invention will now be described with reference to the accompanying drawings, of which:

Figure 1 is a side elevation view of a shipping container for containing a wafer carrier full of semiconductor wafers for storage or shipment;

Figure 2 is an end elevation view of the container in Figure 1;

Figure 3 is a detail section view taken approximately at 3-3 of Figure 2;

Figure 4 is a detail section view taken approximately at 4-4 of Figure 3;

Figure 5 is an enlarged detail section view illustrating the gas conveying stem and valve and an adaptor on a tabletop or piece of equipment for alternately drawing a vacuum or relieving the vacuum in the container;

Figure 6 is an enlarged detail section view taken approximately at 6-6 of Figure 2 and illustrating the sealed relation between the cover and bottom parts of the container;

Figure 6a is an enlarged detail section view of a portion of the container illustrated in Figures 1-6;

Figure 7 is a detail section view of an alternative form of container to confine a wafer carrier and semiconductor wafers therein;

Figure 8 is an enlarged detailed section view showing the sealed joint between the cover and bottom of the container;

Figure 9 illustrates another form of shipping container for storing semiconductor wafers;

Figure 10 is a perspective view of still another form of container for storing semiconductor wafers;

Figure 11 is an exploded perspective view of the container illustrated in Figure 10 and illustrating the cover removed from the base portion of the container;

Figure 12 is an elevation view of an automation compatible box in which a wafer carrier may be stored;

Figure 13 is an enlarged detail section view taken at approximately 13-13 of Figure 12;

Figure 14 is a diagrammatic illustration of a wafer processing apparatus and environment controlling enclosure receiving the automation compatible box therein for feeding the wafers into the processing equipment, and

Figure 15 is an alternative form of processing equipment with environment controlling enclosure for use with such an automation compatible box.

Figure 1 illustrates a container, indicated in general by numeral 10, which is uniquely adapted for storing silicon wafers in a wafer carrier, and it will be noted that the container 10 is a multi-part container with a box bottom 11 and a box top or cover 12 connected together by a hinging structure 13. The cover 12 and box bottom 11 seal together at the joining edge portions 12.1, 11.1, substantially as illustrated in Figure 6 so that the interior of the box is entirely sealed from ambient conditions at the exterior of the container.

It may be necessary, in some conditions, to utilize a gasket "G" illustrated in dotted lines in Figure 6 in the joint between the box bottom and the cover so as to obtain a hermetic seal between the two parts of the box. Such a gasket will be formed of a compressively yieldable material and be replaceable for repeated uses of the container 10.

The principal portions of the container 10, i.e. the box bottom and the cover 12, are preferably formed of moldable plastics, such as high density polyethylene or polypropylene or of similar plastic material which is resistive to damage due to breakage and resistive to abrasion. The interior surfaces 14, 15 of the box bottom and cover may be coated with metal or may be diamond coated to prevent any passage of gases through the walls of the box bottom or cover. Accordingly, the box or the container 10, when closed, will be substantially hermetically sealed in its entirety.

The container 10 in one of its walls, such as the bottom wall 16 of the box bottom 11, has a quick connect stem 20 sealingly inserted and carried therein and incorporating a valve 18, for controlling the atmosphere in the interior 19 of the container. Preferably, the portion 16.1 of the wall in which the stem is mounted will be offset so as to shield the stem 20 and valve 18 from any possible physical damage. The quick connect stem 20 and valve 18 is adapted to telescopically receive the nipple end of a gas supply line or vacuum line 19, which may be carried in a tabletop or platform portion 21 of a piece of equipment upon which the container 10 may be placed so that a vacuum and gas source and valve 22 may be connected to the stem 20 and valve 18 as to change the atmosphere within the

container 10. The vacuum/gas source 22 will draw a vacuum or reduce the gas pressure within the interior 19 of the container. Alternately, a portion of the gas within the interior 19 of the container may be removed and then subsequently replaced with an inert gas, such as nitrogen, or replaced by filtered air from which air-born particles have been removed.

Figure 3 illustrates that the container 10 is uniquely adapted to contain and store semiconductor wafers which are shown in dotted lines and indicated by the numeral W in Figure 3.

The wafers W are carried, within the container 10, in a wafer carrier which is indicated in general by numeral 23. Such a wafer carrier is commonly known to persons of skill in the art and is of the general type illustrated in U.S. Patent 4,817,795, and in numerous other patents. Such a wafer carrier 23 has numerous ribs and spaces between the ribs in the sidewalls of the carrier for maintaining the wafers W in spaced and confronting relation with each other; and such a wafer carrier 23 also has an H-bar end 24, which is particularly accommodated by the rear wall 25 of the cover 12 by the offset 25.1. The wafer carrier 23 may be carried, within the container 10, in inclined position so that all of the wafers are inclined to rest against the supporting ribs within the wafer carrier 23.

The top wall 26 of the cover 12 may include a panel portion 27 which is reduced in thickness as compared to the main portion of the top wall 26 of cover. The thinness of the panel 27 causes the panel to act like a flexible membrane so as to flex under conditions of vacuum pressure within the interior 19 of the container

so that the flexible panel or membrane 27 is drawn into engagement with the adjacent edges of the wafers W, and thereby hold the wafers against movement in the wafer carrier 23 and thereby minimize the possibility of breakage of the wafers and minimize the generation of particles which might otherwise occur if the wafers are allowed to move freely in the wafer carrier. Whereas portions of the walls of the cover 12 may have thicknesses in the range of 0.050" to 0.075" (0.13 to 0.19cm), and other thicknesses to accommodate edges, hinges and reinforcing locations, the panel 27 will have a thickness, considerably less than the thickness of the top wall, and may have a thickness in the range of 0.010" to 0.040" (0.025 to 0.10cm).

depending upon the material being used. Of course, other thicknesses may be used in the panel or membrane 27, so long as the panel is flexible under influence of the differential atmospheric pressure within the container as compared to the atmospheric conditions at the exterior.

Figure 6a illustrates an important detail of the container 10 which has at least the inner surfaces of the walls diamond coated. Figure 6a illustrates the top wall 26 having its inner surface 26.1 covered by a coating or sheath 28 of diamond-like material, and it will be understood that all of the inner surfaces of all of the walls of the container will be diamond coated. Although the diamond coating 28 is only illustrated on the container 10 of Figures 1-6, 6a, the surfaces of all of the forms of container illustrated in this disclosure may be diamond coated. As illustrated, the diamond coating 28 covers the flexible panel 27 as well as the top wall 26 and the other wall portions of the container.

Similarly, the outer surface 26.2 of the top wall may also be optionally covered with a diamond coating or sheath 29, which is shown in dashed lines to suggest the more optional nature of the diamond coating 29.

The material in the diamond-like coating 28 may be otherwise described as diamond, polycrystalline diamond, diamond-like carbon, amorphous diamond, hydrogenated diamond-like carbon, single-crystal heteroepitaxial diamond. In this diamond-like coating, the majority of the carbon atoms are diamond bonded, resulting in a hard, nearly perfect chemically resistant coating which has a low coefficient of friction and is nearly

impermeable to liquid and gaseous reagents and other gaseous product, including air. The coating 28 is applied by a chemical vapor deposition (CVD), although the methods of applications of the coating may vary slightly. One technique for depositing the diamond coating uses an ion beam technique. The ion source, preferably about 30 cm in diameter with its extraction grids masked to 10 cm in diameter, is used to directly deposit the diamond-like carbon film. The ion source uses argon gas in the hollow cathode located in the main discharge chamber, as well as in the neutralizer. After a discharge is established between the cathode and anode, methane ($CH_4$) is introduced through a manifold into the discharge chamber. For this deposition, the molar ratio methane to argon was 0.28. The ratio was found to be ideal for generating films under one set of conditions. In these procedures, the total ion beam energy is the sum of the discharge voltage and the screen voltage, and is around 100 eV. Typical current densities at these conditions are 1 $ma/cm^2$ at a distance of 2.5 cm axially downstream of the grids. Films are deposited at these conditions and accumulated as needed.

Other methods of deposition may be used and available and certain of them are described in more detail in copending application SN 734,794 filed 7/23/91 by the same inventors and under common ownership with the present application, the disclosure from which is incorporated herein by reference.

Another form of container is illustrated in Figures 7 and 8, and the container is indicated in general by numeral 30 and has a box bottom portion 31 and a cover

or top portion 32, which are joined together at a joint 33. The joint 33 extends around the entire periphery of the box and has a lip portion 31.1 of the box bottom in overlapping and telescoping relation with respect to a lip portion 32.1 of the top portion or cover 32. A length of sealing tape 34 will overlie the joint 33 and will extend around the entire periphery of the container 30 to securely hermetically seal the top or cover 32 to the box bottom 31. As indicated previously, the container 30 will confine a wafer carrier 35 filled with semiconductor wafers W and because of the shape of the box and the placement tabs 36 in the box bottom which engage the feet portions 37 of the wafer carrier for properly positioning the wafer carrier in the container. The bottom wall 38 of the box bottom 31 has a stem and valve 39 mounted therein which is identical to the stem and valve 17, 18 as illustrated in Figure 5 so that the atmosphere in the interior 40 of the container 30 may be changed by reducing the gas pressure therein or by changing the gas from air to an inert gas, such as nitrogen, and possibly supplying filtered air into the container when the container is to be reopened after being sealed closed.

Another form of container is illustrated in Figure 9 and is indicated in general by the numeral 41. In this case, the container is uniquely adapted for containing semiconductor wafers W by spacing ribs 42, 43 which are formed directly in the cover portion 44 and in the box bottom 45. In this particular instance, the container 41 stores the semiconductor wafers without the use of a wafer carrier. The end wall 46 of the cover or top portion 44 has a gas supplying connect stem and valve 47, like the stem and valve 18 of Figure 5, for supplying gas into and removing gas from the interior

chamber 48 of the container. Again, the joint 49 between the cover 44 and box bottom 45 provides a sealed connection to be drawn tightly into sealed connection when reduced gas pressure exists in the interior 48 of the container.

In Figure 9, the top cover 44 of the container also has a thin wall section 44.1 defining a flexible membrane adjacent the edges of the semiconductor wafers for engaging the edges of the wafers when reduced gas pressure within the interior of the container causes the flexible membrane to be drawn inwardly against the wafers for holding the wafers in stationary condition within the container.

In the form illustrated in Figure 10, another container, indicated in general by numeral 50, facilitates carrying a number of semiconductor wafers W in its interior. The container 50 has a top cover 51 and a box bottom 52 which inserts into the cover 51. The box bottom 52 has upstanding pillar portions 53 which are grooved to define ribs and grooves in which the semiconductor wafers are placed and maintained in spaced and confronting relation to each other. The lower edge portion of the cover 51 and the base portion 54 of the box bottom engage each other in a sealing relationship and may use a gasket if needed so as to hermetically seal the interior of the container from the conditions at the exterior thereof. A gas supplying and withdrawing stem 55 is provided in the top wall 56 of the cover for connection to a source of vacuum pressure or other gas material so as to reduce the gas pressure within the container or supply substitute gas material, such as inert gas like nitrogen, into the interior.

Figures 12-15 illustrate an automation compatible box useful with processing equipment in carrying semiconductor wafers into the processing equipment. The automation compatible box is indicated in general by numeral 57 and has a cover or top portion 58 and a base or bottom portion 59 which fit together and seal to each other. The base 59 is configured as at 60 to position a wafer carrier 61 on the base portion so that when the base portion is carried on an elevator 62 of processing equipment, the base portion will be separated from the cover 58 and carry the wafer carrier 61 downwardly, while the cover 58 remains supported on a table or shelf 63 while the base and wafer carrier are lowered into processing equipment. The semiconductor wafers W in the wafer carrier 61 are lowered along with the base and wafer carrier for processing.

A gas supply quick connect stem 64 is mounted in the wall of the base 59 and is adapted to be fitting to a supply tube 65 mounted on the elevator base 62 for connection to a suitable source of air or inert gas which may be filtered and substantially free of particles for relieving the reduced gas pressure within the chamber 66 of the container 57.

Figure 15 illustrates, diagrammatically, the equipment with which the automation compatible box 57 may be used. The processing equipment 67 is confined within an enclosure 68, of which the supporting shelf or table 63 is a part. The processing equipment may incorporate an air/gas filter 69 so as to reduce the number of particles in the atmosphere within the interior chambers 70 of the enclosures 68. The tube 65 is connected to an air/gas valve mechanism 71, which regulates the flow of gas in the stem 64 and in the

interior chamber 66 of the automation compatible box 57. The elevator base 62 may be lowered after the negative pressure in the interior of the automation compatible box is relieved so that the wafers W in the wafer carrier 61 may be lowered so as to be manipulated by a robot fork 72 and moved into the processing equipment 67 for further processing.

In the form illustrated in Figure 14, the entire automation compatible box 57 moves into the interior 73 of the enclosure 74; and an access port is closed by a cover 75 after the automation compatible box is received into the enclosure. Again, the processing equipment 76 may incorporate an air/gas filter 77, and in this arrangement, the entire automation compatible box is subjected to the controlled atmosphere in the interior 73 of the enclosure. Again, an air/gas valve and source 78 is connected to the stem 64 of the automation compatible box for relieving the negative pressure therein or supplying the atmosphere in the automation compatible box as is desired.

It will be seen that the present invention provides a container with discreet portions separable for inserting and removing semiconductor wafers, and a valve to gas port in one of the portions of the container for facilitating withdrawing and adding portions of gas atmosphere within the interior portions of the container.

The invention also comprises a method of storing semiconductor wafers by confining the wafers in enclosed multi-part container and retaining the wafers in spaced and confronting relation to each other, sealing the

container to isolate the atmosphere in the container from ambient conditions at the exterior of the container, and then modifying the atmosphere within the container away from such ambient conditions at the exterior of the container. Preferably the atmosphere within the container is reduced in pressure so that the multi-parts of the container are drawn tightly together to hold the semiconductor wafers in isolation from ambient conditions at the exterior of the container. The method also includes providing of a flexible membrane in one of the walls of the container so that when a subatmospheric pressure is established within the container, the flexible membrane is drawn inwardly and against the adjacent semiconductor wafers as to hold the wafers stationary within the container and within the wafer carrier within the container.

The present invention may be embodied in other specific forms without departing from the spirit or essential attributes thereof, and it is therefore desired that the present embodiment be considered in all respects as illustrative and not restrictive, reference being made to the appended claims rather than to the foregoing description to indicate the scope of the invention.

CLAIMS:

1. A wafer storing and shipping container comprising

a container of stiff material and comprising interior portions with spacer means supporting individual wafers in spaced and confronting relation to each other, the container comprising discrete portions separable from each other for obtaining access to said interior portions, said discrete portions being releasably and hermetically sealed together, and one of said discrete portions comprising a valved gas port facilitating withdrawing and adding portions of the gas atmosphere within said interior portions.

2. A container according to claim 1 wherein the container confines a gas comprising subatmospheric pressure holding the container in closed condition.

3. A container according to claim 1 or claim 2 wherein the container confines a gas substantially free of gas-born particles and organic materials.

4. A container according to any preceding claim wherein the container confines a substantially inert gas.

5. A container according to claim 4 wherein the inert gas comprises a subatmospheric pressure.

6. A container according to claim 4 or claim 5 wherein the gas comprises a portion selected from a class of gases comprising atmospheric air, nitrogen and argon.

7. A container according to any preceding claim wherein one of said discrete portions comprises a flexible membrane adjoining said interior portions for releasably engaging wafers confined therein.

8. A container according to claim 7 wherein said interior portions comprise an elongate row of slots and ribs for maintaining a multiplicity of such wafers in spaced and confronting relation with each other and said membrane extending along the elongate row of slats and ribs.

9. A container according to claim 7 or claim 8 wherein the flexible membrane is formed integrally of and in one piece with said one discrete portion.

10. A method of storing semiconductor wafers, comprising

confining the wafers within a closed multi-part container and retaining the wafers in spaced and confronting relation to each other,

sealing the container to isolate the gaseous atmosphere in the container from ambient conditions exterior of the container,

and then modifying the atmosphere within the container away from such ambient conditions at the exterior of the container.

11. A method of storing semiconductor wafers according to claim 10 wherein the modifying is obtained by reducing the gas pressure within the container to below ambient conditions to draw the parts of the container tightly against each other.

12. A method of storing semiconductor wafers according to claim 10 or claim 11 wherein the modifying is obtained by replacing at least a portion of the gaseous atmosphere with a different gas.

13. A method of storing semiconductor wafers according to claim 12 wherein the modifying is obtained by replacing at least a portion of the gaseous atmosphere with inert gas.

14. A method of storing semiconductor wafers according to claim 13 wherein the atmosphere with a portion of inert gas is established at a gas pressure which is less than ambient atmospheric pressure.

15. A method of storing semiconductor wafers according to claim 11 or any one of claims 12 to 14 when dependent on claim 11 wherein a thin flexible membrane portion of the container wall is arranged adjacent edges of at least a portion of the wafers in the container, to be drawn inwardly against the wafers when the gas pressure is reduced in the container.

16. A method of storing semiconductor wafers according to claim 11 or any one of claims 12 to 15 when dependent on claim 11 wherein after storing of the wafers is nearly completed the gas pressure within the container is increased to ambient conditions.

17. A method of storing semiconductor wafers according to claim 16 wherein said increasing the gas pressure is obtained by supplying new gas from which at least a portion of air-born particles have been removed.

18. A method of storing semiconductor wafers according to claim 16 or claim 17 wherein after storing of the wafers is nearly completed, and before said increasing the gas pressure, the entire container is confined in an atmosphere of gas from which a portion of air-born particles have been removed.

19. A method of storing semiconductor wafers according to claim 18 wherein said increasing the gas pressure is obtained by supplying into the container a quantity of gas from which particles have been removed.

20. A container according to any of claims 1 to claim 9 wherein the container comprises wall portions coated with a diamond-like sheath.

21. A container substantially as herein described with reference to and as illustrated by Figs. 1 to 6 and 6a, 7 and 8, 9, 10 and 11 or 12 and 13 of the accompanying drawings.

22. A method of storing semiconductor wafers, the method being substantially as herein described with reference to and as illustrated by Figs. 1 to 6 and 6a, 7 and 8, 9, 10 and 11 or 12 to 15 of the accompanying drawings.

Patents Act 1977
Examiner's report to the Comptroller under Section 17 (The Search Report)

Application number
GB 9226447.2

**Relevant Technical fields**

(i) UK Cl (Edition K ) B8P (PAX, PV, PEZB, PE2C)
B8C (CWP3)

(ii) Int Cl (Edition 5 ) B65D 81/18, 81/20

Search Examiner
MIKE HENDERSON

**Databases** (see over)
(i) UK Patent Office

(ii)

Date of Search
9 FEBRUARY 1993

Documents considered relevant following a search in respect of claims 1 TO 22

| Category (see over) | Identity of document and relevant passages | Relevant to claim(s) |
|---|---|---|
| Y | WO 87/04043 A1 (ASYST TECHNOLOGIES) | 1-6,10,11 |
| X | US 4668484 (ELLIOTT) | 1,3,4,6 10,12,13 |
| Y | US 4609103 (BIMER et al) | 1-6,10,11 |
| Y | US 4135625 (MERRILL) | 1-6,10,11 |
| Y | US 3850296 (HIRATA et al) | 1-6,10,11 |
| Y | US 3620409 (ROSENBAUM) | 1-6,10,11 |

| Category | Identity of document and relevant passages | Relevant to claim(s) |
|---|---|---|
| | | |

**Categories of documents**

X: Document indicating lack of novelty or of inventive step.

Y: Document indicating lack of inventive step if combined with one or more other documents of the same category.

A: Document indicating technological background and/or state of the art.

P: Document published on or after the declared priority date but before the filing date of the present application.

E: Patent document published on or after, but with priority date earlier than, the filing date of the present application.

&: Member of the same patent family, corresponding document.

**Databases:** The UK Patent Office database comprises classified collections of GB, EP, WO and US patent specifications as outlined periodically in the Official Journal (Patents). The on-line databases considered for search are also listed periodically in the Official Journal (Patents).

Published 1993 at The Patent Office, Concept House, Cardiff Road, Newport, Gwent NP9 1RH. Further copies may be obtained from Sales Branch, Unit 6, Nine Mile Point, Cwmfelinfach, Cross Keys, Newport, NP1 7HZ. Printed by Multiplex techniques ltd, St Mary Cray, Kent.