March 19, 1929. G. SPIESS 1,705,506

SHEET LIFTING DEVICE WORKING WITH SUCKERS

Filed Sept. 22, 1927 2 Sheets-Sheet 1

Fig. 1.

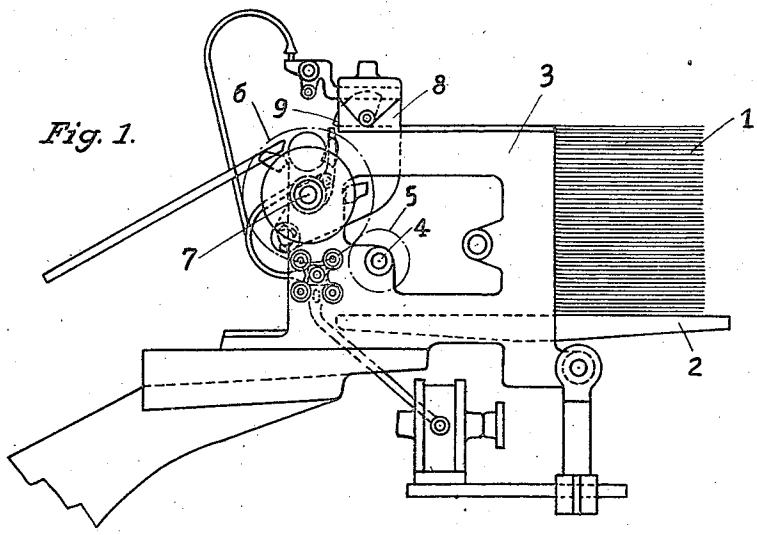

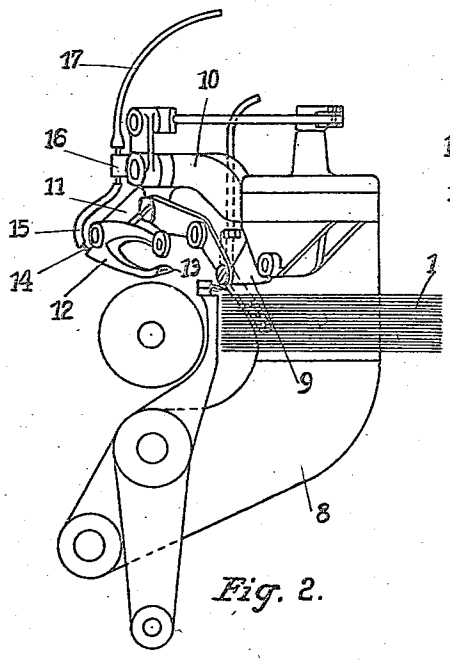

Fig. 2.

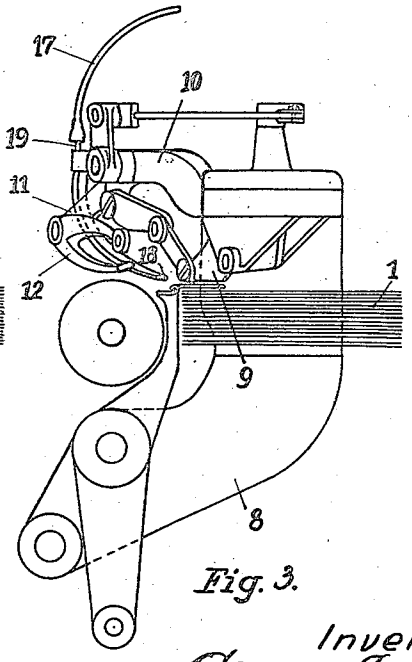

Fig. 3.

Inventor:
Georg Spiess
by Paul Schilling
Attorney

March 19, 1929. G. SPIESS 1,705,506

SHEET LIFTING DEVICE WORKING WITH SUCKERS

Filed Sept. 22, 1927 2 Sheets-Sheet 2

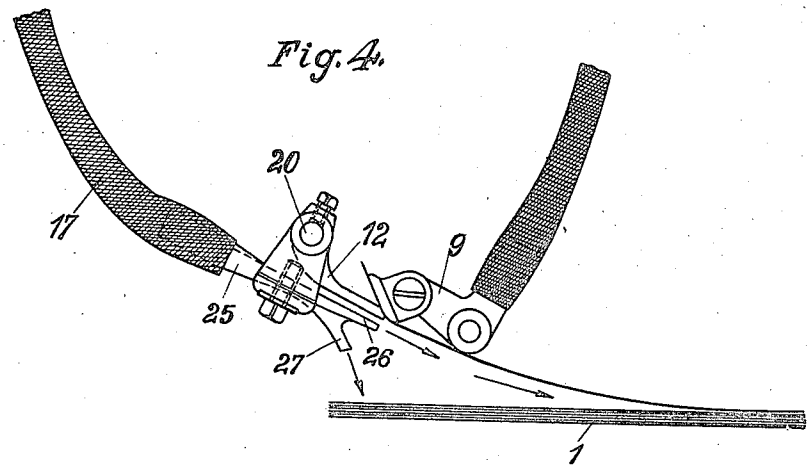

Fig. 4.

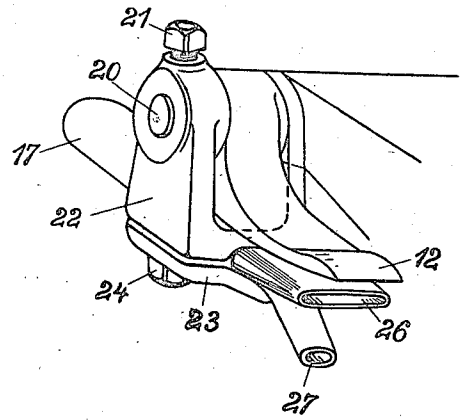

Fig. 5

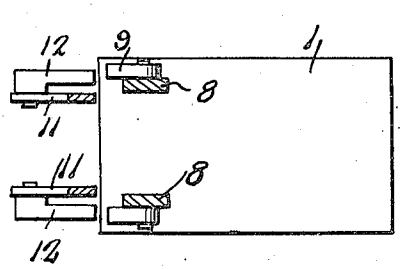

Fig. 1a.

Inventor:
Georg Spiess
by [signature]
Attorney

Patented Mar. 19, 1929. 1,705,506

UNITED STATES PATENT OFFICE.

GEORG SPIESS, OF LEIPZIG-PLAGWITZ, GERMANY.

SHEET-LIFTING DEVICE WORKING WITH SUCKERS.

Application filed September 22, 1927, Serial No. 221,378, and in Germany September 25, 1926.

It has become known to blow, in sheet lifting devices which work with suckers, air between the sucked-on portion of the top-sheet and the pile of sheets in order to facilitate the separation of the uppermost sheet which has been sucked on at one edge and lifted from the pile. When the sheet is lifted by the suckers on the front-edge and pulled off, the blowing air acts in a direction opposite to that in which the sheet is being pulled off and the suckers must, as they have to overcome the total resistance of the sheet, possess a strong sucking effect, wherefrom results the danger that several sheets may be sucked on.

According to the invention the front edge or the front-corners of the sheet bent off by the suckers is or are gripped by gripper jaws which then pull the sheet forward, air being blown at the same time, from blowers connected with the gripper jaws, under the bent portion of the top-sheet between this sheet and the pile. Only a very feeble sucking effect is consequently required as the same is necessary only for bending a very small portion of the top-sheet so that a reliable pulling off of the sheet from the pile is ensured as the sheet is securely gripped by the mechanical gripper jaws. The blowing nozzles co-operating with the gripper jaws are, according to the invention, either directly fixed to the movable gripper jaw which grips the top-sheet from below, so that they participate in the movement of the same, or stationarily mounted preferably on the support of the gripper-jaw.

It is advisable to direct two different blowing air-jets between the portion of sheet lifted by the suckers and the pile, the one along the lower surface of the lifted sheet-portion to facilitate pulling off of the top-sheet from the pile, and the other directly against the upper-surface of the pile for holding down the next following sheets. The blowing nozzles are preferably adjustably arranged under the movable gripper jaw, either stationarily or movable with the gripper jaw, or the one nozzle stationary and the other movable. The blowing nozzles may have a common supply-pipe and a common regulation or they may have each its own supply-pipe. The strength of each blowing air-jet may be regulated individually.

Several embodiments of the invention are illustrated, by way of example, in the accompanying drawings, in which:

Fig. 1 shows in elevation the total arrangement of the device.

Fig. 1[a] is a plan view showing the arrangement of the separators relative to the sheet pile.

Fig. 2 shows on larger scale the carrier for the sheet-lifting device, the blowers being mounted on the movable gripper jaw.

Fig. 3 is a vew similar to Fig. 2, the blowers being mounted on the carrier of the gripper jaw.

Fig. 4 illustrates a form of construction of a gripper jaw with two blowing nozzles connected with the same.

Fig. 5 shows on larger scale and in perspective view the connection of the gripper jaw with the blowers.

Referring to Fig. 1, the sheet-pile is designed by 1; 2 is a pile-plate, 3 the machine-frame, 4 the driving shaft from which, by spur-wheels 5 and 6, a shaft 7 is rotated on which, at either side of the pile 1, arms 8 are mounted so that they can be adjusted in transverse direction. These arms 8 carry the sheet lifting device and pull the sheet off the pile by an oscillating movement. To the arms 8 suction nozzles 9 are hingedly connected, designed to suck on and lift the front-corners of the top-sheet. On an extension 10 of each arm 8 gripper jaws 12 are hingedly mounted by means of a lever 11, said grippers being controlled by a system of levers and control-cams so that, after the sheet-corners have been lifted by the suckers 9, they grip under the lifted sheet-corners and clamp the same in co-operation with the suction-nozzles so that no further sucking-work is required. It is not necessary to specially describe in which manner the suckers and gripper jaws are operated as they do not form part of the invention.

The grippers 12, which clamp the lifted sheet-corners against the suction-nozzles 9, have blowing-nozzles 13 from which a channel leads to a tubular-connection 14 on which a hose 15 is fixed. The other end of hose 15 is attached to a tubular socket of an air-channel provided in the carrier 15 of the operating levers for the gripper jaws. The other tubular-connection of the air-channel is connected by a hose 17 with the control-apparatus for the blowing air.

In the form of construction shown in Fig. 1

3 a blowing air-nozzle 18 is rigidly fixed to the carrier 10 for the operating levers of the gripper jaws and connected to the hose 17 by its tubular-connection 19. The nozzle 18 is arranged at such a height, with regard to the arm 8, that the jet of blowing air is directed under the sheet-corners sucked on and lifted by the suckers 9. The blowing air is controlled in such a manner that it begins to act after the lifting of the sheet corners or only after the gripper jaws have begun to work.

In the form of construction, shown in Figs. 4 and 5 the sucker 9 has an adjustable sucking mouth-piece. The gripper jaw 12 is mounted on a rocking shaft 20, on which a U-shaped holder 22 is mounted adjustably and adapted to be secured in the adjusted position by means of a clamping screw 21. The arms of said holder embrace the gripper-hub from both sides. On the bottom of the holder 22 a blower 25 is clamped by means of a clamping-bow 23 and clamping screws 24, the hose 17 for the blowing air being connected to said blower. The blower 25 comprises two blowing nozzles 26, 27, the nozzle 26 being directed so that the out-flowing air blows along the lower surface of the lifted portion of the sheet, the nozzle 26 being downwardly directed towards the surface of the pile so that the blowing air presses the sheets onto the pile. Both nozzles 26, 27 are arranged directly under the gripper jaw 12 and execute the same movements as the gripper jaw. The blowing nozzles may be adjusted on the rocking-shaft 20 with regard to the gripper jaw 12 after loosening of the clamping-screw 21 and turning of the holder 22, so that the direction of the jets of blowing air can always be adjusted in accordance with the manner of working of the sucker and of the gripper jaw.

It is not necessary that the blowing-nozzles 26, 27 participate in the oscillating-movement of the gripper jaw. They may be both stationary, or only the nozzle 26 may be stationary the nozzle 27 being connected with the gripper jaw. Each blowing-nozzle may evidently have its own supply-conduit, and the strength of each blowing jet may be regulated individually.

I claim:

1. A sheet lifting device working with suckers, comprising in combination with the suckers designed to lift the front-corners of the top-sheet from the pile of gripper jaws for clamping the front-edge of the lifted top-sheet against the suckers and for pulling said sheet off the pile, and blowing nozzles co-operating with said gripper jaws for blowing air into the gap between the lifted front-portion of the top-sheet and the pile.

2. A sheet lifting device as specified in claim 1, comprising in combination with each gripping jaw, two blowing nozzles, one of said nozzles being directed so that the jet of blowing air blows along the lower surface of the lifted sheet-portion, the other blowing-nozzle being downwardly directed towards the pile so that the air-jet holds the sheets on the pile.

3. A sheet lifting device as specified in claim 1, comprising in combination with each gripper jaw, two blowing-nozzles underneath said gripper jaw one directed so that the air-jet blows along the lower surface of the lifted portion of the sheet, the other being downwardly directed to blow the air onto the pile.

4. A sheet lifting device as specified in claim 1, comprising in combination with a gripper jaw, a rocking-shaft, a U-shaped holder for the gripper jaw adjustably mounted on said rocking-shaft, and two blowing-nozzles in said holder under said gripper jaw one blower nozzle being directed so that the air-jet blows along the lower surface of the lifted portion of the sheet and the other nozzle being directed to blow the air downwardly onto the pile.

5. A sheet lifting device as specified in claim 1, comprising in combination with a rock shaft, a gripper jaw adjustably mounted on said shaft, and two blowing nozzles carried by the shaft and disposed beneath and adjustable with the gripper jaw, one nozzle being directed so that the air jet blows along the lower surface of the lifted portion of the sheet and the other nozzle being directed to blow the air downwardly onto the pile.

In testimony whereof I affix my signature.

GEORG SPIESS.