March 13, 1956 J. P. DALTON 2,738,042

HANDLE FOR LUGGAGE

Filed Dec. 23, 1953 2 Sheets-Sheet 1

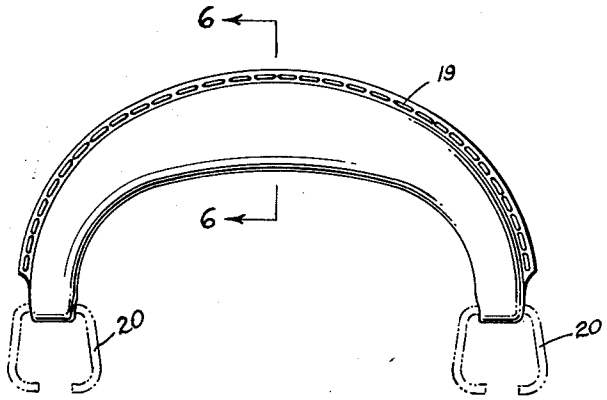

Fig. 1

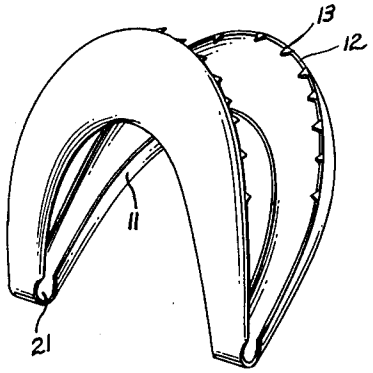

Fig. 3

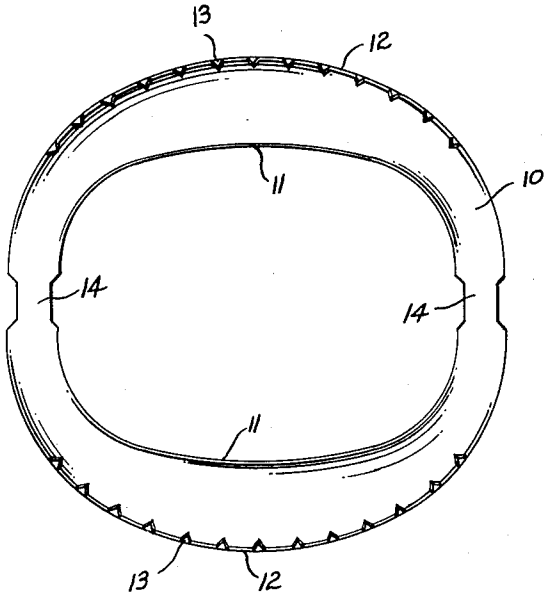

Fig. 2

INVENTOR.
JOSEPH P. DALTON
BY Joshua R. H. Potts
HIS ATTORNEY.

March 13, 1956 J. P. DALTON 2,738,042

HANDLE FOR LUGGAGE

Filed Dec. 23, 1953 2 Sheets-Sheet 2

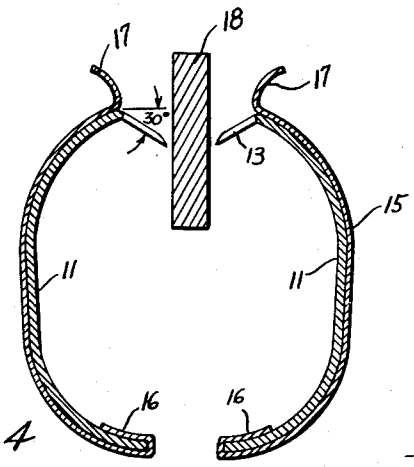

Fig. 4

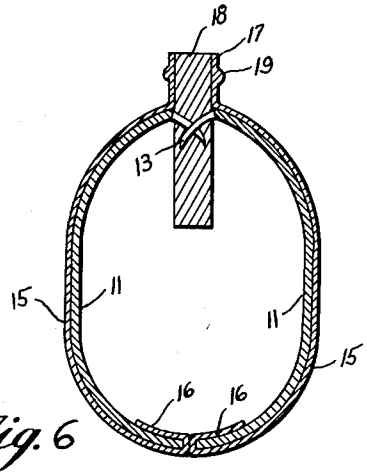

Fig. 6

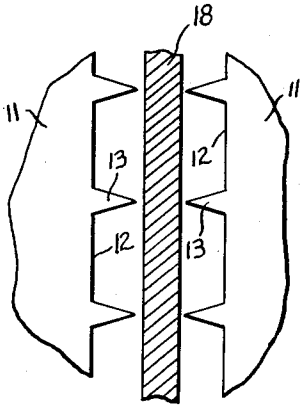

Fig. 5

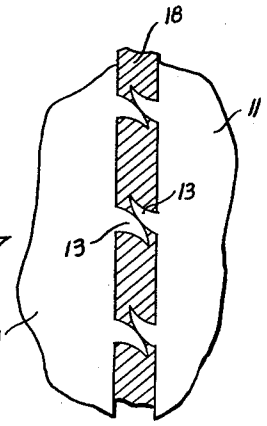

Fig. 7

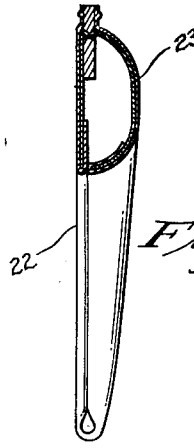

Fig. 8

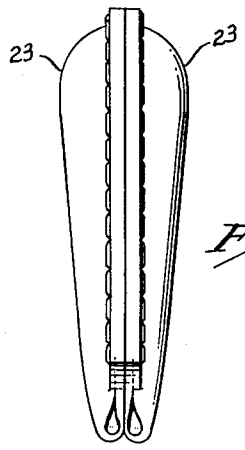

Fig. 9

INVENTOR.
JOSEPH P. DALTON
BY
Joshua R. H. Potts
HIS ATTORNEY.

United States Patent Office 2,738,042 Patented Mar. 13, 1956

2,738,042

HANDLE FOR LUGGAGE

Joseph P. Dalton, Berlin, N. J.

Application December 23, 1953, Serial No. 399,861

5 Claims. (Cl. 190—57)

This invention relates to improvements in handles for luggage and the like, and particularly to a novel handle structure which dispenses with some of the conventional steps of manufacture with a consequent reduction in manufacturing costs.

It is the present practice to manufacture luggage handles from a substantially ring-shaped one-piece metallic blank which is folded about its longitudinal axis in superimposed relationship with a section of carboard filler separating the complemental folded metal portions, which section protrudes from the peripheral edges thereof. The blank and cardboard are ordinarily covered with a thin covering of leather or the like and the entire assembly is held together by stitching, which is taken through the leather and cardboard.

While this particular construction has served its purpose, it has had the disadvantage of being time consuming, in that it is a difficult operation to sew the leather and cardboard together due to the natural tendency of the complementally folded metal portions of the blank to spread apart. As a result, manufacturing costs are proportionately high.

It is an object of this invention, therefore, to provide an improved handle for luggage.

It is another object of this invention to provide an improved handle for luggage which can be manufactured in a shorter time than conventional handles and at a reduction in cost.

It is a further object of this invention to provide an improved handle for luggage which dispenses with the necessity of stitching to hold the handle in assembled relationship.

It is still another object of this invention to provide an improved handle for luggage in which the handle is provided with locking pins to automatically lock the handle in assembled relationship, without the necessity of stitching.

These and other more detailed objects and advantages such as arise in connection with carrying out the present invention will in part become apparent, and in part hereinafter be stated as the description of the invention proceeds.

The invention, therefore, comprises a ring-like metallic blank of substantially circular cross-section, having a substantially U-shaped channel section for the majority of its circumference except for diametrically opposed flat wall sections, the outermost edge of the channel being provided with teeth-like locking pins. The said blank is folded along its longitudinal axis which passes through said flat sections so that the opposite channel portions are made to lie in a complementally superimposed relationship. The teeth along the channel edges are so arranged as to lie in confronting relationship when the said blank is folded. A cardboard filler is then inserted between the complemental wall portions and the said wall portions are pressed together from opposite sides thereof so that the teeth-like locking pins engage the cardboard filler in

locking relationship. The thus assembled handle is then covered with a covering of leather or the like.

For a fuller and more complete understanding of the invention, reference may be had to the following description and the accompanying drawings, wherein similar numerals refer to similar parts throughout the different views.

Figure 1 is a front elevational view of the handle of the present invention in assembled relationship.

Figure 2 is a top plan view of the metallic blank of the present invention prior to bending to shape, showing the teeth-like locking pins and diametrically opposed flat sections.

Figure 3 is a perspective view of the metallic blank of Fig. 2 illustrating a stage in the fabrication of the handle after the said blank has been folded.

Figure 4 is a cross-sectional view of the handle of the present invention showing the opposed complemental sides of the metallic blank with the teeth-like locking pins carried thereby, the cardboard filler strip interposed therebetween, and a covering material adhered to the outer surface of said blank.

Figure 5 is a top plan view partly in section, with parts broken away, showing the metallic blank folded with the locking pins in confronting relationship and the cardboard filler therebetween.

Figure 6 is a sectional view taken along the line 6—6 of Fig. 1 showing the present handle in assembled relationship with the locking pins secured in the cardboard filler in locking engagement, and showing the covering material in place and simulated stitching embossed thereon.

Figure 7 is a plan view of the present handle partly in section, with parts broken away, showing how the locking pins engage each other in locking relationship together with the cardboard filler strip.

Figure 8 illustrates a modified form of this invention in which one side of the handle is made flat, and illustrating in section the details of construction.

Figure 9 is an end-elevational view of the modified form of this invention shown in Fig. 8, wherein two handle members are employed in adjacent relationship.

Referring to the drawings, a ring-like metallic blank **10** is shown in Figs. 2 and 3 as being of substantially circular configuration and being provided with substantially U-shaped circumferential portions **11** lying in opposed relationship. The said U-shaped portions **11** are provided on the external wall **12** thereof with teeth-like locking pins **13** for a purpose to be described below. The said U-shaped portions **11** are separated by necked-down flat sections **14** which lie in diametrically opposed relationship.

A covering material **15** made from a thin sheet of leather, plastic or the like is cut to substantially the same shape as the ring-like blank **10**, but with excess material overhanging the edges of said blank, as shown at **16** and **17** in Fig. 4.

The said blank is folded about the axis which passes through the centers of said flat sections **14** so that the respective U-shaped channel portions **11** lie in confronting complemental relationship as shown in Fig. 3. When the blank is thus folded, the locking pins **13** are bent slightly downwardly as shown in Fig. 4 to make an angle of approximately 30° with the horizontal. These locking pins **13** are so arranged about the peripheral edge **12** of the U-shaped portions **11** as to lie in confronting relationship when the said blank is folded, as shown in Fig. 5.

A cardboard filler section **18** of approximately ⅛-in. thick is cut to approximate the shape that the metallic blank **10** assumes when folded into the position shown in Fig. 1, and said filler is then inserted between the complementally opposed portions of the blank **10** so as

to extend outwardly therefrom in ridge-like fashion, as shown in Figs. 4, 5 and 6. The opposed U-shaped portions 11 are then forcibly drawn together so that the locking pins 13 engage the cardboard filler 18 as shown in Figs. 6 and 7. As depicted therein, the locking pins 13, lying in opposed relationship, will engage one another and be deflected downwardly as shown in Fig. 6 and axially as shown in Fig. 7. This engagement provides a locking action which locks the U-shaped portions 11 and filler 18 together in assembled relationship.

The excess covering material 15 overhanging the edges at 17 is then adhesively secured to the cardboard filler 18, extending upwardly and outwardly from between the opposed members 11. Any excess material 15 extending beyond the uppermost point of the cardboard filler 18 is trimmed off and the embossment 19 is provided on the external surface of said covering 15 along the filler 18 so as to provide the appearance of being stitched, as shown in Figs. 1 and 6. This completes the assembly of the handle, per se. Rings 20 for attaching the handle to a piece of luggage or the like, shown in phantom in Fig. 1, may be inserted in the loops 21 provided therefor by the bending of the metallic blank 10, as shown in Fig. 3.

A modified form of the present invention which utilizes two handles in adjacent relationship is shown in Figs. 8 and 9. It will be seen from these figures that the metallic blank 10 is provided with one wall of U-shaped configuration and an opposite wall which is flat. Thus, when assembling the handle as described above, the finished handle will approximate the shape shown in Fig. 8 with one flat wall 22 and a convex wall 23. Two such handle members are used together with the flat walls 22 thereof in adjacent relationship as shown in Fig. 9.

It will be seen from the above description of the present invention that a novel handle is provided for luggage and the like which facilitates the manufacture thereof, in that it dispenses with the necessity of holding the handle members together by stitching, as is conventionally done. This is achieved through the novel locking pin structure as described. Needless to say that a reduction in the time consumed in manufacturing should result, with a comparative reduction in manufacturing costs. Furthermore, the locking action produced by the locking pins of the present invention is more positive and more permanent than the conventional stitching, which is subject to failure under extreme wear.

While the present discussion of this invention has been limited to the above-described preferred embodiment, it is to be understood that variations thereof are possible without departing from the spirit of the invention. It is not intended, therefore, that the invention be limited to the particular embodiment disclosed, but only to the inventive concept as defined by the appended claims.

What is claimed is:

1. In a handle for luggage, a body portion formed of a substantially ring-shaped blank folded upon itself to form opposed complemental U-shaped sections with confronting edges, downwardly depending locking pins in direct alignment and deflected engagement on the confronting edges of said sections, a filler member interposed between said opposed complemental sections extending marginally above said body portion, the said locking pins being locked in said filler member so as to hold the opposed complemental sections and filler member in assembled relationship, and a cover material adhesively secured to the outside of said body portion and filler member extending therefrom.

2. In a handle for luggage, a body portion formed of a ring-shaped blank of substantially U-shaped cross section folded upon itself to form opposed convex complemental sections with confronting edges, teeth-like locking pins on the confronting edges of said sections, the said pins lying in opposed relationship and depending downwardly at an angle of approximately 30° from the horizontal, a cardboard filler member interposed between said complemental sections and extending marginally above said body portion, the said locking pins being locked in said filler member and in deflected engagement so as to hold the opposed complemental sections and filler member in assembled relationship, and a cover material adhesively secured to the outside of said body portion and filler member extending therefrom.

3. In a pair of complemental luggage handles intended for use in assembled relation, a handle comprising, a body portion formed of a ring-shaped blank folded upon itself to form opposed complemental sections with confronting edges, one of said complemental sections being flat and the other convex, teeth-like locking pins on the confronting edges of said sections, the said pins lying in directly opposed relationship and depending downwardly at an angle of approximately 30° from the horizontal, a cardboard filler member interposed between said complemental sections and extending marginally above said body portion, the said locking pins being locked in said filler member and in deflected engagement so as to hold the opposed complemental sections and filler member in assembled relationship, and a cover material adhesively secured to the outside of said body portion and filler member extending therefrom, the said cover material being embossed at the area of said filler member to simulate stitching.

4. In a handle for luggage, a body portion formed of a ring-shaped blank of substantially U-shaped cross section folded upon itself to form opposed convex complemental sections with confronting edges, teeth-like locking pins on the confronting edges of said sections, the locking pins on said opposed complemental sections lying in direct alignment with one another, a filler member interposed between said complemental sections and extending marginally above said folded body portion, the said aligned locking pins clinchingly engaging each other within said filler material so as to hold the opposed complemental sections and filler member in assembled relationship, and a cover material adhesively secured to the outside of said body portion and filler member extending therefrom.

5. In a handle for luggage, a body portion formed of a ring-shaped blank of substantially U-shaped cross section folded upon itself to form opposed convex complemental sections with confronting edges, opposed teeth-like locking pins on the confronting edges of said sections, the said opposed pins lying in direct alignment with one another and depending downwardly at an angle of approximately 30° from the horizontal, a semi-rigid filler member interposed between said complemental sections and extending marginally above said folded body portion, the locking pin on one of the confronting edges deflectingly engaging an opposed pin on the other confronting edge so as to become clinched within the said filler member holding the complemental sections and filler member in assembled relationship, and a cover material adhesively secured to the outside of said body portion and filler member extending therefrom.

References Cited in the file of this patent

UNITED STATES PATENTS

2,519,604	Romolt	Aug. 22, 1950
2,563,134	Romolt	Aug. 7, 1951

FOREIGN PATENTS

343,463	Great Britain	Feb. 16, 1931