ULTRA-VIOLET RADIATION FLAME MONITOR

Filed May 16, 1961 5 Sheets-Sheet 1

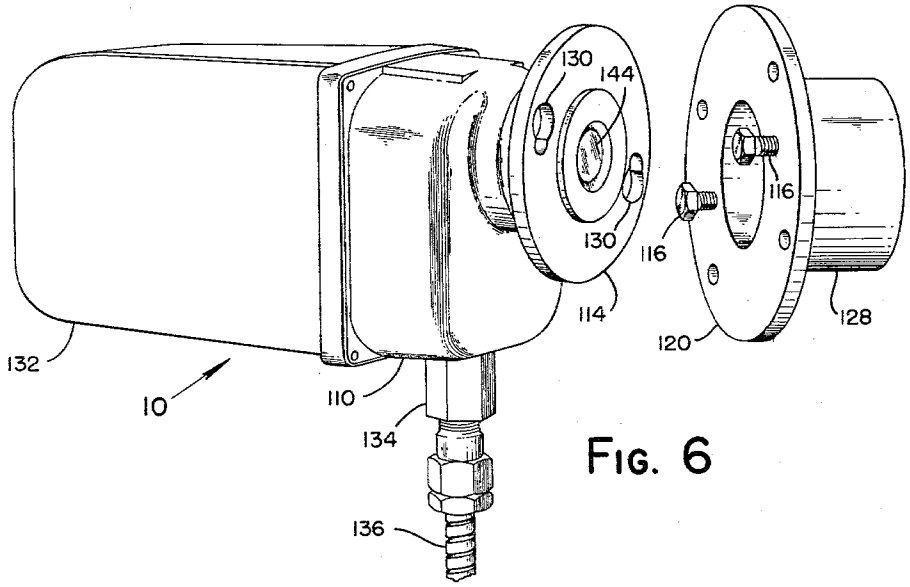

FIG. 6

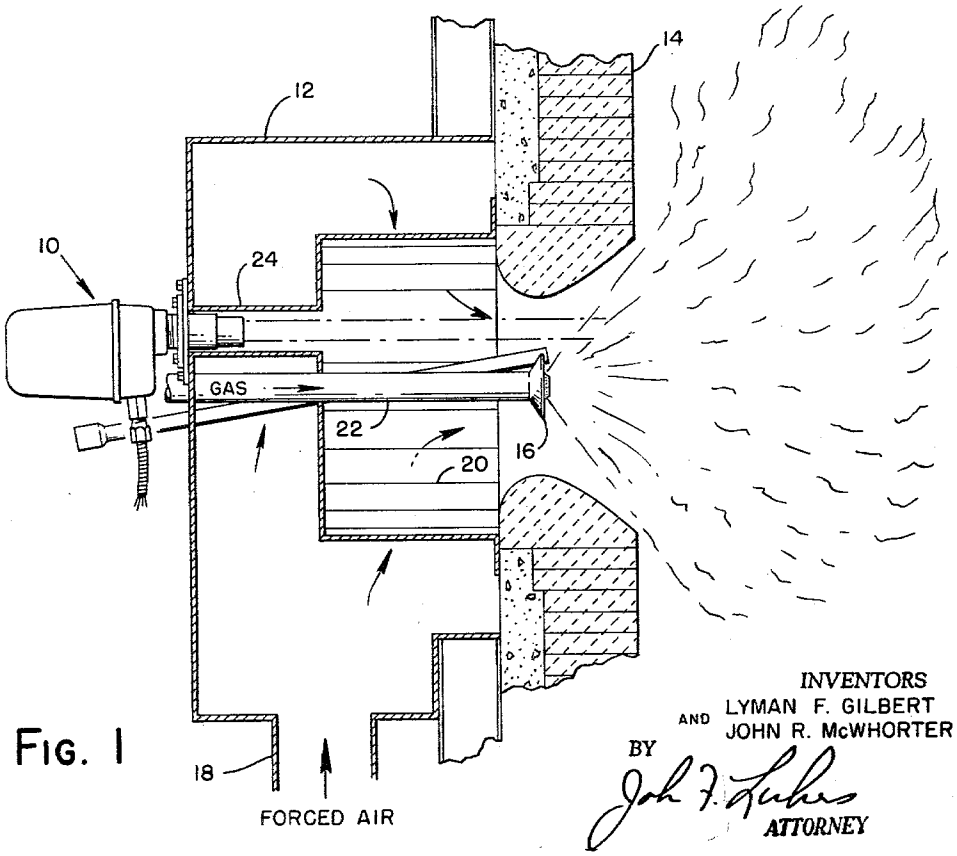

FIG. 1

INVENTORS
LYMAN F. GILBERT
AND JOHN R. McWHORTER
BY John F. Lukes
ATTORNEY

ULTRA-VIOLET RADIATION FLAME MONITOR

Filed May 16, 1961 5 Sheets-Sheet 2

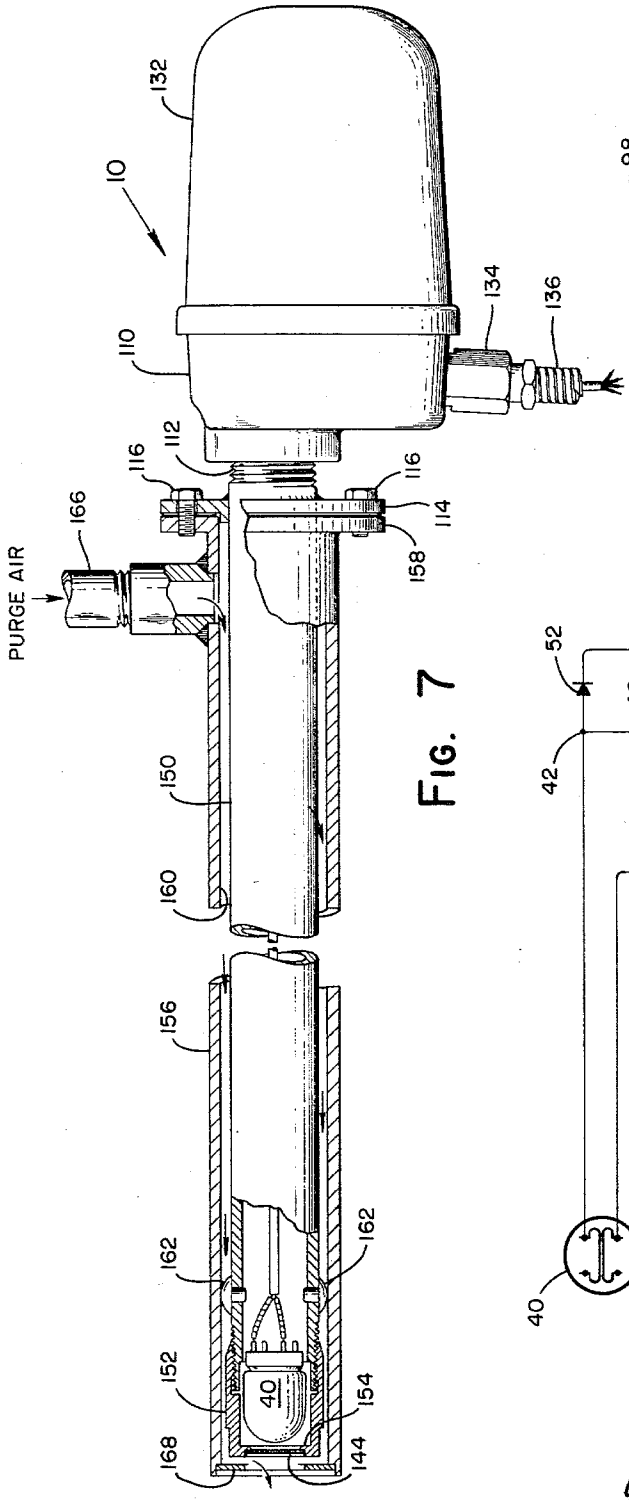

FIG. 7

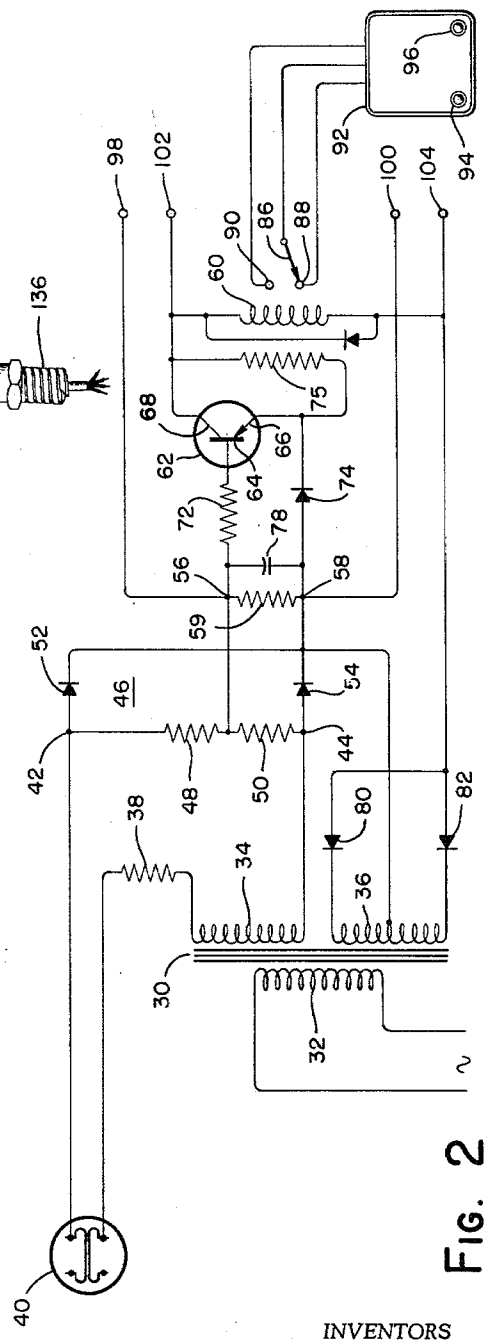

FIG. 2

INVENTORS
LYMAN F. GILBERT
AND JOHN R. McWHORTER
BY John F. Lubro
ATTORNEY

ULTRA-VIOLET RADIATION FLAME MONITOR

Filed May 16, 1961 5 Sheets-Sheet 3

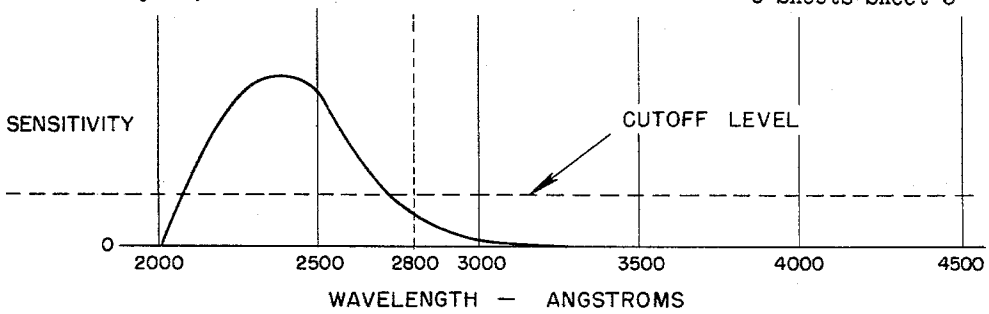

FIG. 4

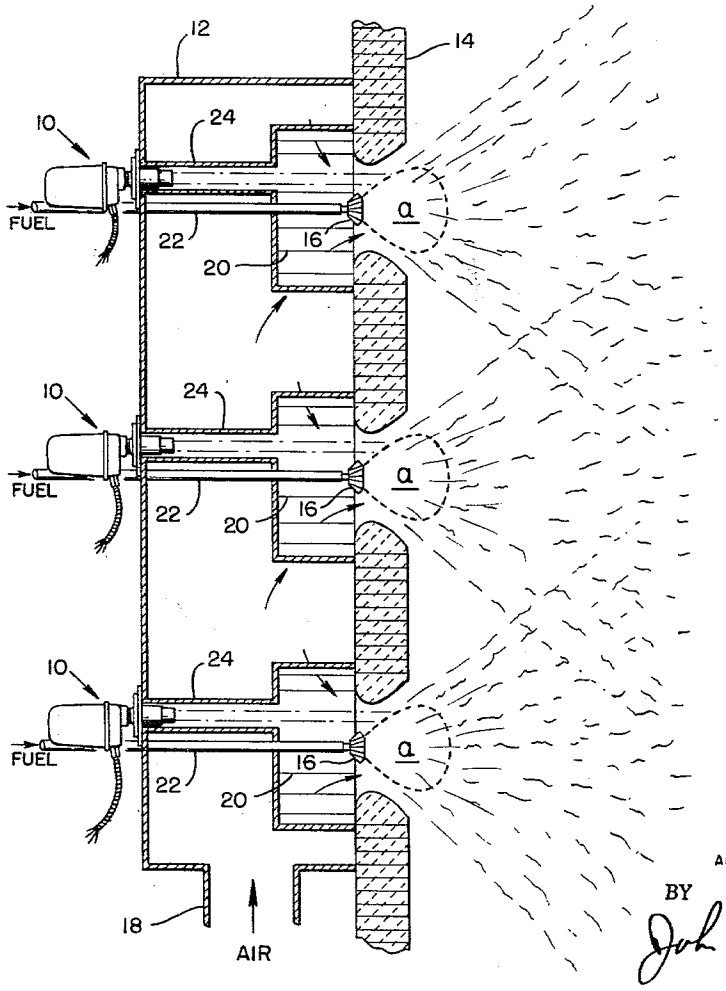

FIG. 3

INVENTORS
LYMAN F. GILBERT
AND JOHN R. McWHORTER
BY John F. Lubera
ATTORNEY

ULTRA-VIOLET RADIATION FLAME MONITOR

Filed May 16, 1961 5 Sheets-Sheet 4

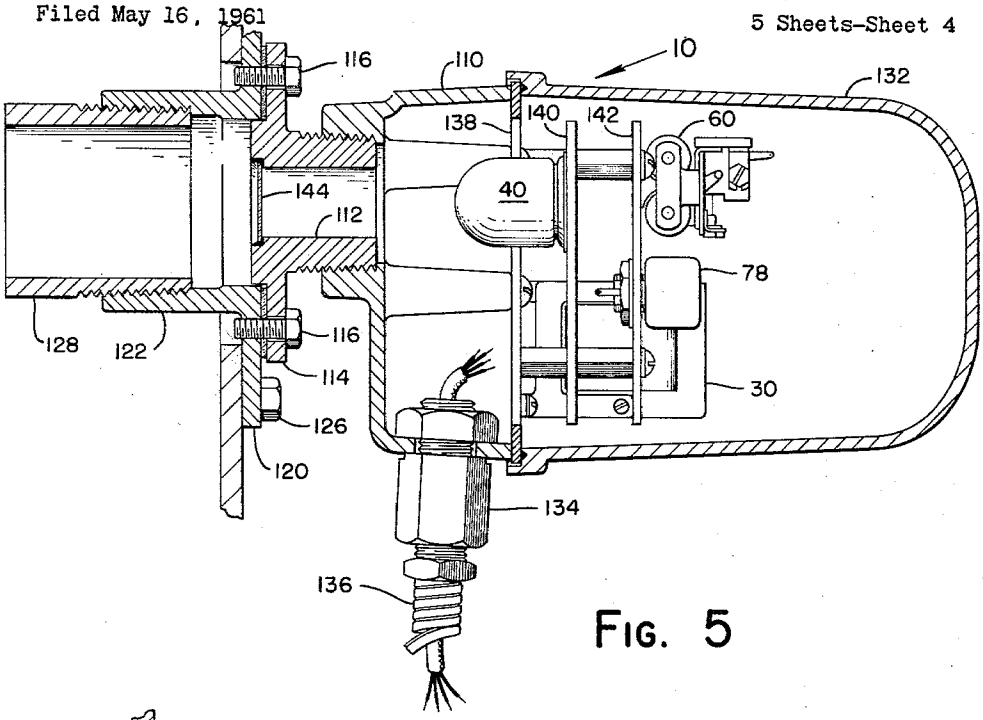

FIG. 5

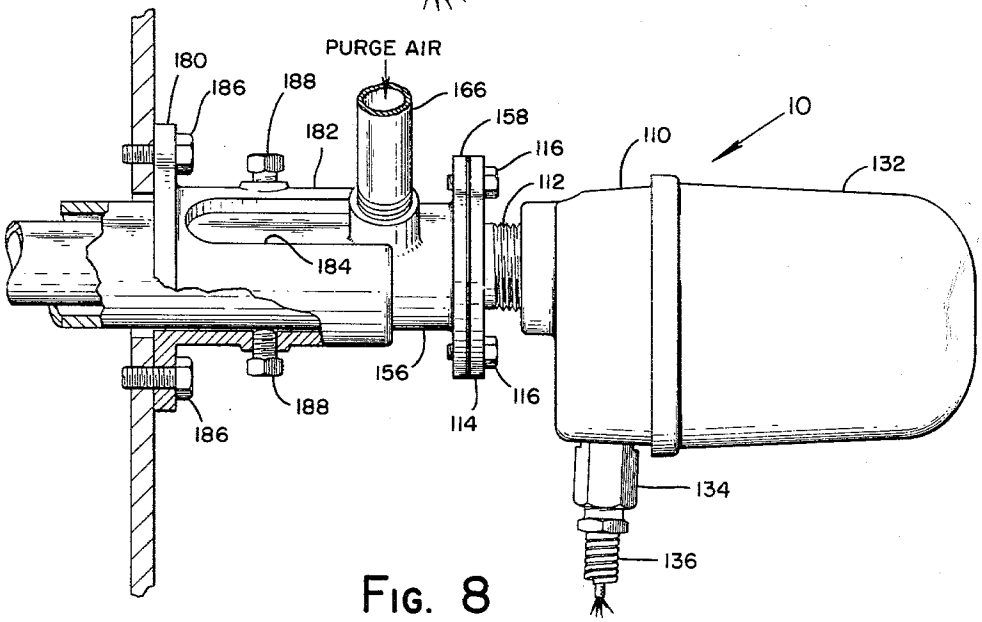

FIG. 8

INVENTORS
LYMAN F. GILBERT
AND JOHN R. McWHORTER
BY John F. Lukas
ATTORNEY

ULTRA-VIOLET RADIATION FLAME MONITOR

Filed May 16, 1961

5 Sheets-Sheet 5

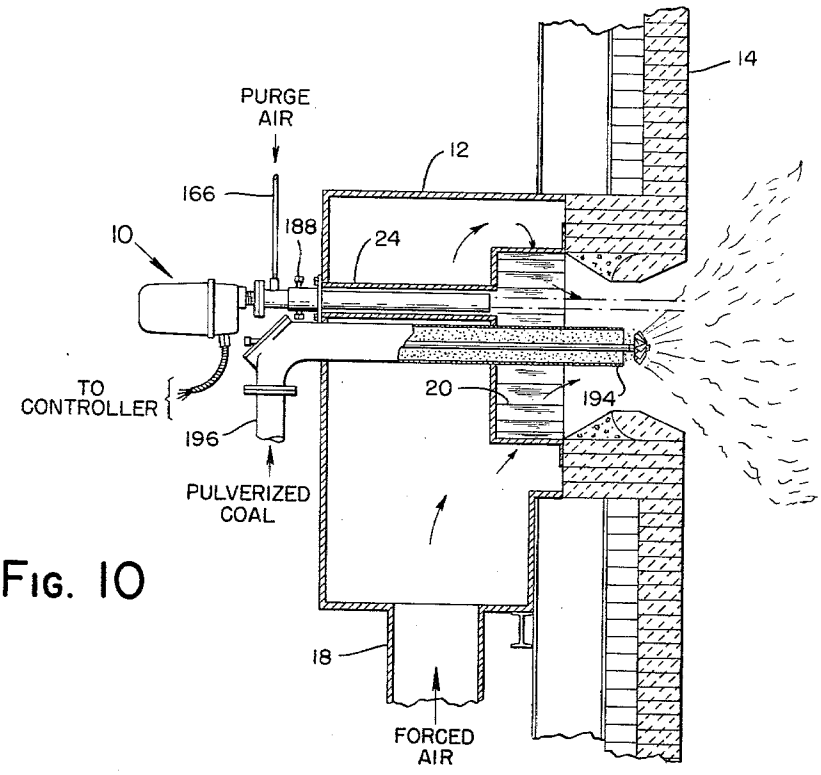

FIG. 10

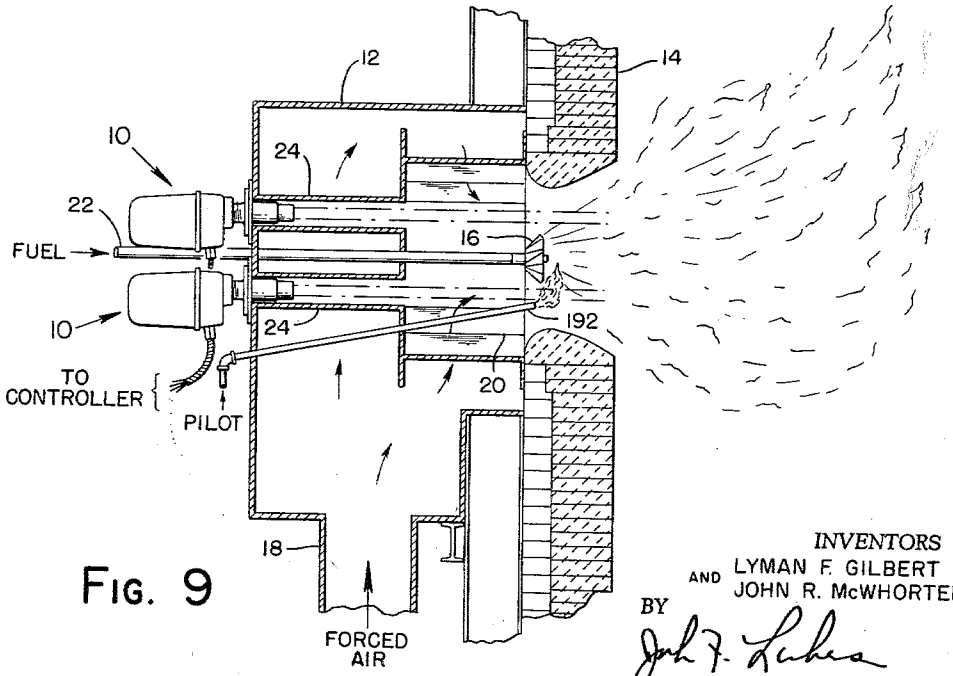

FIG. 9

INVENTORS
LYMAN F. GILBERT
AND JOHN R. McWHORTER
BY John F. Lubera
ATTORNEY

United States Patent Office

3,185,846

Patented May 25, 1965

1

3,185,846

ULTRA-VIOLET RADIATION FLAME MONITOR

Lyman F. Gilbert, Lyndhurst, and John R. McWhorter, Cleveland, Ohio, assignors to Bailey Meter Company, a corporation of Delaware

Filed May 16, 1961, Ser. No. 110,414
16 Claims. (Cl. 250—83.6)

This invention relates to monitoring apparatus for detecting or monitoring a combustion process and more particularly to apparatus for monitoring the flame of combustion in a closed combustion chamber.

In the past the accurate monitoring or detection of a flame within a combustion chamber of furnace has been a substantial problem from a safety consideration as well as from an efficiency or economy consideration. For example, if during startup a burner in a furnace fails to ignite a hazardous accumulation of fuel could result which would not only impair the safety of operating personnel but also delay use of the equipment while the situation is remedied. Similar results would occur upon accidental extinguishment of a burner.

In the past many different devices and theories have been exploited in attempts to accurately monitor the flame in a closed combustion chamber. Devices such as thermocouples or flame rods responsive to heat and conductivity of flames have been utilized. Light sensitive devices such as photoelectric tubes have also been widely used. In practically all instances, however, these devices have been unreliable, forcing the operator to rely on crude devices such as sighting tubes to monitor the combustion flame. The thermocouple and flame rod devices deteriorate rapidly from errosion and corrosion and are only adaptable to specific types of burners. Photoelectric tubes have been proven unreliable in that they respond to light from any source and not only light from the flame being monitored.

The most successful devices for monitoring a combustion flame are those devices which respond to invisible radiation such as ultraviolet or infrared emitted by a flame. Even these, however, are subject to limitations which seriously affect their reliability. In the case of the infrared detector refractory materials within the furnace emit infrared radiation and the detector will respond to infrared radiation emitted by brickwork in addition to that emitted by the flame to be monitored.

In the case of the ultraviolet detectors currently available some response to radiation from other sources also occurs even though less than with the infrared detector. However, in the past the complexity of the circuitry required to achieve proper operation of the ultraviolet detector has created additional problems and limitations.

The present commercially available ultraviolet detectors employ a detecting tube which is well known to those skilled in the art as a Geiger-Mueller tube and which essentially comprises a cylindrical cathode and a centered anode wire all enclosed in a glass envelope. The tube is filled with a gas and a direct voltage of predetermined magnitude is applied across the two electrodes. When a photon of ultraviolet radiation strikes the cathode an instantaneous gas discharge will occur causing the tube to generate an electrical pulse in its associated circuit. Thus, a pulse will be generated for each quantum of energy received, the number of pulses in a unit time or the pulse frequency being an indication of the intensity of the radiation.

The Geiger-Mueller tube employed may be operated self-quenching or non-self-quenching depending upon the nature of the gas filling the tube and the tube circuit. If the tube is non-self-quenching a single quantum of

2

energy will produce self sustaining ionization of the gas under the effect of the direct voltage potential thus requiring external circuit means for interrupting the ionization to establish the pulse output. In the case of the self-quenching operation the sustained ionization will not occur due to the characteristics of the tube and the magnitude of the voltage source. While self-quenching operation is more desirable, from experience it has been found that the self-quenching Geiger-Mueller tube has only a short operating life and thus is lacking in the durability necessary for practical application. Accordingly, currently available ultraviolet detectors employ non-self-quenching Geiger-Mueller tubes and external quenching circuits.

While the non-self-quenching Geiger-Mueller tube has been found more desirable in a flame detector than the self-quenching type, the use of an external quenching circuit increases materially the complexity of the detector. Also, it has been found that the detector tube must be positioned in close proximity to the external quench circuit to prevent the capacitive pickup of the lead wires from affecting the operation of the detector. In many applications the ambient heat to which the detector is exposed causes rapid deterioration of the components of the quench circuit even though the detector tube itself can withstand the temperatures encountered.

It is a principal object of the invention to provide an improved flame detector for monitoring a combustion flame. In a preferred embodiment of our invention we accomplish this object by utilizing a gas-filled detector tube sensitive only to ultra-violet light such as the present commercially available ultraviolet detector tube manufactured by McGraw Edison Company. This tube is provided with a pair of spaced parallel electrodes to which a predetermined potential is applied. When ultra-violet radiation is received ionization of the filling gas will occur to cause a continuous gas discharge and current flow between the electrodes as long as the potential exists.

We preferably connect the electrodes of this detector tube to an alternating current circuit which causes the electrodes to alternately act as cathode and anode and thereby conduct an alternating current in response to the existence of ultra-violet radiation. We have found that during each polarity reversal of the alternating current source the tube is automatically and positively quenched and that separate quenching circuitry is not needed as in the case of the non-self-quenching Geiger-Mueller tube.

The number of half cycles in which conduction occurs in a predetermined period is an indication of the intensity of the ultraviolet radiation and thus the condition of the flame. We preferably incorporate integrating and time delay means for causing actuation of a manifesting device at a predetermined level of half cycle conduction to provide a manifestation of the flame condition.

A further object of our invention is to provide a flame detector having circuitry which can be positioned remotely from the detector tube.

Another object of our invention is to limit the viewing angle of a flame detector in accordance with the hydrogen-carbon ratio of the burning fuel to provide for maximum sensitivity and accuracy.

Still another object of our invention is to provide an improved housing for mounting a flame detector on the wall of the combustion chamber.

An additional object of our invention is to provide an air purge for cleaning a sighting window of a flame detector with orifice means for controlling the discharge of the purging air to achieve maximum cleaning efficiency.

Other objects and advantages will become apparent

from the following description taken in connection with accompanying drawings wherein:

FIG. 1 is a schematic illustration of a flame detector monitoring the flame of a gas burner;

FIG. 2 is a schematic illustration of the electrical circuitry of the flame detector;

FIG. 3 is a schematic illustration of several flame detectors applied to a multiple burner furnace;

FIG. 4 is a senistivity curve for the flame detector;

FIG. 5 is an elevational view of the flame detector;

FIG. 6 is a perspective view of the flame detector illustrated in FIG. 5;

FIG. 7 is an elevational view in partial section of another embodiment of the flame detector;

FIG. 8 is an elevational view of the detector illustrated in FIG. 7 and an adjustable mounting means therefor;

FIG. 9 is a schematic illustration of two flame detectors monitoring a main burner and a pilot burner; and

FIG. 10 is a schematic illustration of the detector of FIG. 7 monitoring a coal burner flame.

Referring now to FIG. 1 of the drawings, there is shown a flame detector or monitor indicated generally by the reference numeral **10** mounted on the windbox **12** of a furnace **14** to view the flame produced by the burning of fuel and air at burner **16**. Air is supplied to the windbox **12** from the duct **18** and is supplied to the combustion chamber within the furnace **14** through conventional radiators indicated by the reference numerals **20**. The furnace **14** is illustrated as a gas-fired type having a pipe **22** for supplying fuel to the burner **16**. In FIG. 1 the detector **10** is shown as positioned at the end of a pre-existing sighting tube **24** to view a predetermined area of the flame at burner **16**.

Referring now to FIG. 2 of the drawings, the electric circuitry of the flame detector **10** includes a transformer **30** having a primary winding **32** connected across an alternating current source and a pair of secondary windings **34** and **36**. The secondary winding **34** is connected in series with a current limiting resistor **38** and an ultraviolet detector tube **40** across the input terminals **42** and **44** of a full wave rectifier circuit **46**. The rectifier circuit **46** comprises a bridge circuit having a pair of resistors **48** and **50** forming one side thereof and a pair of diode rectifiers **52** and **54** forming the other side thereof. When the tube **40** is conductive in response to ultraviolet radiation as will later be described, an alternating current input will be supplied to termianls **42** and **44** of the bridge circuit **46** and a full wave rectifier signal will appear at output terminals **56** and **58** across output resistor **59**.

The output of rectifier circuit **46** is amplified and utilized to energize a relay **60** to manifest a condition of conductance of the tube **40** in response to ultraviolet radiation. The amplifier circuit comprises a PNP transistor **62** having a base electrode **64**, an emitter electrode **66** and a collector electrode **68**. The base electrode **64** is connected through a resistor **72** to terminal **56** while the emitter electrode **66** is connected through a diode **74** to terminal **58**. A resitsor **75** is connected across the emitter and collector electrodes. A capacitor **78** is connected across the input of the amplifier and cooperates with resistor **72** to establish integrating and time delay operation of the amplifier and relay circuit.

A D.-C. power supply for transistor **62** and relay **60** is established by secondary winding **36** and diodes **80** and **82** which connect the ends of winding **36** to one end of relay coil **60**. To complete the circuit the centertap of winding **36** is connected to junction **58**.

The relay coil **60** is effective when energized to move contact arm **86** out of engagement with fixed contact **88** and into engagement with fixed contact **90** to produce a condition in alarm device **92** such as energization of light **94**. Similarly, in the illustrated position of contact arm **86** light **96** may be energized to indicate the absence of ultraviolet radiation or the absence of a flame as will later be described. Additionally, in the position illustrated an audible alarm (not shown) may be energized by contacts **86** and **88**.

Output terminals **98** and **100** are provided for transmitting an analog signal appearing at output terminals **56** and **58** proportional to the intensity of the ultraviolet radiation to a remote meter or recording device (not shown). Similarly, the digital signal representative of flame or no flame conditions appearing across relay coil **60** may be transmitted to remotely located equipment (not shown) by means of terminals **102** and **104**.

The tube **40** comprises a gas filled glass envelope having a pair of spaced parallel electrodes therein and may take the form of the present commercially available ultraviolet detector tube manufactured by McGraw Edison Company. In operation of this tube, when a predetermined potential is applied to the electrodes ionization of the filling gas will occur when a single photon of ultraviolet radiation within a predetermined wave length band enters the tube. As a result the tube will conduct and a current will flow in the circuit.

When ionization of the gas occurs it will continue as long as the potential across the electrodes remain above a predetermined level even though the ultraviolet radiation terminates. It is necessary however, to periodically quench or extinguish the tube to enable it to sense the extinguishment of the flame it is monitoring. In the case of the Geiger-Mueller tube, this has been accomplished by providing a separate circuit which in effect interrupts the potential across the electrodes a predetermined time after ionization occurs to cause the tube to produce pulses.

The circuit shown in FIG. 2 eliminates the need for separate quenching circuits by utilizing the inherent polarity reversing characteristics of an alternating potential source to accomplish the quench. The equal sized electrodes of the tube **40** shown in FIG. 2 renders the tube operative when either electrode is positive and the other electrode negative with respect thereto. The electrodes being of equal size and of identical construction alternate as anode and cathode during operation of the tube and thus a change in polarity of the applied potential during the continuous existence of ultraviolet radiation will only affect the direction of current flow through the tube. More particularly assume that ionization of the gas in tube **40** occurs in response to ultraviolet radiation during a half cycle of the A.-C. source potential. Ionization of gas will cause the tube **40** to conduct current in one direction for the remainder of the half cycle until the potential decreases to a predetermined cutoff potential below which ionization of the filling gas can no longer occur. At this potential the tube becomes quenched and no longer conducts. During the following half cycle a single photon of ultraviolet radiation will similarly affect ionization of the gas and resulting conduction of the tube **40** until the potential decreases to the quench or cutoff potential near the end of the half cycle. It is apparent that during each half cycle of the A.-C. source the existence of ultraviolet radiation is necessary to cause the tube to conduct during that half cycle. The continuous existence of a flame which generates ultraviolet energy will thus cause the tube to conduct an alternating current and establish an alternating current input to rectifier circuit **46**.

The above described detector tube manufactured by McGraw Edison Company has been found to require an initial ionization potential of approximately 700 volts and to have a cutoff potential of approximately 350 volts. Therefore the winding ratio between windings **32** and **34** is preferably sufficient to establish a voltage across winding **34** in the order of 700 volts R.M.S. The resistor **38** is sized to limit the maximum current flow in the tube circuit to approximately 3 ma.

Transformer winding **36** and diodes **80**, **82** form a power supply which is effective to bias the transistor **62** non-conductive in the absence of an output signal from

rectifier circuit 46 caused by response of tube 40 to ultraviolet radiation. Diode 74 in combination with resistor 75 is operative to establish a predetermined negative bias on the emitter 66 to insure that the emitter 66 will be more negative than the base electrode 66 and that the transistor 62 will be non-conductive when the output of rectifier circuit 46 is zero.

If conduction of the tube 40 should occur in response to the existence of ultraviolet radiation the resulting output signal from rectifier circuit 46 will drive the base electrode 64 negative with respect to emitter electrode 66. At this condition the transistor 62 will become conductive to energize relay 60 which in turn actuates contact arm 86 and causes alarm 92 to function in the hereinbefore described manner. In effect the transistor 62 acts as an electronic switch responsive to the output of rectifier circuit 46 to control energization of relay 60.

The circuitry described inherently provides fail safe operation in the monitoring of a flame in a combustion chamber. If due to component failure or some other condition the circuit in tube 40 becomes inoperative, the relay 60 will become deenergized to indicate a flame out condition and cause the operator to investigate.

In FIG. 3 there is illustrated schematically the flames produced by adjacent burners of a multiple burner gas furnace having flame detectors 10 arranged to monitor the flames at the adjacent burners. The burners, sighting tubes and other parts shown in FIG. 3 are similar in construction to the single burner furnace illustrated in FIG. 1 and for convenience have been denoted by like reference numerals.

It has been found that in the burning of a gaseous fuel such as natural gas, containing carbon and hydrogen ultraviolet radiation in the wave length range of 2000–2800 angstroms is only emitted in the flame area designated by reference letter (*a*) immediately surrounding the burner tip. From the outer edges of the flame, however, and from incandescent refractory walls ultraviolet and cosmic radiation is emitted in the wave length region between 2800 and 4000 angstroms.

To achieve maximum operating efficiency of the flame detector and to achieve discrimination between adjacent burners and other sources of radiation it is desirable to limit response to the 2000–2800 angstrom wave length range which is unique to the area of the flame adjacent the burner. However, as a practical matter a sharp cutoff in response at 2800 angstroms cannot be achieved and it is necessary to tolerate or compensate for limited response of the tube 40 to ultraviolet radiation of wave lengths greater than 2800 angstroms. In FIG. 4 the particular sensitivity curve for the tube 40 has been plotted. It will be noted that as the radiation wave length increases toward 2800 angstroms there is a marked decrease in sensitivity until a predetermined level is reached from which the sensitivity more gradually decreases until zero sensitivity is reached at approximately 3250 angstroms. Thus, in the region between 2800 and 3250 angstroms some sensitivity exists even though slight.

It will be apparent from the curve in FIG. 4 and the multiple burner arrangement of FIG. 3 that a condition can conceivably occur where a flame detector positioned to view the flame produced by one burner will under high flame conditions "see" and respond to radiation above 2800 angstroms emitted by the outer area of a flame on an adjacent burner or respond to such longer wave length radiation from the refractory wall.

It has been found, however, that the low sensitivity of the detector tube 40 to steady radiation above 2800 angstroms results in only intermittent conduction of the tube as compared to its response to a steady source of radiation in the range of 2000 to 2800 angstroms which produces conduction of the tube during each successive half cycle of the A.C. source. Thus, when the radiation is above 2800 angstroms an intermittent current may flow through the tube circuit while a steadier A.-C. current will flow when the radiation is in the range of 2000 to 2800 angstroms.

The circuit including capacitor 78 and resistor 72 is effective to discriminate between alternating currents produced by ultraviolet radiation in the range of 2000 to 2800 angstroms and longer wave length radiation. Additionally, this circuit provides a time delay to prevent actuation of relay 60 in response to momentary interruptions in radiation caused by flame flicker or only momentary burner ignition. More particularly the capacitor 78 has a predetermined time constant depending on its size and the ohmic value of resistor 72. In the case of radiation above 2800 angstroms the intermittent current flow in the circuit will be insufficient to charge capactor 78 and bias transistor 62 conductive. However, if a steady alternating current flow occurs in response to radiation in the range of 2000 to 2800 angstroms the output of rectifier 46 will be sufficient to charge capacitor 78 and thereby drive the base electrode 64 negative to effect energization of relay 60. In effect, the capacitor 78 and resistor 72 integrate the output of rectifier 46 and operate to bias transistor 62 conductive at a predetermined output condition of rectifier 46 and conduction rate of tube 40 indicated by the dashed line in FIG. 4 which corresponds to the existence of invisible ultraviolet radiation only in the range of 2000 to 2800 angstroms. Thus, the circuit functions to establish a sharp cutoff in response to 2800 angstroms to provide the desired discrimination.

When a burner being monitored becomes extinguished or is initially ignited it is desired to delay response of the detector for a predetermined time to insure that the condition desired to be detected such as flame failure or flame existence has occurred. This time delay is provided by the charging and discharging time constants of capacitor 78. Thus, when the output of rectifier 46 changes from zero to maximum output conditions or vice versa transistor 62 will not be responsive until discharge or charging of capacitor 78 has occurred depending upon whether ignition or extinguishment has occurred. Thus, the circuit cannot respond to flame flicker or other conditions of temporary duration.

FIGS. 5 and 6 illustrate the physical construction of the flame detector 10 illustrated in FIG. 1. More particularly there is shown a supporting casing 110 having at the left end thereof as viewed in FIG. 5 an internally threaded opening for detachably receiving the threaded tubular projection 112 of a flange 114. The flange 114 is attached by bolts 116 to the face of a flange 120 having a tubular projection 122 extending into the sighting tube 24 or other suitable opening in the wall of the furnace, the flange 120 being affixed by bolts 126 to the furnace wall. A tubular extension 128 is threaded in the end of projection 122.

The bolts 116 extend through suitable elongated slots 130 (FIG. 6) in the flange 114. Each of the slots 130 is provided with a large diameter opening at one end to permit quick disconnect removal of the detector assembly from the furnace wall without removing completely bolts 116.

The right end of the casing 110 as viewed in FIG. 5 is enclosed by a cover 132. A suitable fitting 134 extends through the casing wall to receive an electrical conduit 136 having appropriate lead wires therein to establish the circuit illustrated in FIG. 2. Three mounting plates 138, 140 and 142 are supported within the casing 110 in parallel relationship to support the circuit components illustrated in FIG. 2. To complete the assembly a transparent window 144 of material such as quartz is mounted at the end of the opening through flange 114.

The detector tube 40 is mounted on plate 140 by means of a suitable socket with the plane established by its electrodes perpendicular to the common longitudinal axis of extension 128, window 144, and opening through flange 114. Thus, ultraviolet light passing into the open end of extension 128 will cause operation of tube 40 and associated circuitry as hereinbefore described. When the

detector **10** is mounted in the end of a pre-existing sight tube as illustrated in FIG. 5, ultraviolet light from the burner will pass through the sight tube to the window **114**.

FIGS. 7 and 8 illustrate a modification of the invention wherein the detector tube **40** is mounted in an extension remotely of the housing **110** and an air purge is provided to prevent collection of ash and other products of combustion on the surface of window **144**. More particularly, the flange **114** is provided with an elongated hollow tubular extension **150** of substantial length on the end of which is threaded a cap **152** having a flange **154** on which is mounted the window **144**. The extension **150** may be constructed of various lengths to accommodate different types of fuels and different flame conditions as will later be described. The detector tube **40** is mounted in the end of the extension **150** adjacent the window **144** and is connected by suitable leadwires as shown in FIG. 7 to the remainder of the circuitry within the housing **110**. An outer purge tube **156** of length complimented to that of extension **150** is provided with a flange **158** and encloses extension **150** in spaced relationship therewith to define an annular air space **160**. Suitable spacers such as rivets **162** may be fixed to extension **150** to fix the relative positions of the two tubular parts. Bolts **116** in this embodiment secure flange **114** to the flange **158**, the flange **114** being provided with slots as indicated in FIG. 6 to provide the quick disconnect feature similar to the embodiment of FIG. 6.

Air under pressure is supplied to the purge tube **156** by conduit **166** to establish a continuous flow of air through the space between extension **150** and tube **156** and out the open end of tube **156**. The end of purge tube **156** is preferably provided with an orifice plate **168** defining a central sharp crested discharge orifice which restricts and diverts the discharge of air to produce a unique cleaning and purging action with respect to window **144**. The air purge in combination with orifice **168** substantially eliminates the collection of ash and other products of combustion on window **144**.

In FIG. 8 we have illustrated a method of adjustably mounting the detector **10** of FIG. 7 on the windbox of a furnace so that the area of the flame viewed may be varied. More particularly there is shown a supporting flange **180** having a projecting sleeve **182** provided with a slot **184**. Flange **180** may be secured to windbox by bolts **186** with the sleeve **182** in axial alignment with the existing sighting tube or other suitable opening. The purge tube **156** is slideably mounted in sleeve **182** with conduit **166** received in slot **184**. Set screws **188** are threaded in sleeve **182** to engage the outer surface of purge tube **156** and thereby fix the position of the detector **10** and extension assembly. To adjust the position of the unit it is only necessary to loosen set screws **188** and slide the unit relative to sleeve **182**, the slot **184** permitting movement of conduit **166** and at the same time preventing rotation of the unit.

The adjustable mounting feature shown in FIG. 8 and/or the use of different lengths of extension **150** and purge tube **156** provides a unique result in calibrating the output or sensitivity of the detector **10** for the particular flame being monitored. More particularly, referring to FIG. 3 the size of area (*a*) of the flame and the intensity of the ultraviolet radiation per unit area varies with different fuels and is related to the hydrogen carbon ratio of the fuel. With a gas fired burner it has been found that the small area immediately adjacent the burner will produce the same amount of ultraviolet radiation as a much larger area in the case of a coal or oil flame.

Due to the concentration of ultraviolet radiation in the range of 2000–2800 angstroms in a small area (*a*) in the case of a gas burner, the detector **10** of FIG. 5 when merely mounted at the end of a pre-existing sighting tube as illustrated in FIGS. 1 and 3 will in most instances be subjected to sufficient ultraviolet radiation of a desired wavelength to respond to flame existence. The viewing area, however, is dependent on the dimensions of the sighting tube and in cases of abnormal windbox or sighting tube dimensions it may be necessary to utilize the detector and extension assembly of FIG. 7 to achieve the proper viewing area.

In the case of oil or coal-fired furnaces the ultraviolet radiation is less concentrated and the detector **10** must see a larger flame area to produce the desired output or response. Thus, the embodiment of FIG. 7 is preferably used with coal or oil-fired burners. The air purge feature of this embodiment is also preferably utilized with oil or coal-fired furnaces since these fuels tend to produce more ash and soot than natural gas.

FIG. 9 illustrates the application of two detectors **10** to the monitoring of both a main burner **16** and a pilot burner **192**. The other parts shown are generally similar to those illustrated in FIG. 1 and have been given like reference numerals. In this case two sighting tubes **24** are provided. One detector **10** of the type shown in FIG. 5 is arranged to view the main burner flame alone through the upper sighting tube while the second detector **10** is arranged to view both flames simultaneously through the lower sighting tube. With this arrangement one detector **10** will manifest the existence of the main burner flame while the other will manifest the existence of either flame.

Such an arrangement is desirable in an automatic startup system for a power plant. During startup one detector can be utilized to indicate the existence of a pilot burner flame to control initial supply of fuel to the main burner and the other detector arranged to detect the resulting ignition of the main burner and completion of the startup operation.

FIG. 10 illustrates the application of the embodiment shown in FIG. 7 to a coal fired furnace having a pulverized coal burner **194** connected by a conduit **196** to a pulverizer (not shown). Other parts shown are generally similar to those shown in FIG. 1 and have been given like reference numerals. Through the use of the extension assembly illustrated in FIG. 7 the detector tube **40** is positioned closer to the burner **194** to view a greater area of the burner flame. The use of extension tubes of different lengths and/or the adjustment means illustrated in FIG. 8 enables the detector tube **40** to be accurately positioned relative to the flame in accordance with the carbon-hydrogen ratio as previously described. The air purge feature illustrated in FIG. 7 insures clear "vision" on the part of the detector tube **40**.

It will now be apparent that the flame detector herein disclosed possesses many advantages over existing and prior art devices. The detector comprises only a simple reliable alternating current circuit which inherently provides the necessary quenching of the detector tube **40** without necessitating the provision of complicated quenching circuits and without restricting the remote positioning of the detector tube with respect to the electrical circuitry. The integrating and time delay circuits accurately limit response of the detector to the flame being monitored and operate to establish a sharp cutoff point in response at 2800 angstroms thus insuring discrimination between adjacent burners.

Another important advantage of the detector is the provision of the air purge which includes a unique air discharge orifice to insure a clear view of the monitored flame to the detector. A further advantage is the provision of an adjustable extension for mounting the detector tube **40** remotely of the detector housing to enable the viewing area of the detector to be calibrated for the hydrogen carbon ratio of the flame monitor. These features, along with other features hereinbefore described, result in an improved flame detector capable of accurately monitoring a combustion flame and at the same time capable of discriminating between other sources of radiation.

It will be apparent to those skilled in the art that many changes may be made in the construction and arrangement of parts without departing from the scope of the invention as defined in the appended claims.

It is claimed and desired to secure by Letters Patent of the United States:

1. A device for monitoring the flame in a combustion chamber produced by the burning of a fuel containing hydrogen and carbon comprising, a casing adapted to be mounted on the wall of the combustion chamber, a tubular extension extending from said casing into the combustion chamber, a radiation responsive detector mounted in said extension adjacent the end nearest the flame to receive radiation therefrom, said detector being sensitive only to invisible ultraviolet radiation produced by the burning of hydrogen in the fuel and operative to become electrically conductive in response to ultraviolet radiation, and an electric circuit positioned within said casing responsive to conduction or non-conduction of said detector to manifest the existence or non-existence of the flame.

2. A device for monitoring the flame in a combustion chamber produced by the burning of a fuel comprising, a casing adapted to be mounted on a wall of the combustion chamber, a tubular extension extending from said casing into the combustion chamber and having a transparent window closing and sealing the end thereof, a radiation responsive detector mounted in the end of said extension adjacent said window to receive radiation from the flame, said detector being sensitive to invisible ultraviolet radiation emitted by the combustion flame and operative to become electrically conductive in response to radiation in a predetermined wave-length range, an electric circuit positioned within said casing responsive to conduction or non-conduction of said detector to manifest the existence or non-existence of a flame within the combustion chamber, a tubular member inclosing said extension and having an open end terminating adjacent the end of said extension, and means for supplying air under pressure to said tubular member to produce an air flow through the space between said extension and said tubular member and out of the open end of said member to provide a continuous air purge of the end of said extension to prevent the collection of dust and products of combustion on said window.

3. A monitoring device as claimed in claim 2 wherein said tubular member is provided with an annular member at the end thereof to establish a square edged orifice of predetermined diameter to maintain a predetermined discharge velocity of the purging air at the end of said tubular member.

4. A monitoring device as claimed in claim 3 wherein said annular member comprises an annular orifice plate having a predetermined central bore pressed into said open end of said tubular member.

5. A device for monitoring the flame in a combustion chamber produced by the burning of a fuel comprising, a casing adapted to be mounted on the wall of the combustion chamber, a tubular extension of predetermined length extending from said casing into the combustion chamber, a radiation responsive detector tube mounted in said extension adjacent the end thereof for receiving radiation from a flame within the combustion chamber, said detector tube being sensitive to invisible ultraviolet radiation emitted by the combustion flame and operative to become electrically conductive in responsive to radiation of a predetermined intensity, the length of said tubular extension having a predetermined relationship to the hydrogen carbon ratio of the fuel to cause the area of the flame to which the detector tube is subjected to have a predetermined relationship with the hydrogen carbon ratio, and an electric circuit positioned within said casing responsive to conduction or non-conduction of the detector tube to manifest the existence or non-existence of a flame within the combustion chamber.

6. A detecting device for detecting ultraviolet radiation emitted by a radiation source comprising, a detector tube positioned to be subjected to radiation from the source, said tube comprising a glass envelope having a pair of identical electrodes mounted therein in electrically insulated relationship, a source of alternating potential coupled to said tube, a gas filling said envelope operative to become ionized under the influence of ultraviolet radiation and the alternating potential applied to said tube to establish an alternating current flow between said electrodes in response to ultraviolet radiation in a predetermined wavelength range, each of said electrodes alternately acting as anode and cathode to establish conduction during both half cycles of the alternating source potential, a rectifier circuit coupled to said tube for rectifying the A.C. signal conducted by said tube to produce a rectified output signal, an amplifier circuit for amplifying the output signal of said rectified circuit, a relay circuit coupled to the output of said amplifier for manifesting the condition of conductance or non-conductance of said tube, an enclosed casing containing said potential source, said rectifier circuit, said amplifier circuit, and said relay circuit, and a tubular extension for limiting exposure of said detector tube to a predetermined area of said radiation source, said tubular extension extending from said casing and terminating in a remotely positioned end, said detector tube being positioned within said extension end remotely from said casing.

7. A detecting device as claimed in claim 6 wherein said rectifier circuit comprises a bridge circuit having a pair of resistors forming one side of the bridge and a pair of diode rectifier elements forming the other side of the bridge.

8. A detecting device as claimed in claim 6 wherein a resistance is connected in series with said tube to limit current flow therethrough.

9. A detecting device for detecting ultraviolet radiation emitted by a radiation source comprising, a casing, a detector tube mounted adjacent an opening in said casing and subjected to radiation from the source, said tube comprising a glass envelope having a pair of identical electrodes mounted therein in electrically insulated relationship, a source of alternating potential coupled to said electrodes, a gas filling said envelope operative to become ionized under the influence of ultraviolet radiation and the alternating potential coupled to said tube to establish a flow of alternating current between said electrodes in response to ultraviolet radiation in a predetermined wavelength range, each of said electrodes alternately acting as anode and cathode to establish conduction during both half cycles of the alternating source potential, a rectifier circuit coupled to said tubes for rectifying the A.-C. signal conducted by said tube to produce a D.-C. output signal, a relay circuit coupled to the output of said rectifier circuit, and a manifesting device electrically associated with said relay means to be energized thereby.

10. In a combustion apparatus, the combination comprising means defining an enclosed combustion chamber, burner means within said combustion chamber for producing controlled combustion of a fuel containing carbon and hydrogen, a casing adapted to be mounted on a wall of said combustion chamber, an extension tube extending from said casing, a radiation sensitive detector positioned within said extension tube remotely from said casing to view the combustion process within said combustion chamber, said detector comprising a gas-filled electron discharge tube having a pair of spaced electrodes, said detector tube being sensitive to invisible ultraviolet radiation produced by the burning of hydrogen in the fuel and operative to become electrically conductive in response to radiation in a predetermined wavelength, and an A.-C. energized electric circuit mounted within said casing to cause conduction of an alternating current through said tube when a flame exists within said combustion chamber.

11. In a combustion apparatus as claimed in claim 10

wherein said electrodes are of equal size and of identical characteristics to each alternately act as anode and cathode during alternate half cycles of the A.-C. energizing voltage.

12. In a combustion apparatus as claimed in claim 11 wherein a rectifier circuit is coupled to said tube to establish a D.-C. output signal and a direct current relay is coupled to said rectifier circuit to be energized by said D.-C. output signal.

13. A detecting device for detecting ultraviolet radiation emitted by a radiation source comprising, a casing, a tubular extension extending from said casing and terminating in a remotely positioned end, a detector tube positioned within said extension end remotely from said casing and subjected to radiation from the source, said tubular extension limiting the exposure of said detector tube to a predetermined area of said radiation source, said tube comprising a glass envelope having a pair of identical electrodes mounted therein in electrically insulated relationship, a source of alternating potential coupled to said electrodes, said electrodes alternately acting as anode and cathode to conduct an alternating current during existence of ultraviolet radiation, a gas filling said envelope operative to become ionized under the influence of ultraviolet radiation when either a predetermined positive or negative potential exists across electrodes during a cycle of the A.-C. source voltage and operative to become deionized upon decrease of the positive or negative potential to a predetermined minimum value during the positive and negative half cycles respectively of the A.-C. source potential to thereby effect quenching of said detector tube during each half cycle of the alternating source potential by the polarity reversing characteristic of the source, and means responsive to the

alternating current conducted by said tube to manifest the existence of ultraviolet radiation.

14. A detecting device as claimed in claim 13 wherein said alternating current responsive means comprises a rectifier for rectifying said alternating current signal to produce a full wave rectified output signal, an amplifier for amplifying said output signal, and relay means responsive to the output of said amplifier for manifesting the existence or non-existence of ultraviolet radiation.

15. A detecting device as claimed in claim 14 wherein integrating and time delay means are provided to limit response of said amplifier and relay means to a predetermined half cycle conduction rate of said detector tube and to delay response of said amplifier and relay means for a predetermined time after said conduction rate has commenced or ceased.

16. A detecting device as claimed in claim 15 wherein said integrating and time delay means comprises a resistor and a capacitor connected in the input circuit of said amplifier.

References Cited by the Examiner

UNITED STATES PATENTS

2,749,447	6/56	Smith.	
2,840,146	6/58	Ray	250—209 X
2,885,555	5/59	Blumer	250—83.3 X
2,944,152	7/60	Johnson et al.	250—83.6
2,956,168	10/60	Pinckaers	250—83.6
3,041,458	6/62	Roxberry.	
3,103,589	9/63	Howling	250—83.3 X

RALPH G. NILSON, *Primary Examiner.*

ARCHIE R. BORCHELT, *Examiner.*