United States Patent [19]

Parker, Sr.

[11] **3,778,968**

[45] **Dec. 18, 1973**

[54] **METHOD AND APPARATUS FOR CONTROLLING AIR POLLUTION CAUSED BY VOLATILE EMISSIONS FROM STORAGE TANKS AND THE LIKE**

[75] Inventor: **George Parker, Sr.**, Corpus Christi, Tex.

[73] Assignees: **J. B. Trimble; Dwain Smith,** both of Houston, Tex.; part interest to each

[22] Filed: **Aug. 10, 1972**

[21] Appl. No.: **279,499**

[52] **U.S. Cl.** **55/32,** 55/88

[51] **Int. Cl.** **B01d 53/14**

[58] **Field of Search**...55/30-32, 88; 62/12, 18, 37, 54

[56] **References Cited**

UNITED STATES PATENTS

3,255,573	6/1966	Cox	55/32
3,403,522	10/1968	Henry	55/31
3,589,104	6/1971	Panzareua	55/32
2,947,379	8/1960	Aubrey	55/88
3,648,436	3/1972	Schoneward et al.	55/88

Primary Examiner—Charles N. Hart

Attorney—Pravel, Wilson & Matthews

[57] **ABSTRACT**

Method and apparatus for controlling air pollution caused by volatile emissions from petroleum storage tanks and the like, wherein such volatile emissions or vapors are passed through a brine or glycol solution having a controlled temperature range for separating petroleum hydrocarbons, water and air and for collecting the hydrocarbons so that they do not escape to the environment.

8 Claims, 3 Drawing Figures

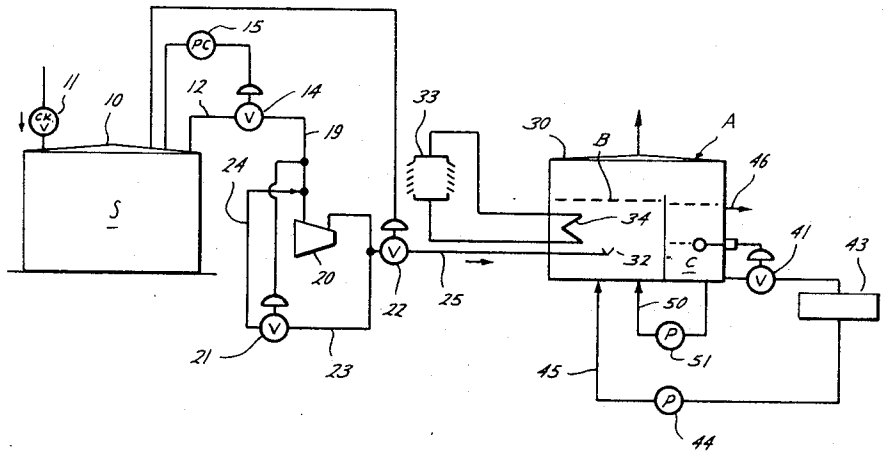

Fig. 1

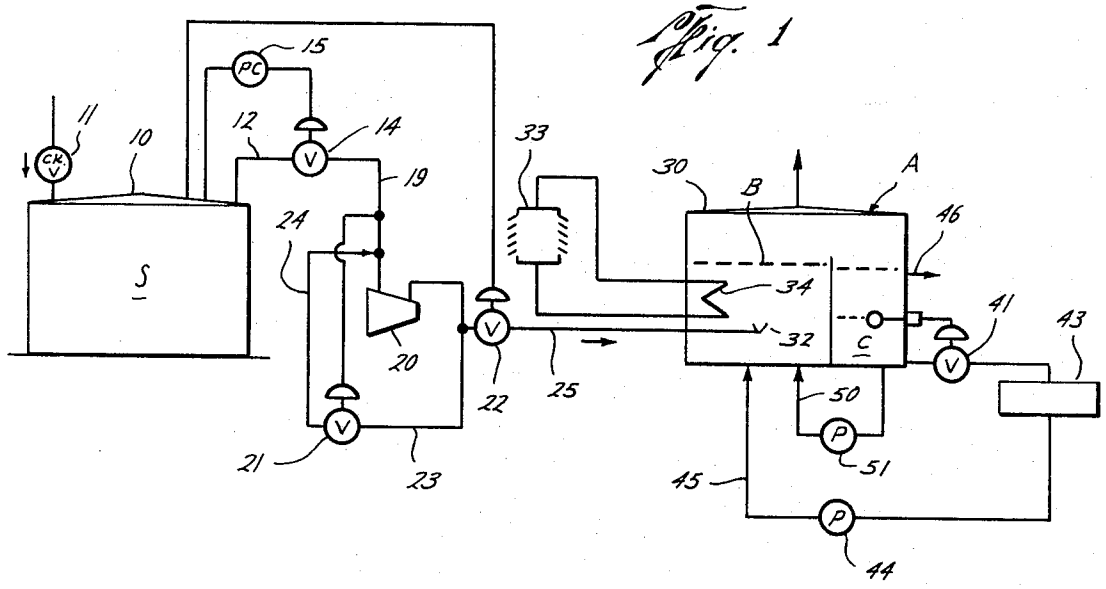
15
PC
11
CK. V
10
12
14
V
19
24
S
20
21
23
22
25
33
30
B
A
46
34
32
C
41
43
50
P
51
45
44

Fig. 2

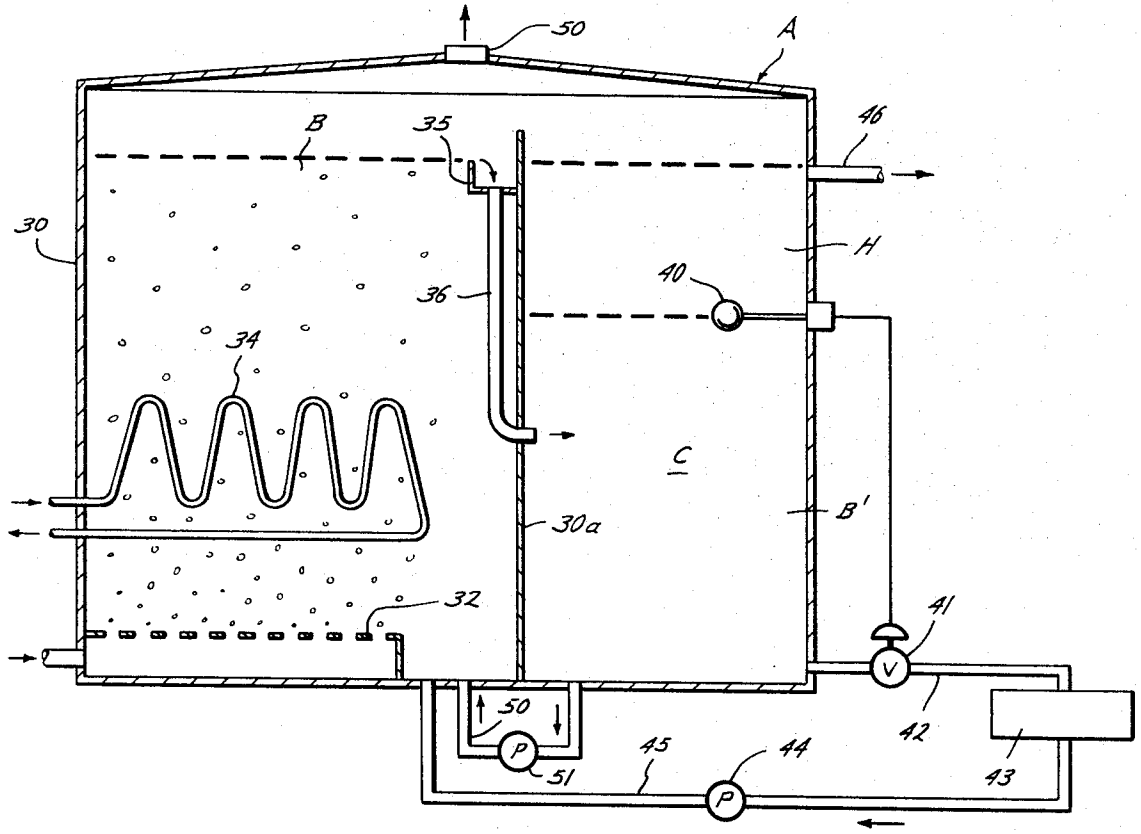
50
A
B
35
46
30
H
40
36
34
C
30a
B'
32
41
V
42
43
50
P
51
45
44

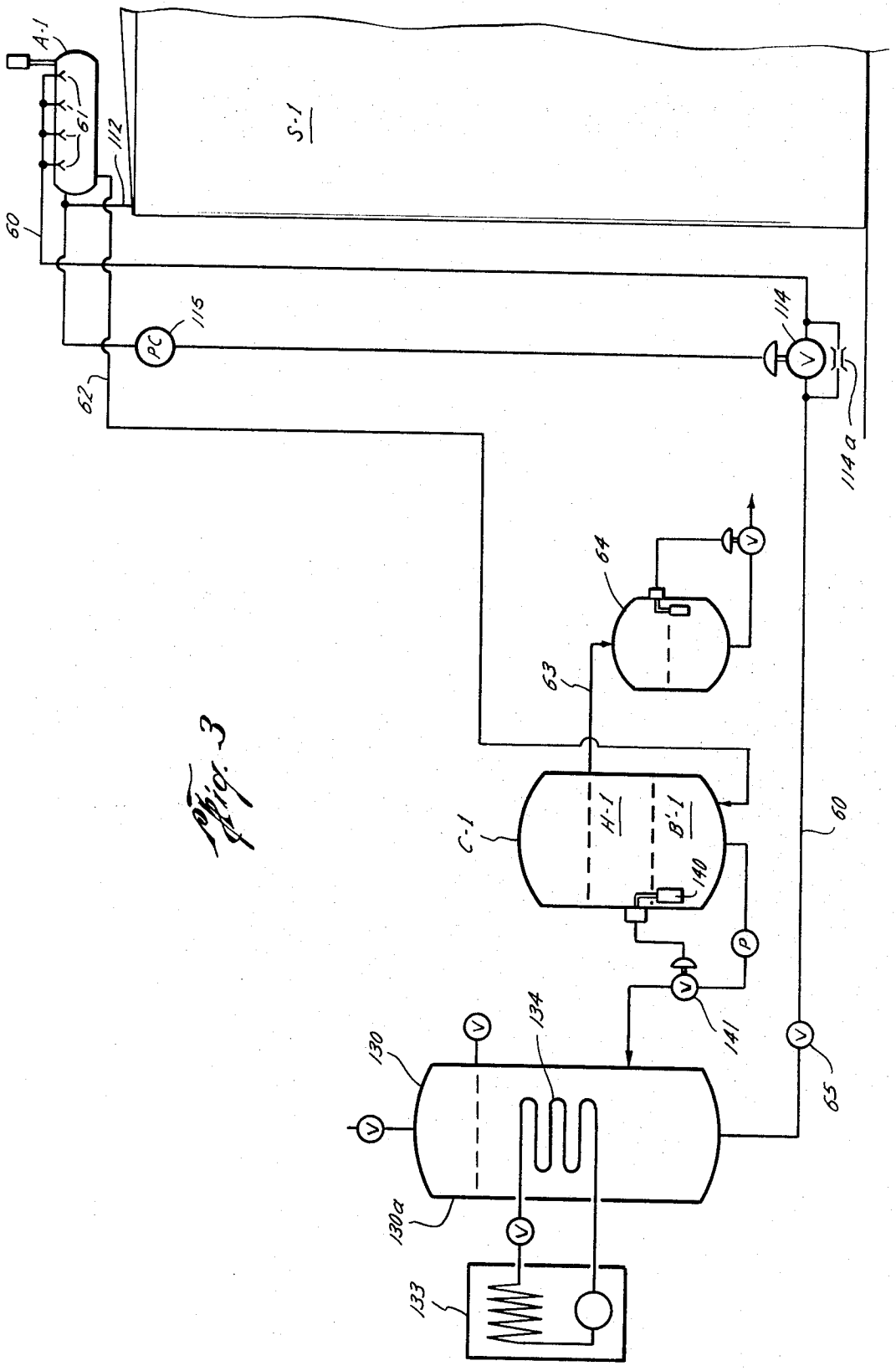
A-1
61
112
S-1
60
PC
115
62
114
114a
64
63
C-1
H-1
B-1
140
P
141
60
65
134
130
130a
133

Fig. 3

METHOD AND APPARATUS FOR CONTROLLING AIR POLLUTION CAUSED BY VOLATILE EMISSIONS FROM STORAGE TANKS AND THE LIKE

BACKGROUND OF THE INVENTION

The field of this invention is methods and apparatus for controlling air pollution due to petroleum vapor emissions from storage tanks and the like.

In the storage of petroleum in large storage tanks, vapors are expelled due to changing temperatures of the atmosphere surrounding the storage tanks and the vapors are also displaced when the tank is filled. In the past, it has been customary to provide a floating roof in each storage tank so that the amount of vapors were reduced. Such floating roof construction has been very expensive, and with older tanks, such construction has been generally impossible since they are usually out of round and/or they have steel framing which interferes with an adequate seal between the floating roof and the side wall of the tank.

In other instances, vapor recovery has been effected from storage tanks by passing the hydrocarbon vapors through a carbon bed, then regenerating the bed and cooling it down for re-use. Such vapor recovery system is also very expensive and as a consequence is not used extensively. Refrigeration heat exchange has also been employed for vapor recovery, but it suffers from the disadvantage that the water which is usually present with the hydrocarbon vapors freezes in the heat exchanger tubes, causing heat transfer and flow problems.

Examples of prior art known to applicant are U. S. Pat. Nos. 2,077,019; 2,753,691; 2,885,109; 2,889,013; 2,929,463; 3,124,937; 3,581,782; 3,648,436; and 3,661,366, and British Pat. No. 893,642, most of which have only limited relevancy, if any. The Schlict U.S. Pat. No. 2,077,019 discloses the use of a brine for controlling the back pressure in a petroleum storage tank, but there is no control of the temperature of the brine, and further, such system is dangerous in that if water is present in the vapors passing through the pipe in the brine, and the brine is at or below freezing, ice may form in the pipe and plug off the flow, thus exposing the system to an explosion as the pressures develop.

SUMMARY OF THE INVENTION

The present invention relates to methods and apparatus for controlling air pollution caused by volatile emissions from petroleum storage tanks and the like. The present system overcomes the problems of the prior art and is far less costly. The system of this invention provides for the flow of petroleum vapors under controlled pressure conditions to a brine or glycol solution where the vapors are passed directly into contact with such solution, the temperature range of which is controlled so as to condense the hydrocarbon vapors and allow the water therewith to go into solution while the air bubbles on through the solution for discharge to atmosphere. Thus, the hydrocarbon vapors are not only controlled to prevent air pollution if they escaped to the atmosphere, but they are also condensed and recovered with a reduced cost compared to the known prior art systems.

BRIEF DESCRIPTION OF THE DRAWINGS

FIG. 1 is a schematic illustration of the apparatus of this invention used for carrying out the method of this invention;

FIG. 2 is an enlarged sectional view of a portion of the apparatus of FIG. 1 and further illustrating the method of this invention; and

FIG. 3 is a modified form of the apparatus of this invention.

DESCRIPTION OF THE PREFERRED EMBODIMENT

Various petroleum products such as gasoline and other petroleum products are conventionally stored in extremely large storage tanks which may be several hundred feet in diameter and of a height equivalent to a multiple story building. Because of the size of such a storage tank, one of which is indicated with the letter S in FIG. 1, variations in the ambient temperature to which such tanks are exposed create pressure variations resulting in uncontrolled vapor emissions. The apparatus and method of this invention provide for almost complete recovery of the hydrocarbons in the petroleum vapors so as to control air pollution which might otherwise result if such volatile petroleum emissions escape from the storage tanks into the atmosphere. As will be more fully explained, the upper portion of each storage tank S, or a plurality of such tanks S, are connected through suitable means, which will be described, to a treating assembly A (FIG. 1) in which the petroleum vapors together with any water and air therewith, are passed in direct contact with a brine or glycol solution which is within a controlled temperature range. The hydrocarbons in the petroleum vapors are condensed in such apparatus or assembly A, the water goes into the solution with the brine solution and dilutes it to some extent and, any air which was with the petroleum vapors passes out into the atmosphere in substantially uncontaminated form. The hydrocarbons which are condensed may also be recovered for their value.

Considering the invention more in detail, and particularly the form illustrated in FIGS. 1 and 2, the storage tank or tanks S having the petroleum products therein is each preferably formed with a fixed roof or top 10 having a check valve 11 for permitting the flow of air into the tank S but preventing the escape of vapors or gases from the tank S.

The upper portion of the tank S is connected by a pipe 12 through which petroleum vapors which are formed in the upper end of the storage tank S may flow under certain conditions as hereinafter described. To prevent the roof or top 10 of each storage tank S from being subjected to excessive forces which might cause distortion, bending or even collapse thereof, the pressure within the upper part of the storage tank S is desirably maintained at a pressure close to atmospheric pressure or other pressure outside of the tank S. The provision of the check valve 11 provides for the entry of air to equalize the pressure internally of the tank S with the atmospheric pressure in the event there is a reduction of pressure in the upper portion of the storage tank S. If the pressure within the storage tank S exceeds atmospheric pressure, then a valve 14 connected to the line 12 is operated to permit a flow of the petroleum vapors, or some of them, from the tank S until the pressure in the upper end of the storage tank S has been returned to atmospheric pressure or within a pressure range slightly above atmospheric pressure. By way of

example, the valve 14 may be operated by a conventional pressure control device 15 which is connected between the valve 14 and the upper end of the storage tank S so that the valve 14 is opened when the pressure in the upper end of the storage tank S exceeds one-fourth of an ounce above atmospheric pressure, and it remains operable so as to keep the valve 14 open until the pressure drops below such pressure. Thus the apparatus of this invention insures that the pressure of the vapors in the upper end of the storage tank S to which the apparatus is connected never exceeds the pressure which is set by the pressure control device 15 and that is set so as to prevent any damage to the storage tank itself by reason of pressure changes therein.

A blower 20 is connected to the line 12 through the valve 14 with a line 19, such blower normally being of a type developing a fairly low pressure of 10 pounds per square inch or less, but not actually serving as a compressor because of the dangers involved in the use of a compressor with petroleum vapors. The blower 20 is preferably operating at all times and the flow therefrom is controlled by a valve 21 and also preferably by a valve 22, the location and functioning of which will be described.

Thus, when the valve 14 is closed, the blower 20 circulates vapors or air through line 23, open valve 21, line 24 and back to line 19 to re-entry into the blower 20. The valve 22 is closed under such circumstances to prevent flow to the assembly A. The valve 22 is located in line 25 which also leads from the blower 20 so that when the valve 14 is opened by the pressure control device 15, the pressure sensed in the tank S operates to open the valve 22 and the pressure sensed in line 19 operates to close the valve 21 so that the blower 20 then causes the petroleum vapors to flow through the line 25 to the apparatus or assembly A.

As illustrated in particular in FIGS. 1 and 2, the assembly of apparatus A includes a tank or container 30 which has a divider plate 30*a* therein for dividing the tank into two separate compartments, one of which has a brine or glycol solution B therein. Such solution B is preferably a glycol such as propylene glycol or ethylene glycol. An inorganic brine such as calcium cloride may also be utilized. The concentration of the solution depends upon the particular concentration and type of the hydrocarbons in the petroleum vapors which are passed through the solution, examples of which will be provided hereinafter.

The petroleum vapors which include any air and water therewith, are introduced into the solution B through the inlet pipe 25 at the lower end or bottom portion of the compartment of the tank 30 in which the solution B is disposed. A conventional sieve tray 32 or similar means is located near the bottom of the solution B, and the petroleum vapors are sparged into the solution B through the sieve tray 32 so that the vapors bubble up through the cold solution B. The solution itself is kept at a controlled temperature which is regulated so that the temperature is low enough for maximum recovery of the hydrocarbons in the petroleum vapors. The temperature of the solution B is thus variable but broadly it would be within a range of about −20° F to about 40° F. As illustrated in FIGS. 1 and 2, such temperature control is preferably provided by a refrigeration unit 33 of conventional construction which provides refrigerant in a coil 34 disposed in the solution B. The upper level of the solution B is controlled by an overflow wier 35 which has a flow tube 36 therewith extending through the divider plate 30*a* so that the overflow of the solution B flows into a decanter section C of the tank 30 which is separate from the solution B. The decanter section C provides a quiet settling area to effect a liquid separation by gravity of the condensed hydrocarbons in an upper layer H floating on top of the separated solution B' which is a weak solution compared to the solution B because of the water dissolved therewith. A conventional float 40 operably by the solution B' only may be utilized in the decanter section B for maintaining the level of the weak solution B' at a predetermined height. Thus, such float 40 may be connected to a control valve 41 in a discharge line 42 leading to a solution regeneration unit 43 where the solution B' is reconcentrated in the known manner so that it is at the same strength as the solution B. A pump 44 is utilized for pumping the regenerated solution from the regenerator 43 back through line 45 into the solution B. A cascade pump 51 maintains a continuous flow from C to B through line 50, such flow being controlled so as to allow adequate decanting time in decanter section C.

The condensed hydrocarbons H are decanted from the decanter section C through an overflow pipe 46 which leads to a storage reservoir (not shown). A vent opening or stack 50 is provided in the upper end of the tank 30 so that the air which has bubbled through the brine solution B may escape to the atmosphere. Since the majority of the hydrocarbons are condensed in the solution B, the gas thus escaping through the opening 50 is essentially all air, with a minimum of hydrocarbon vapors and thus air pollution is minimized or prevented.

In carrying out the method of this invention, using the apparatus of FIGS. 1 and 2, the petroleum vapors are passed from the stroage tank S, or a plurality of such tanks S, to the apparatus A. Thus, the petroleum vapors which include the hydrocarbons such as propane, butane, pentane and heavier, together with any water or air are transmitted and are caused to flow through the brine solution B. The contact of such petroleum vapors, including the water and air, is thus directly with the solution B. This is important because if water is present with the petroleum vpaors, which is almost always the case, the water will freeze, as is the case in prior art systems; however, in this invention it will not freeze since it goes into solution with the solution B; hence there is no interference with the condensation of the hydrocarbons, and it does not block off flow of the petroleum vapors or the air therewith with the result so that in the absence of freezing there is no danger of explosion of the apparatus or other adverse effects.

For normal hydrocarbon recovery, the lowest practical temperature is about −20° F for such solution B, although normally the operating temperature would be somewhat higher than that. By way of example, with 80 percent propylene glycol (by volume) as the solution, and with the other 20 percent (by volume) being water, the temperature of the solution B would be maintained between about 10° F and about 15° F to recover about 95 percent of propane and heavier hydrocarbons which would be normally present in a gasoline storage tank having a gasoline blend stored therein. When the solution B is an 80 percent ethlene glycol solution, with the other 20 percent being water, butane and heavier hy-

drocarbons may be condensed and recovered up to about 90 percent or better by maintaining the solution B at a temperature as high as 40° F, but preferably in the neighborhood of 30° F. Thus, it can be seen that the percentage concentration of the glycol to water may be varied depending upon the temperature level desired and also the particular hydrocarbons which are being condensed and recovered. Such factors may be readily determined by those skilled in the art, using the foregoing examples for guidance.

Because water is brought into the solution B with the petroleum vapors, the solution B is constantly being diluted and therefore when the solution B' has been separated from the condensed hydrocarbons H as seen in FIG. 2 the solution B' is regenerated by heating same to boil off some of the water or by otherwise removing some of the water in any manner known to those skilled in the art. Make-up solution is also added as desired to compensate for any of the solution which is lost in the process by vaporization or otherwise.

A modified form of the apparatus and the method of this invention is illustrated in FIG. 3, which is adapted to be used for individual tank control. Thus, although the apparatus of FIGS. 1 and 2 may be connected to multiple tanks S, the form of the invention shown in FIG. 3 is constructed for connection to only a single tank S-1, a portion of which is illustrated in FIG. 3. The contactor apparatus A-1 of FIG. 3 is connected through a control line 112 to the upper end of the storage tank S-1 so that any petroleum vapors collected therein may flow into the apparatus A-1. Such flow may be specifically regulated with a valve 14 and a pressure control device 15 such as illustrated in FIG. 1, or the vapors may pass through line 112 as the pressure develops in the upper end of the storage tank S-1. When the pressure reaches a predetermined amount in the line 112, a pressure control device 115 is actuated to operate a valve 114 so that thereafter the brine from the tank 130 flows through the valve 114 and line 60 to spray heads 61 in the apparatus A-1. Thus, the solution is sprayed into the unit A-1 so as to directly contact the petroleum vapors together with any water or air therewith. The water and the hydrocarbons are thus condensed by the spray of the solution from the spray nozzles 61 and they flow through line 62 to a separator C-1. The separation in the separator C-1 is preferably by decanting in such manner as heretofore described in connection with FIGS. 1 and 2. Thus, the hydrocarbons H-1 are at the upper level and the weak solution B'-1 is at the lower level. The level is preferably maintained by a suitable float control 140 corresponding to the float control 40 of FIG. 2 which operates a control valve 141 returning the brine solution to the brine tank 130. The condensed hydrocarbons H-1 flow through line 63 to a storage tank 64 having any suitable controls therewith. The solution is refrigerated using a conventional refrigeration apparatus 133 and a refrigeration coil 134 in the solution so as to maintain the temperatures of the solution within the limits heretofore disclosed in FIGS. 1 and 2.

An excess flow valve 65 may be provded in line 60 from the tank 130 to control the volume flow of the brine solution to the contactor apparatus A-1 so as to prevent overflow at the contactor A-1. Also, a small bypass line 114a is provided around the valve 114 so that there is always a small amount of flow to the contactor A-1 to maintain a low temperature therein at all times.

It is to be noted that the alternate form of the invention shown in FIG. 3 does not require a blower such as the blower 20 to bring the vapors to the apparatus since the tank 130 is pressurized with nitrogen or other gas in the upper portion 130a above the liquid level of the solution so as to provide sufficient pressure to move the solution to the contactor A-1 without pumping.

Although the invention has been specifically described for recovering vapors from petroleum storage tanks, it should be understood that this invention is not limited to such source for the petroleum vapors, since the petroleum vapors may come from any source.

The foregoing disclosure and description of the invention are illustrative and explanatory thereof, and various changes in the size, shape, and materials as well as in the details of the illustrated construction may be made without departing from the spirit of the invention.

I claim:

1. A method of controlling volatile petroleum emissions from a storage tank, comprising the steps of:
transporting petroleum vapors together with any water and air therewith by a low pressure blower to a liquid bath having therein a solution selected from the group consisting of brine and glycols;
regulating the pressure of the petroleum vapors in the storage tank by admitting air into the tank when the pressure drops below a predetermined amount related to atmospheric pressure, and by effecting said transporting of the petroleum vapors to the solution when the pressure in the tank exceeds a predetermined amount related to atmospheric pressure;
bubbling said petroleum vapors together with any water and air therewith upwardly through and in direct contact with said solution in said bath;
controlling the temperature of said solution so that it is low enough to condense a substantial portion of the hydrocarbons in said vapors;
causing any water with said petroleum vapors to go into solution with said solution;
separating any air from said petroleum vapors by the discharge of the air from the upper surface of the liquid bath; and
separating said condensed hydrocarbons from said solution.

2. The method set forth in claim 1, wherein:
the temperature of the solution is controlled by refrigerating same.

3. The method set forth in claim 1, wherein:
the temperature of the solution is maintained within a range from about minus 20° F to about 40° F.

4. The method set forth in claim 1, wherein:
said condensed hydrocarbons are separated from the solution by decanting said condensed hydrocarbons.

5. The method set forth in claim 1, including:
regenerating the brine solution after it has been diluted with the water introduced with the petroleum vapors so as to maintain the strength of the solution at an adequate level for the condensation and recovery of the hydrocarbons therein.

6. The method set forth in claim 1, wherein:
said solution is a glycol.

7. Apparatus for controlling volatile petroleum emissions from a storage tank, comprising:
a storage tank;

a low pressure blower means for transporting petroleum vapors together with any water and air therewith from the storage tank to a liquid bath having therein a solution selected from the group consisting of brine and glycols;

means for regulating the pressure of the petroleum vapors in the storage tank by admitting air into the tank when the pressure drops below a predetermined amount related to atmospheric pressure;

means for effecting transporting of the petroleum vapors to the solution when the pressure in the tank exceeds a predetermined amount related to atmospheric pressure;

means for supplying the solution;

means for bubbling said petroleum vapors together with any water and air therewith upwardly through and in direct contact with said solution in said bath for condensing a substantial portion of the hydrocarbons in the petroleum vapors, allowing the water therewith to go into solution with the brine, and separating the air for discharge therefrom;

means for separating said condensed hydrocarbons from the brine solution.

8. The apparatus set forth in claim **7**, wherein said means for separating said condensed hydrocarbons includes:

means for overflowing the solution and condensed hydrocarbons together into a settling tank; and

means for thereafter decanting the hydrocarbons from the solution in the settling tank.

* * * * *

UNITED STATES PATENT OFFICE
CERTIFICATE OF CORRECTION

Patent No. 3,778,968 Dated December 18, 1973

Inventor(s) George Parker, Sr.

It is certified that error appears in the above-identified patent and that said Letters Patent are hereby corrected as shown below:

On the cover page, after the name of the assignees, delete "Houston" and substitute therefor -- Corpus Christi --.

Signed and sealed this 3rd day of December 1974.

(SEAL)
Attest:

McCOY M. GIBSON JR.
Attesting Officer

C. MARSHALL DANN
Commissioner of Patents

FORM PO-1050 (10-69)

USCOMM-DC 60376-P69
☆ U.S. GOVERNMENT PRINTING OFFICE : 1969 O—366-334.