June 14, 1938. W. V. MOORE 2,120,763

VALVE

Filed Aug. 30, 1937

Fig. 1.

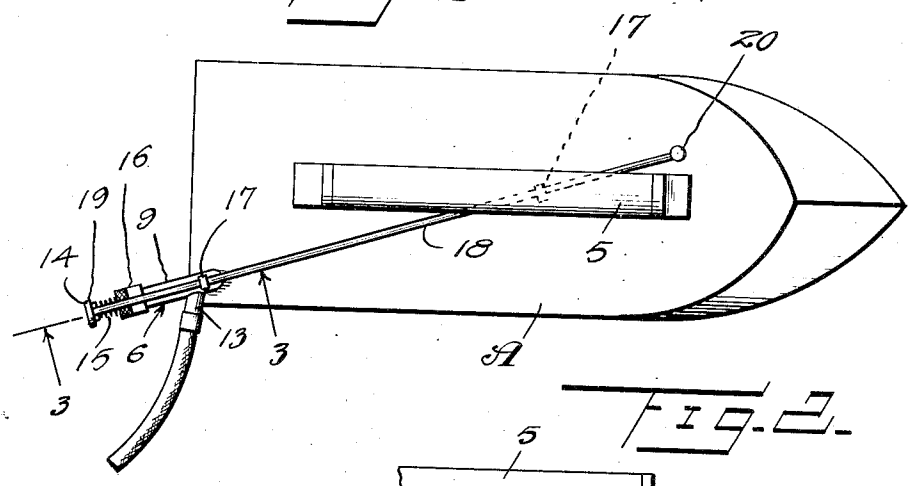

Fig. 2.

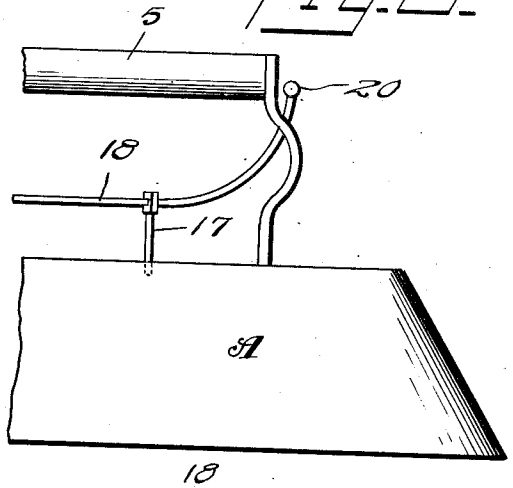

Fig. 4.

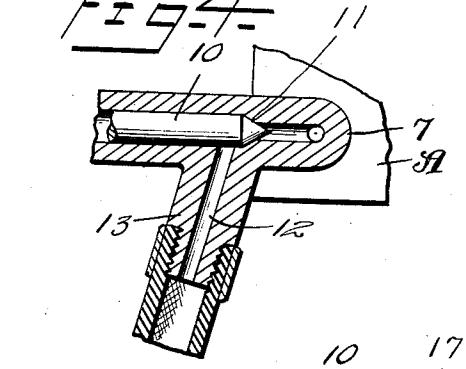

Fig. 3.

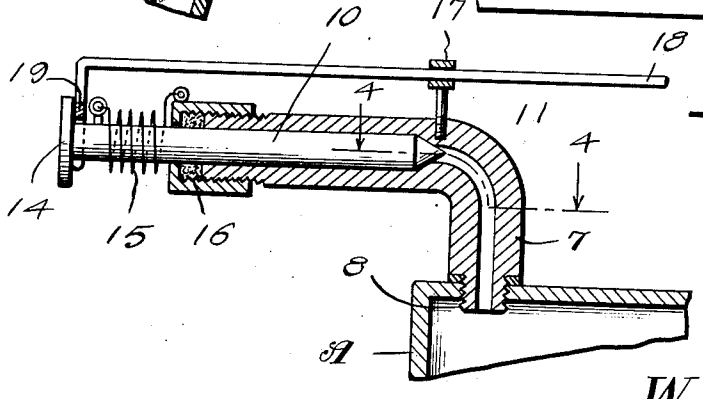

W. V. Moore

INVENTOR

BY Victor J. Evans & Co.

ATTORNEYS

Patented June 14, 1938 2,120,763

UNITED STATES PATENT OFFICE

2,120,763

VALVE

William V. Moore, Grand Rapids, Mich.

Application August 30, 1937, Serial No. 161,700

1 Claim. (Cl. 251—137)

The invention relates to a valve and more especially to a steam valve fitting for pressing implements.

The primary object of the invention is the provision of a fitting of this character, wherein a valve controls admission of steam to a pressing iron, the valve being controlled by hand and is normally closed.

Another object of the invention is the provision of a fitting of this character, which is simple in construction, thoroughly reliable and efficient in operation, readily and easily controlled, conveniently located upon the iron for hand manipulation, strong, durable, and inexpensive to manufacture and install.

With these and other objects in view, the invention consists in the features of construction, combination and arrangement of parts as will be hereinafter more fully described, illustrated in the accompanying drawing, which discloses the preferred embodiment of the invention and pointed out in the claim hereunto appended.

In the accompanying drawing:

Figure 1 is a top plan view of an iron showing the fitting constituting the present invention applied.

Figure 2 is a fragmentary side elevation.

Figure 3 is a fragmentary vertical longitudinal sectional view.

Figure 4 is a sectional view on the line 4—4 of Figure 3 looking in the direction of the arrows.

Similar reference characters indicate corresponding parts throughout the several views in the drawing.

Referring to the drawing in detail, A designates generally a movable machine iron having extended perpendicularly from its top a handle 5 of conventional kind so that such iron can be manually operated for pressing purposes and such iron is merely shown to illustrate the application of the invention in the nature of a valve fitting in that the latter is applicable to other implements for controlling steam admission thereto, the fitting being hereinafter fully described.

The fitting constituting the present invention comprises a substantially Y-shaped body 6 having a goose neck end 7 formed with a threaded nipple 8 tapped into the iron A through the top thereof and in this manner the fitting is joined with the said iron. The long arm 9 of the body 6 has therein a needle valve 10 for seating at 11 to shut off the inlet passage 12 for steam to be admitted into the iron, this passage 12 being formed in the shorter arm 13 which is at an angle to the arm 9 and extends laterally to one side, preferably the right hand side, of the iron.

The needle valve at its outer end carries a push button head 14 while surrounding this valve is a coiled retractile spring 15, one end being fixed to the valve and the other end to a cap-like packing gland 16, the purpose of the spring 15 being to urge the valve 10 seated at 11 and thus shutting off steam supply to the iron.

Fitted at the top of the iron and uppermost on the arm 6 of the fitting are guides 17 in which is slidably held a control rod 18 having a down-turned fork end 19 straddling the valve 10 and operating against the push button head 14 while the other end of the rod 18 is in the form of an upstanding trigger 20 arranged adjacent to the fore part of the handle 5 and is manually actuated, being convenient for finger manipulation when an operator is gripping the handle 5 by the hand.

On pushing the rod 18 at the trigger end 20, the valve 10 is unseated allowing steam supply to the iron.

What is claimed is:

A valve fitting for a steam receiving pressing implement having a chambered body with a flat top and a handle rising from said top, comprising a multiple branch pipe, one branch being fitted to the body at its top for communication with the chamber and the remaining branches disposed above and substantially parallel with the said top, the said remaining branches being angled to each other for lateral projection of one with respect to the body and the diagonal disposition of the other to the top of said body, a slide valve within the diagonally disposed branch and normally closing the laterally directed branch, a steam supply pipe connected with the laterally directed branch, a headed stem forming a part of said valve, a guide eye rising from the first-mentioned pipe, an actuating rod trained through said guide eye for disposition diagonally of the handle with the major portion of said rod underlying the handle, a down-turned yoke formed on the rod next to the stem and abutting the head thereof at the innermost side of the same, a forwardly and upwardly curved grip formed from the rod and disposed adjacent to and forwardly of the foremost end of the handle, and a spring connected with the first-mentioned pipe and to the said stem for urging the valve to closing position.

WILLIAM V. MOORE.