US 20050000992A1

(19) **United States**

(12) **Patent Application Publication** (10) **Pub. No.: US 2005/0000992 A1**

Mead (43) **Pub. Date: Jan. 6, 2005**

(54) **DIAPER BAG AND CARRYING DEVICE**

(75) Inventor: **Teresa Mead**, Westminster, CO (US)

Correspondence Address:
TOWNSEND AND TOWNSEND AND CREW, LLP
TWO EMBARCADERO CENTER
EIGHTH FLOOR
SAN FRANCISCO, CA 94111-3834 (US)

(73) Assignee: **The Boppy Company**, Golden, CO (US)

(21) Appl. No.: **10/612,265**

(22) Filed: **Jul. 1, 2003**

Publication Classification

(51) **Int. Cl.**[7] **A45F 3/02**

(52) **U.S. Cl.** **224/610**; 224/617

(57) **ABSTRACT**

In one embodiment, a brad for carrying items comprises a bag body having a top end, a bottom end, a front side and a back side. The bag has a rain compartment, and the top end defines an opening into the main compartment. The top end of the bag body is curved to facilitate the holding of a curved pillow. A carrying strap is coupled to the bag body.

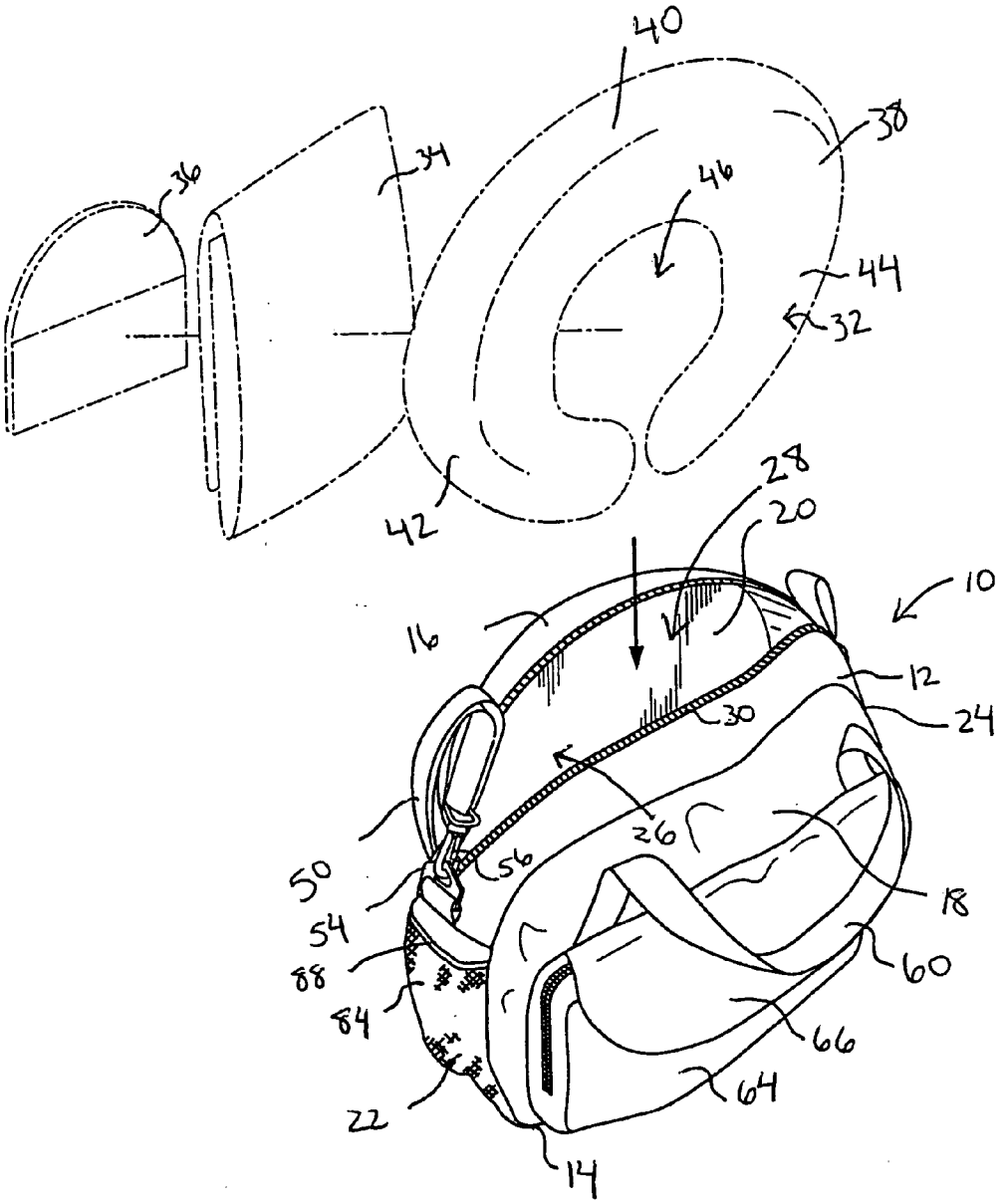

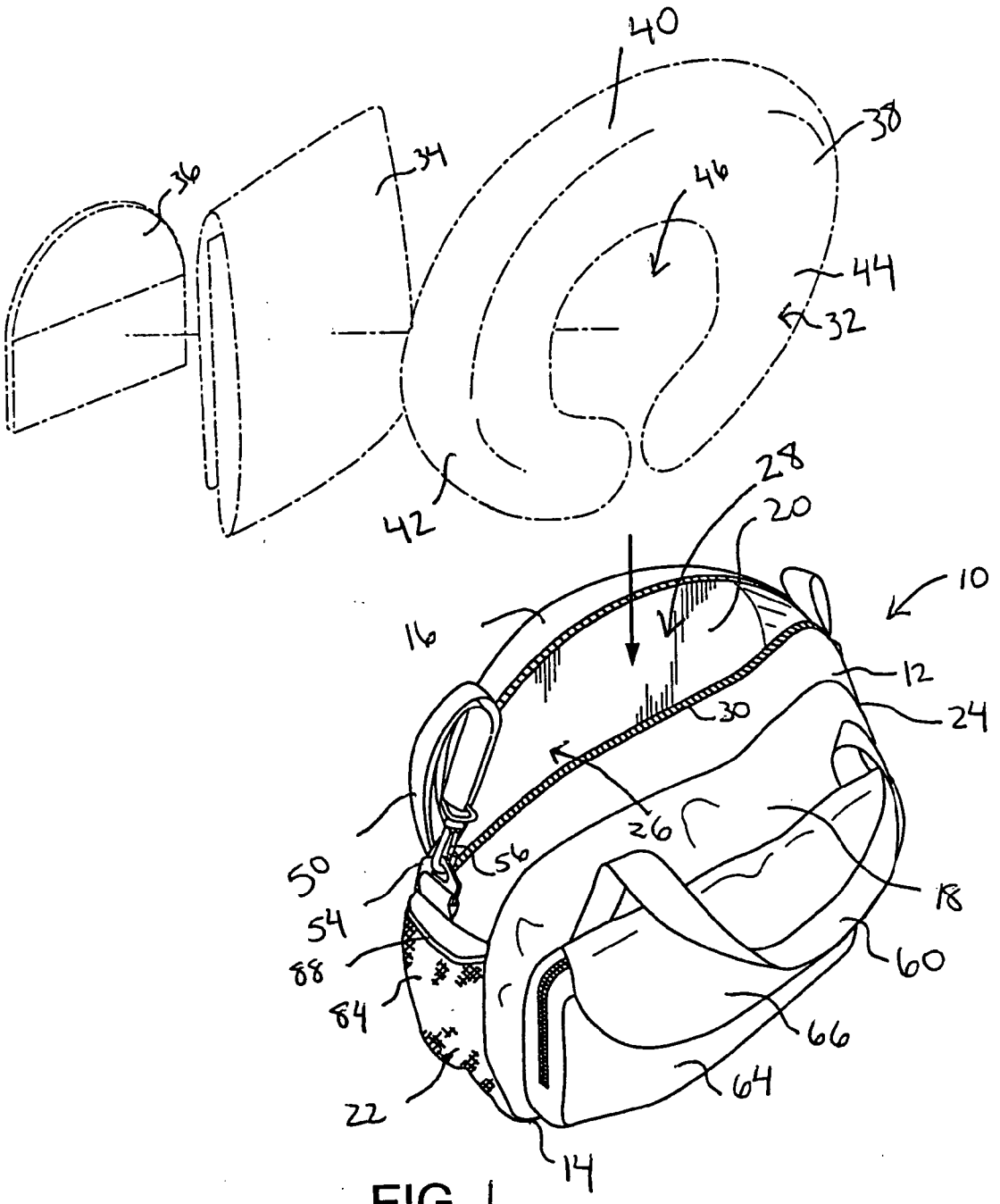
40
38
36
34
46
44
32
42
28
20
10
16
12
30
24
26
50
56
18
54
60
88
84
66
64
22
14

FIG. 1

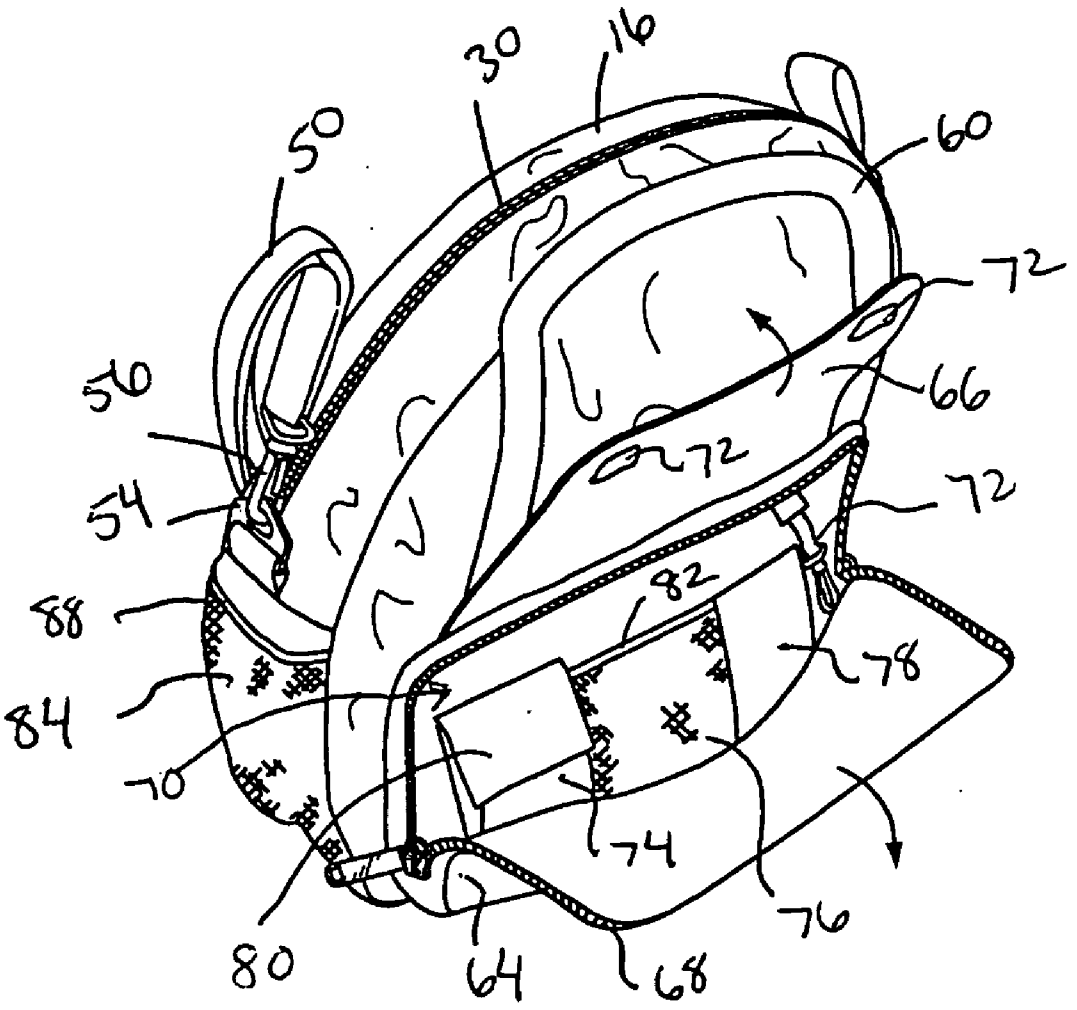

FIG.2

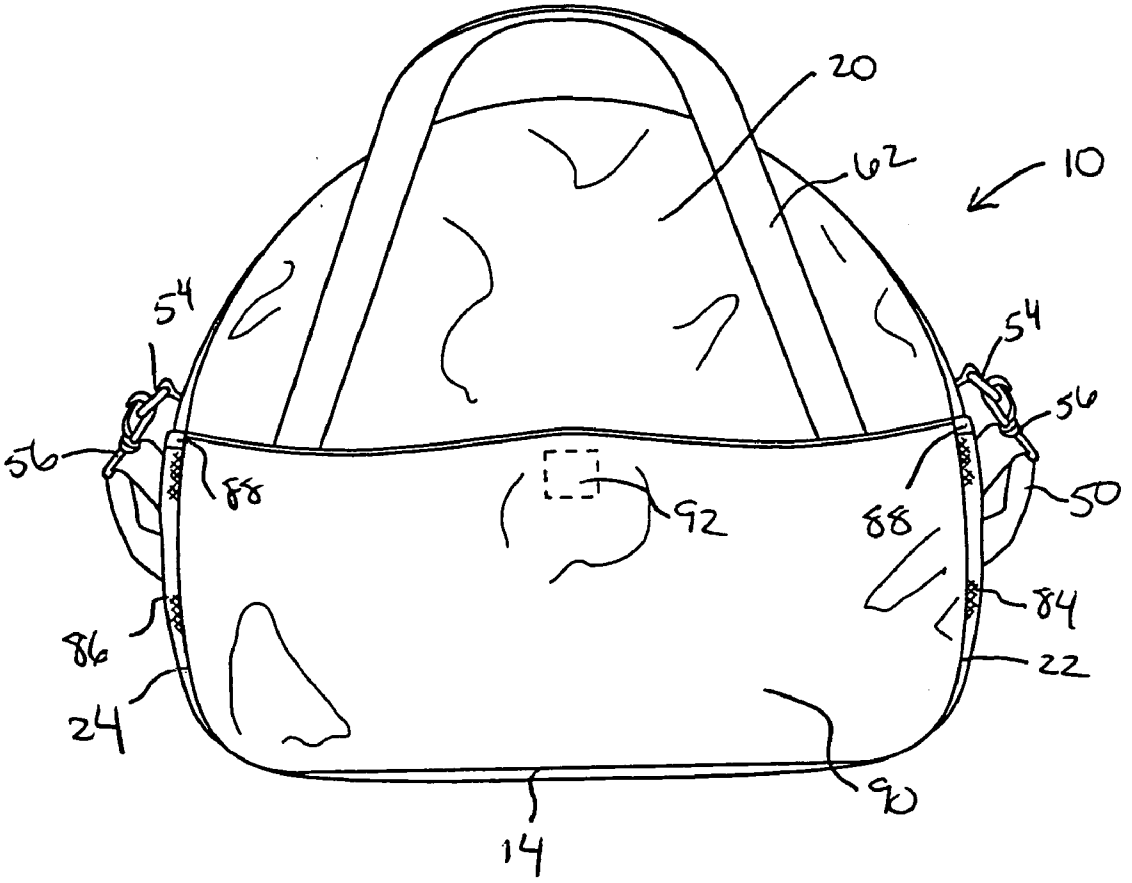

FIG. 3

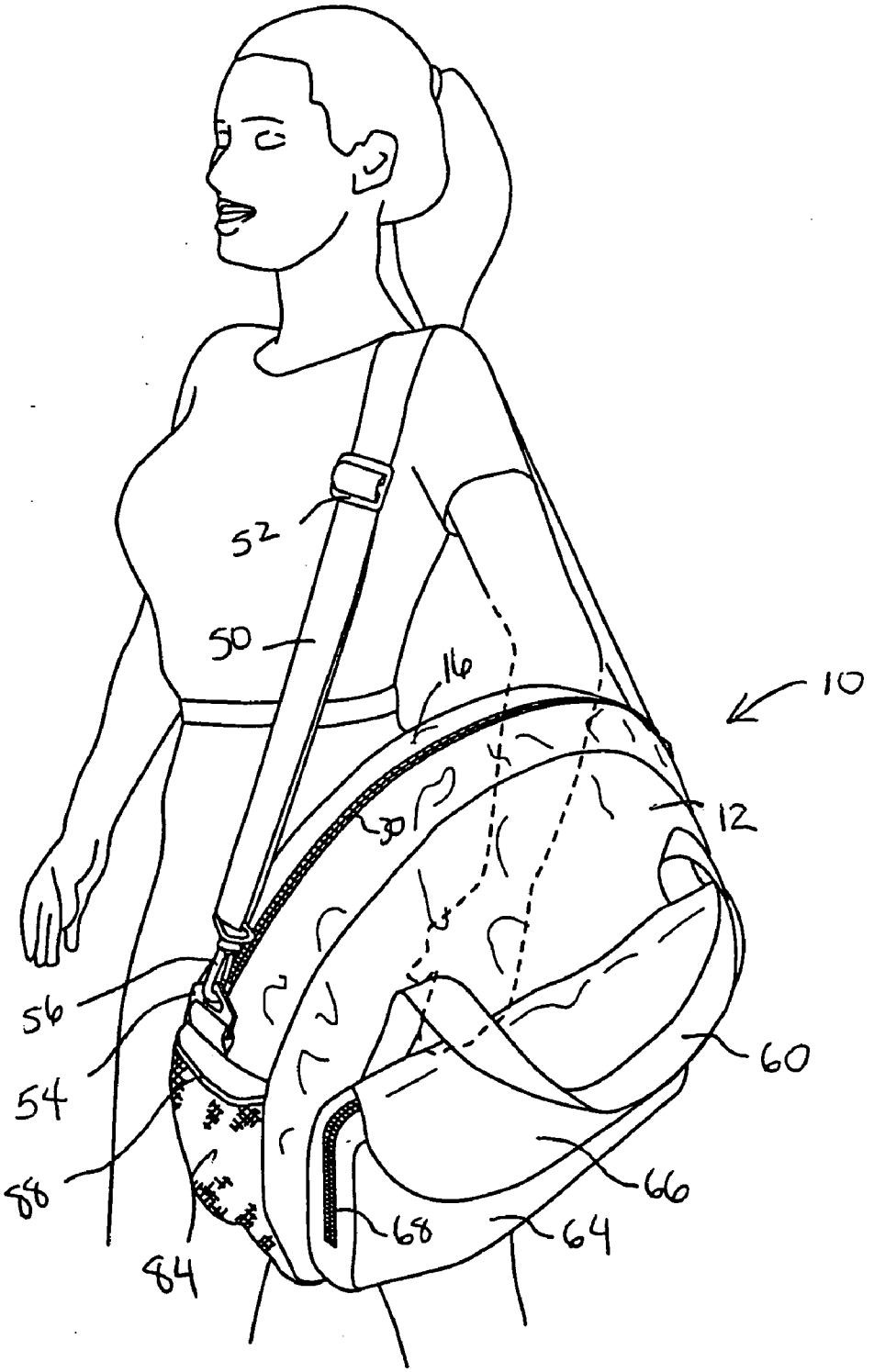

FIG. 4

DIAPER BAG AND CARRYING DEVICE

BACKGROUND OF THE INVENTION

[0001] This invention relates generally to the field of bags, and in particular to bags that are used to hold baby items, among others. More specifically, the invention relates to so-called diaper bags that may be used to carry various items used in caring for babies.

[0002] Diaper bags have been in widespread use for a number of years. Modern diaper bags often have various compartments for holding items. For example, some have lined compartments for holding diapers, baby wipes and the like. Other compartments may be used for storing books, toys, snacks and the like.

[0003] Many such diaper bags are rectangular in shape. While acceptable for some uses, such a configuration can make the diaper bag unsuitable for carrying other types of items.

BRIEF SUMMARY OF THE INVENTION

[0004] Hence, this invention relates generally to bags that may be used to carry a wide variety of items. Such bags may be constructed of a bag body having a top end, a bottom end, a front side and a back side. The bag body further includes a main compartment that extends from the bottom end to the top end. The top end has an opening leading into the main compartment. Further, the top end of the bag body is curved. In this way, a curved pillow having a curved medial region and two curved arms may be placed into the main compartment, with the medial region conforming to the shape of the top end. Of course, the pillow could be inserted into the main compartment in other orientations as well. For example, the two curved arms could be adjacent the top end. The bag may further include one or more carrying straps or handles to carry the bag.

[0005] In one aspect, the bag body may further include a pair of connecting sides that extend between the front side and the back side. The connecting sides may also be curved to conform to the shape of the curved arms of the pillow body. In another aspect, the carrying straps may be coupled to the bag body near where the top end meets the connecting sides.

[0006] The bag body may also include a fastener, such as a sipper, clasp, or the like to close the opening. If one or more handles are used, they may extend above the curved top end.

[0007] The bag may also include a variety of pockets, such as a pocket on the front side, on the back side, on the connecting sides and/or within the main compartment. One or more of the pockets may also include one ore more sub-pockets. These may be fashioned to hold specific types of items. For example, the main compartment or pockets may be configured to hold items such as a baby changing pad, storage devices, bottles, toys, food, diapers, wipes, clothing and the like.

[0008] When specifically designed for holding a curved pillow, the bag may have a height in the range from about 10 inches to about 20 inches, and may curved downward to the connecting sides that have a height in the range from about 5 inches to about 11 inches. The top end may also have a radius of curvature of about 7 inches to about 13 inches. Also, the bottom end may have a length in the range from about 15 inches to about 25 inches.

BRIEF DESCRIPTION OF THE DRAWINGS

[0009] **FIG. 1** is a front perspective view of a bag and exemplary items that may be held in the bag according to he invention.

[0010] **FIG. 2** illustrates the bag of **FIG. 1** with a front pocket opened.

[0011] **FIG. 3** is a rear view of the bag of **FIG. 1**.

[0012] **FIG. 4** illustrates the bag of **FIG. 1** when worn by a user.

DETAILED DESCRIPTION OF THE INVENTION

[0013] The invention provides bags that may be used to hold a variety of items. The bags may be particularly useful in carrying baby related items, although other items may be held as well. Examples of items that may be held include diapers, wipes, napkins, bibs, toys, snacks, drinks, books, clothing, pacifiers, and the like. One particular item that may be carried is a support pillow. Examples of support pillows that may be carried are described in U.S. Pat. Nos. 5,261,134, 5,661,861, 6,038,720, 6,055,687, 6,434,770, 6,532,612, 6,321,403, 6,279,185, 6,453,493, and 6,523,200, and copending U.S. application Ser. Nos. **10/046,377** filed Oct. 26, 2001; 09/884,742 filed Jun. 18, 2001; 09/802097 filed Mar. 8, 2001; 10,426,067, filed Apr. 28, 2003 (Atty. Dkt. No. 17242-010700), _____, filed on the same date as the present application (entitled "Multi-use Pillow and Methods", attorney docket no. 017242-010900), and _____, filed on the same date as the present application (entitled "Support Pillow for Small Infants", attorney docket no. 017242-011000), the complete disclosures of which are herein incorporated by reference. However, it will be appreciated that other pillows may be stored as well. In one embodiment, the bag may be configured to have a shape that generally conforms to the pillow so that the bag is somewhat form fitting. This serves to accommodate the shape of the pillow without using excess space.

[0014] The bag may also include a variety of internal and external pockets for storing various items. These pockets may be subdivided or include sub-pockets to facilitate holding specific types of items. For example, pockets may be used to hold bottles, food, drinks, pacifiers, wet or damp items, toys, and the like.

[0015] Referring now to **FIG. 1**, one embodiment of a bag **10** will be described. Bag **10** comprises a bag body **12** having a bottom end **14**, a top end **16**, a front side **18**, a back side **20** (see **FIG. 3**) and a pair of connecting sides **22** and **24**. Bag body **12** may be constructed of a wide variety of materials, such as nylon, fabrics (such as cotton, denim and polyester), leather and the like. Also, bag body **12** may be constructed of a combination of materials. For example, bag body **12** may have its interior or any pockets lined with a waterproof material.

[0016] Bag body **12** also includes an opening **26** that provides access into an interior **28**. Opening is formed in top end **16** and conveniently includes a zipper **30** that may be

used to close opening **26**. Other types of fasteners that may be used include snaps, buttons, hooks, straps, buckles, a hook and loop fastener material, a magnetic snap and the like.

[**0017**] Interior **28** may be used to hold a wide variety of items. By way of example, shown in **FIG. 1** is a pillow **32**, a changing pad **34** and a purse **36**. However, a variety of other items may be stored as well as described herein. Pillow **32** comprises a pillow body **38** having a curved medial region **40** and two curved arms **42** and **44** extending from medial region **40**. Pillow **32** may be constructed in a manner similar to and have similar sizes as those described in the patents incorporated herein by reference. As one example, medial region **40** may have a length in the range of about 12 inches to about 25 inches, and arms **42** and **44** may have a length in the range from about 7 inches to about 15 inches. The medial region **40** and arms **42** and **44** define a well **46** having a distance across of about 3 inches to about 12 inches. The thickness of pillow **32** may be in the range from about 3 inches to about 8 inches. The pillow **32** may be constructed of a variety of materials (including being inflatable) and may be generally flexible while still being firm.

[**0018**] When placed into interior **28** in the orientation shown in **FIG. 1**, medial region **40** is adjacent top end **16** and sides **22** and **24** are generally curved to conform to the shape and size of pillow **32**. For example, top end **16** may have a height in the range from about 10 inches to about 20 inches and sides **22** and **24** may have a height in the range from about 5 inches to about 11 inches. Top end **16** may also have a radius of curvature of about 7 inches to about 13 inches. Bottom end **14** may have a distance in the range from about 15 inches to about 25 inches and a width in the range from about 3 inches to about 12 inches.

[**0019**] Pillow **32** may be placed into interior **28** in essentially any orientation. For example, medial region **40** may be placed adjacent bottom end **14** or against one of sides **22** or **24**. If needed, pillow **32** may be squeezed or manipulated to help position it within interior **28**. By having a bag body **12** closely confirm to the shape of pillow **32**, the overall dimensions of bag body **12** may be minimized while also providing significant storage space for other items. Also, various pockets may also be included to provide additional storage space.

[**0020**] Changing pad **34** may comprise a padded member or may be a piece of fabric upon which a baby may be placed when changing a diaper or clothing. Pad **34** may conveniently be folded to help it fit within interior **28**. Pad **34** may also be constructed of fabrics used to construct bag body **12**.

[**0021**] Purse **36** defines an interior that may be accessible from its top end. Purse **36** may be used to hold a variety of items that may be used in taking care of a baby, such as wipes napkins, diapers and the like. Purse **36** may also be constructed of a transparent material.

[**0022**] To carry bag **10**, it may include a carrying strap **50** that may conveniently be worn over a user's shoulder as shown in **FIG. 4**. The length of strap **50** may be adjustable by using an adjustment buckle (see **FIG. 4**). Strap **50** may be connected to a buckle **54** located on bag body using clasps **56** so that it may be removed. However, other connecting mechanisms may be used as well.

[**0023**] Bag **10** may also include a pair of handles **60** and **62** (see **FIG. 3**) that are connected to bag body **12** and extend upward past top end **16**. This permits bag **10** to be carried by hand simply by grasping handles **60** and **62**.

[**0024**] Front side **18** includes a front pocket **64** that may optionally include a flap **66**. As best shown in **FIG. 2**, pocket **64** includes a zipper **68** that provides access into an interior **70**, although other fasteners may be used. When opened, the front of pocket **64** may be folded down as shown by the arrow. Flap **66** may also have a fastener material **72** that permits it to be secured to the front of pocket **64**. In this way, zipper **68** may be kept open, with flap **66** serving to close or cover the interior **70**. A variety of fasteners may be used including a hook and loop material, a magnetic snap, other snaps and the like.

[**0025**] Included within interior **70** is a key attachment device that permits a key ring to be held within interior **70**. Interior **70** also includes a set of sub-pockets **74**, **76** and **78**. These may be used to hold a variety of items as selected by the user. Sub-pocket **74** may include a flap **80** that may be lifted to provide access into the interior of sub-pocket **74**. A fastening material may be used to hold flap **80** closed.

[**0026**] Sub-pocket **76** may be constructed of a mesh, string or other breathable material. An elastic band **82** may be used to help hold items in sub-pocket **76**. Sub-pocket **78** may be constructed of essentially any material and permits items to be slipped into its top end.

[**0027**] Bag **10** also includes side pockets **84** and **86** that may be constructed of a mesh or other material similar to sub-pocket **76**. An elastic material **88** may also be placed at the top end of pockets **84** and **86** to help hold items in pockets **84** and **86**. Side pockets **84** and **86** are especially useful in holding items such as bottles, glasses, sipper cups and the like.

[**0028**] As best shown in **FIG. 3**, bag **10** may also include a back pocket **90** that extends across the length of the back side **20**. A fastener material **92** may be used to help hold pocket **90** closed. Other fasteners may be used as well, including magnetic snaps, ties, and the like. Also, although not shown, pocket **90** may be subdivided into multiple pockets. Pocket **90** is especially useful for holding large thin items, such as books, paper and the like, as well as items that need to be easily accessed.

[**0029**] The invention has now been described in detail for purposes of clarity and understanding. However, it will be appreciated that certain changes and modifications may be practiced within the scope of the appended claims.

What is claimed is:

1. A bag for carrying items, the bag comprising:

a bag body having a top end, a bottom end, a front side and a back side, wherein the bag body further defines a main compartment that extends from the bottom end to the top end, wherein the top end defines an opening that provides access to the main compartment, wherein at least the top end of the bag body is curved so that the main compartment is adapted to hold a curved pillow having a medial region and two extending arms, with the medial region of the pillow conforming closely to the shape of the top end of the bag body; and

at least one carrying strap coupled to the bag body for carrying the bag.

2. A bag as in claim 1, wherein the bag body further includes a pair of connecting sides that extend between the front side and the back side, wherein the connecting sides are curved and are adapted to conform to the shape of the extending arms of the curved pillow.

3. A bag as in claim 2, wherein the carrying strap has a pair of ends and wherein the ends of the straps are coupled to the bag body near where the top side intersects with the connecting sides.

4. A bag as in claim 1, further comprising a fastener to close the opening.

5. A bag as in claim 1, further comprising at least one handle that is coupled to the bag body.

6. A bag as in claim 5, wherein the handle is coupled to the front side and extends above the top end.

7. A bag as in claim 1, further comprising a front pocket that is coupled to the front side of the bag body.

8. A bag as n claim 7, wherein the front pocket includes a plurality of sub-pockets.

9. A bag as in claim 1, further comprising a side pocket that is coupled to one of the connecting sides.

10. A bag as in claim 1, further comprising a rear pocket that is coupled to the rear side of the bag body.

11. A bag as in claim 1, further comprising at least one peripheral item stored within the bag body, wherein the peripheral item is selected from a group consisting of changing pads, storage devices and toys.

12. A bag as in claim 2, wherein the bag body has a height in the range from about 10 inches to about 20 inches and curves downward to the connecting sides that each have a height in the range from about 5 inches to about 11 inches.

13. A bag as in claim 1, wherein the curved top end has a radius of curvature in the range from about 7 inches to about 13 inches.

14. A bag as in claim 1, wherein the bottom end has a length in the range from about 15 inches to about 25 inches.

15. A system for carrying items, the system comprising

a bag body having a top end, a bottom end, a front side and a back side, wherein the bag body further defines a main compartment that extends from the bottom end to the top end, wherein the top end defines an opening that provides access to the main compartment, wherein at least the top end of the bag body is curved;

at least one carrying strap coupled to the bag body for carrying the bag; and

a pillow stored within the main compartment, wherein the pillow comprises a curved pillow body having a medial region and two opposing arms extending from the medial region, and wherein the medial region closely conforms to the shape of the curved top end of the bag body.

16. A system as in claim 15, wherein the bag body further includes a pair of connecting sides that extend between the front side and the back side, wherein the connecting sides are curved and are adapted to conform to the shape of the extending arms of the curved pillow.

17. A system as in claim 16, wherein the carrying strap has a pair of ends and wherein the ends of the straps are coupled to the bag body near where the top side intersects with the connecting sides.

18. A system as in claim 15, further comprising a fastener to close the opening.

19. A system as in claim 15, further comprising at least one handle that is coupled to the bag body.

20. A system as in claim 19, wherein the handle is coupled to the front side and extends above the top end.

21. A system as in claim 15, further comprising a front pocket that is coupled to the front side of the bag body.

22. A system as in claim 21, wherein the front pocket includes a plurality of sub-pockets.

23. A system as in claim 15, further comprising a side pocket that is coupled to one of the connecting sides.

24. A system as in claim 15, further comprising at least one peripheral item stored within the bag body, wherein the peripheral item is selected from a group consisting of changing pads, storage devices and toys.

25. A system as in claim 16, wherein the bag body has a height in the range from about 10 inches to about 20 inches and curves downward to the connecting sides that each have a height in the range from about 5 inches to about 11 inches.

26. A system as in claim 15, wherein the curved top end has a radius of curvature in the range from about 7 inches to about 13 inches.

27. A system as in claim 15, wherein the bottom end has a length in the range from about 15 inches to about 25 inches.

28. A system as in claim 15, wherein the medial region has a length in the range from about 12 inches to about 25 inches, and wherein the arms have a length in the range from about 7 inches to about 15 inches.

29. A method for carrying a pillow, the method comprising:

providing a bag comprising a bag body having a top end, a bottom end, a front side and a back side, wherein the bag body further defines a main compartment that extends from the bottom end to the top end, wherein the top end defines an opening that provides access to the main compartment, wherein at least the top end of the bag body is curved, and at least one carrying strap coupled to the bag body for carrying the bag;

providing a pillow comprising a curved pillow body having a medial region and two curved arms extending from the medial region;

squeezing the arms toward each other and pushing the pillow into the main compartment; and

closing the opening, with the medial region closely conforming to the shape of the top end of the bag body.

30. A method as in claim 29, further comprising removing the pillow from the bag and supporting a baby with the pillow.

* * * * *