Oct. 12, 1948. I. X. CALHOUN 2,450,934

WELL PIPE HANDLING APPARATUS

Filed May 25, 1946 3 Sheets-Sheet 1

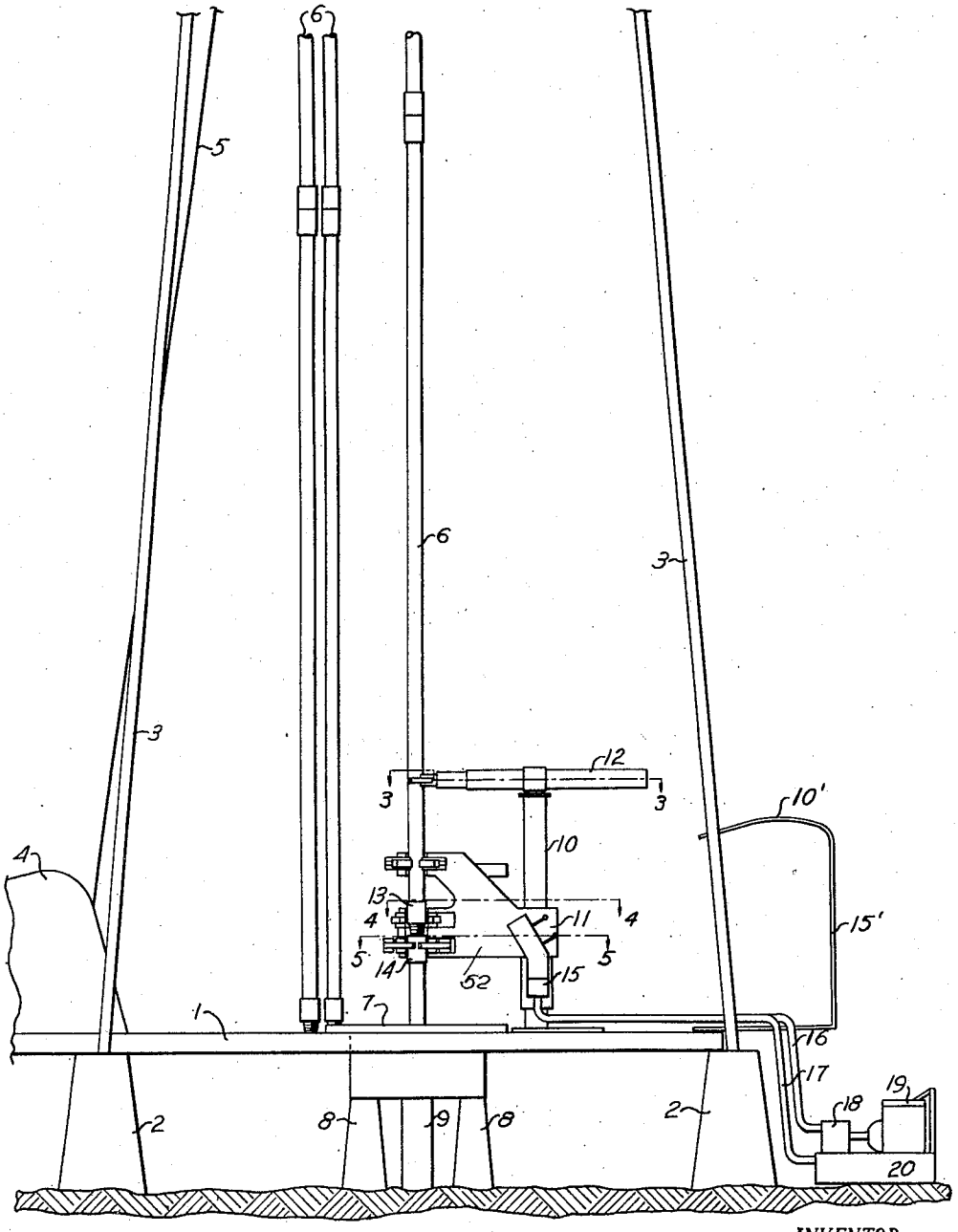

Fig. 1

INVENTOR.

BY Ingram X. Calhoun

ATTORNEY

Oct. 12, 1948. I. X. CALHOUN 2,450,934

WELL PIPE HANDLING APPARATUS

Filed May 25, 1946 3 Sheets-Sheet 2

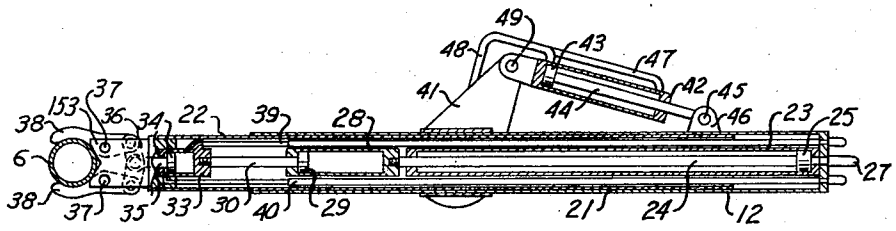

Fig. 3

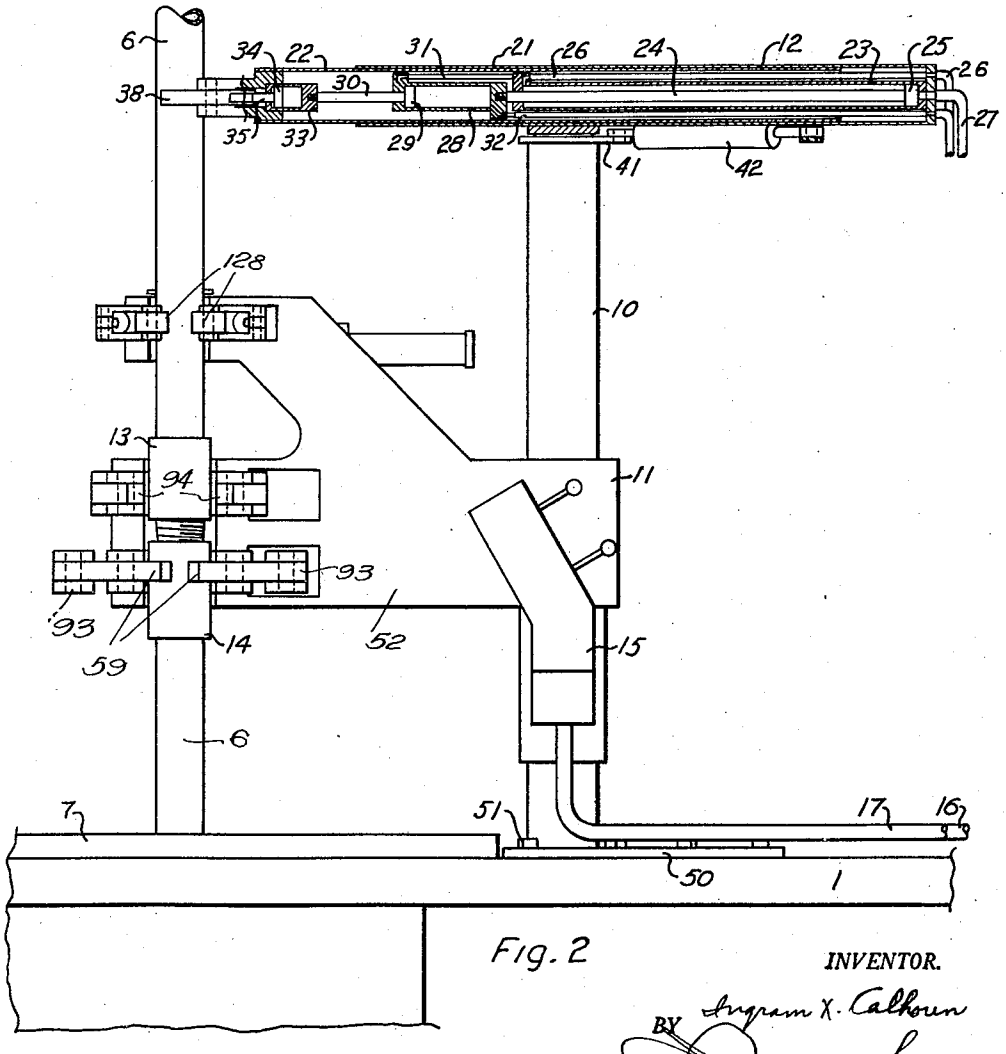

Fig. 2

INVENTOR.

BY Ingram X. Calhoun

ATTORNEY

Oct. 12, 1948. I. X. CALHOUN 2,450,934

WELL PIPE HANDLING APPARATUS

Filed May 25, 1946 3 Sheets-Sheet 3

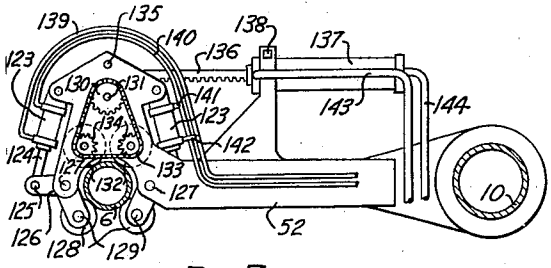

Fig. 7

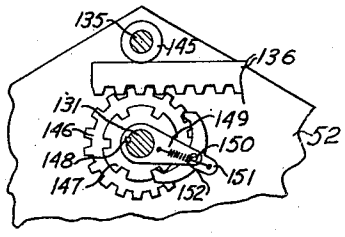

Fig. 8

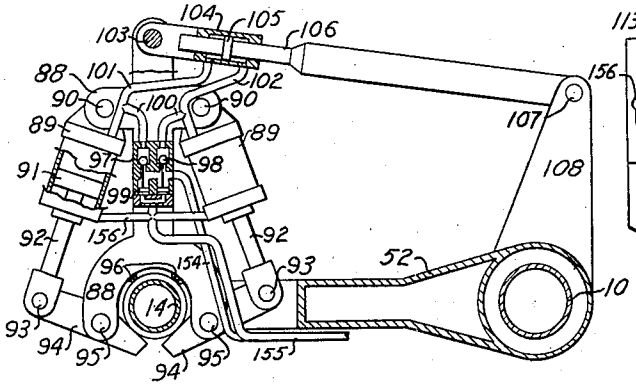

Fig. 5

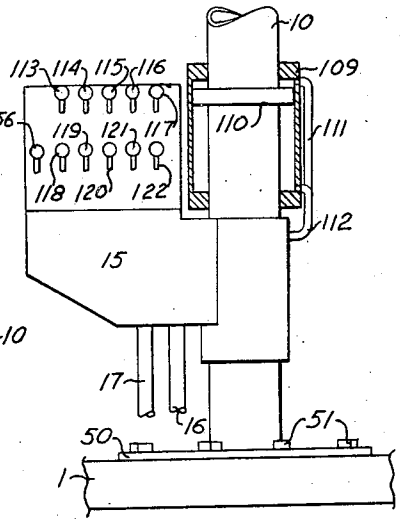

Fig. 6

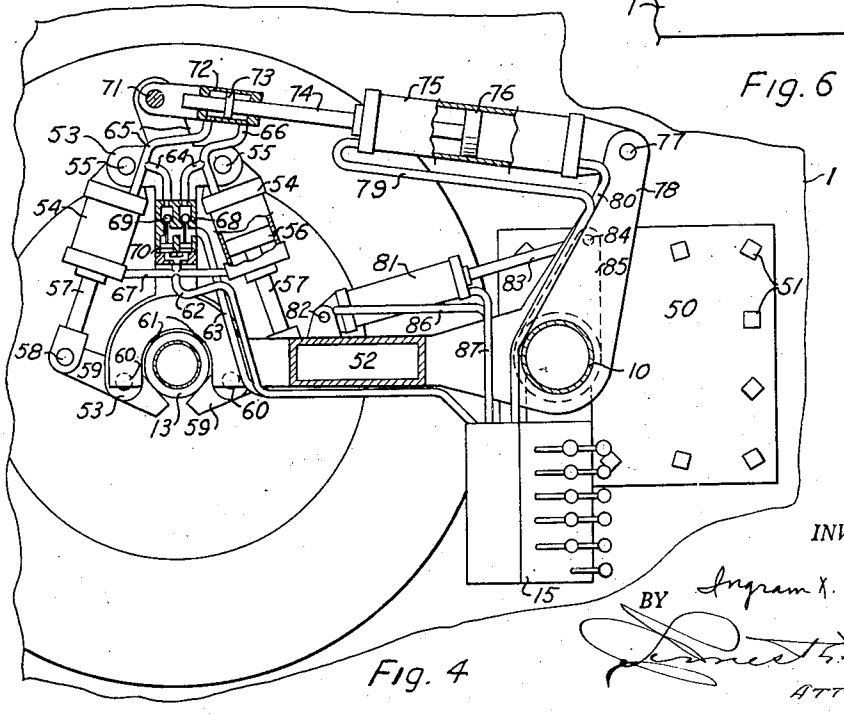

Fig. 4

INVENTOR.

BY Ingram X. Calhoun

ATTORNEY

Patented Oct. 12, 1948 2,450,934

UNITED STATES PATENT OFFICE

2,450,934

WELL PIPE HANDLING APPARATUS

Ingram X. Calhoun, Oklahoma City, Okla.

Application May 25, 1946, Serial No. 672,273

5 Claims. (Cl. 255—35)

1

This invention relates to well drilling equipment and more particularly to hydraulically actuated tongs for making and breaking joints of pipe.

The principal object of the invention is to provide a hydraulically actuated tong constructed and arranged with a view towards preserving the safety of the operators and workmen as well as to minimize the usually strenuous labor required in positioning pipe sections and in making and breaking joints. The invention anticipates such a tong, mounted on a post or upright on a derrick floor, in close proximity to the work and provided wtih a detachable control head operable by means of flexible hydraulic lines so disposed that an operator may manipulate the tong from a remote position safe from falling objects.

Another object of the invention is to provide, as a complement to the tong, a hydraulically actuated, work positioning and orienting arm mounted on the supporting post of the tong and actuated also by hydraulic lines connected to a source of pressure situated remotely from the point of operations. By virtue of the automatic work positioning arm, control of the work is assured with comparatively little hazard and labor on the part of an operator.

Still another object of the invention is to provide pipe handling, assembling and disassembling equipment, hydraulically actuated, which is so constructed and arranged that all controls are conveniently operated in the comparative safety of a steel topped shelter located at one side of the derrick floor.

With the foregoing objects as paramount, the invention has further reference to certain features of accomplishment which will become apparent as the description proceeds, taken in connection with the accompanying drawings wherein:

Figure 1 is a fragmentary side elevational view of a well derrick, showing the invention mounted in operative position on the floor thereof.

Figure 2 is a side elevational view of the invention, showing the work positioning arm in longitudinal section.

Figure 3 is a top plan view of the work positioning arm in longitudinal section, taken on line 3—3 on Figure 1.

Figure 4 is a plan view of the tightening tong, partly in section, taken on line 4—4 on Figure 1.

Figure 5 is a plan view partly in section, showing the work holding tong, taken on line 5—5 on Figure 1.

Figure 6 is a side elevational view of the control panel, showing in vertical section the tong assembly elevating mechanism.

2

Figure 7 is a plan view of a joint spinning unit, which is a part of the complete assembly, and

Figure 8 is a detail plan view of the gearing and reversible ratchet mechanism of the spinning unit shown in Figure 7.

Continuing with a more detailed description of the drawings, reference is primarily made to Figure 1 wherein numeral 1 denotes the derrick floor, resting on the foundation 2. Legs 3 constitute a part of the derrick frame and are mounted on the floor 1. A hoisting unit 4 operates the hoisting line 5 to raise and lower sections 6 of the drill stem in a conventional manner. A rotary table 7 is shown as being mounted on supports 8 and a well control casing 9 below the rotary extends into the well.

At one side of the derrick floor is a shelter 15' of steel whose top 10' protects an operator in the shelter from any objects likely to fall in the derrick.

An upright or post 10 is secured by lag screws or bolts 51 extending through a base plate 50 into the derrick floor. This post is adapted to support the tong of the invention which, in Figure 1, is generally designated by reference numeral 11, and is employed to screw up and unscrew the upper tool joint 13 from the lower tool joint 14. Further reference in detail to this tong will be made presently.

A manipulator arm, generally designated at 12 in Figure 1, is constructed and arranged to take sections of drill stem 6, being lifted and held from above by hoisting line 5 and position them accurately over the lower tool joint 14.

A control head 15 located adjacent the support of the tong 11 contains valves designed to enable an operator to control the apparatus which is operated by hydraulic pressure through line 16 from pump 18, operated by engine 19. Line 17 returns spent fluid to reservoir 20. A shelter 15' is provided into which the operator may move should protection from falling objects be needed.

Referring now to Figures 2 and 3, it will be observed that an outer guide cylinder 21, forming a part of the work manipulating arm 12, is attached rotatively to the supporting post 10 and contains an inner guide sleeve 22, the latter being movable axially with respect to the guide cylinder 21. A major actuating cylinder 23 is attached rigidly to the closed end of the guide cylinder 21 and a piston 25 mounted on cylinder 23 operates a piston rod 24 to move indexing cylinder 28, thereby moving head 153 (Figure 3).

Piston 29 of the indexing cylinder 28 actuates a piston rod 30 which is screwed into a jaw operating cylinder 33. This latter cylinder is rigidly attached to the inner guide cylinder 22 by means of the shank of the head 153, previously referred to. The piston 34 carried by the cylinder 33 operates a piston rod 35 to pivot jaws 38 about pins 37 by means of links 36, thereby contracting the jaws 38 onto the drill stem 6 to hold the same. To open the jaws 38, fluid is caused to flow into cylinder 33 through extensible pipe 40 and finds escape through extensible pipe 39 and to effect closing of the jaws, the flow of fluid is reversed.

An arm 41 is rigidly attached to post 10 and serves as a means of attachment of a cylinder 42 through the medium of a pin 49. Operating within the cylinder 42 is a piston 43 which is actuated by a rod 44, pivoted by means of a pin 45 to a bracket 46 attached to the outer guide cylinder 21. The described cylinder and piston arrangement is effective to oscillate the manipulator arm about the axis of post 10 through an angle of approximately 60°. To operate the piston 43, fluid is caused to flow in line 48 and escapes through line 47 to actuate the arm 12 away from the center of rotary table 7. Reverse flow of fluid causes the arm to advance towards the center of the rotary table.

When the arm 12 is in the position shown in Figure 3, that is, with cylinder 23 fully retracted; cylinder 28 fully extended and cylinder 42 fully retracted, the drill stem 6 is directly over the center of rotary table 7 and upper tool joint 13, lower tool joint 14 are in position for threaded engagement. Fluid flows through pipes 26 and 27 to operate cylinder 23, and through extensible pipes 31 and 32 to operate indexing cylinder 28. The piping is but fragmentarily shown in Figure 3 for the sake of clarity but all piping is connected to the control head 15, shown in Figures 1 and 2.

Referring now to Figure 4; frame assembly 52 is shown as pivoted about post 10 and contains the tightening tong, holding tong and spinning device in the relationship shown in Figure 2. A cylinder 54 is attached by means of pins 55 to a torque tong frame 53. The cylinder 54 serves as a gripping cylinder and its piston 56 extends and retracts the rod 57 of the piston, thereby moving jaws 59 by means of a connecting pin 58. Jaws 59 pivot about a pin 60 mounted in the torque tong frame 53, thereby pressing the upper tool joint 13 against hardened teeth 61.

Hydraulic fluid check valve 68 operates in the following manner to maintain heavy pressure for gripping of the tool joint 13 by by jaws 59:

Hydraulic fluid flows into check valve 68, past balls 69 and out through lines 64 and line 66, filling both ends of cylinder 72, collapsing jaws 59 by displacing pistons 56 and rods 57 in cylinders 54. Balls 69 prevent the return of any of the hydraulic fluid as torque cylinder 75 rotates the torque tong 53. Piston 73 in cylinder 72 is actuated by a piston rod 74, creating high pressure in cylinder 72, proportional to the force applied by the piston 76 in cylinder 75. This high pressure is transmitted through line 65 to right hand cylinder 54 when the joint is being loosened and through line 66 to the left hand cylinder 54 when the joint is being tightened, thereby increasing the holding power in proportion to the torque applied.

To unclamp jaws 59 from the pipe, fluid is admitted under pressure through line 62, exerting pressure on piston 70 in cylinder 68, unseating balls 69, allowing fluid to flow out line 63, whereupon piston rods 57 will be retracted by means of fluid flowing into the rod end of cylinder 54 through line 67.

Torque cylinder 75 is connected to the frame assembly 52 by means of a pin 77 in an arm 78. The piston 76 of the torque cylinder 75 is connected by means of rod 74 to piston 73 of the cylinder 72 which latter serves as an intensifier cylinder. A pin 71 attaches cylinder 72 to the torque tong frame 53.

In order to screw up a joint, fluid is admitted to cylinder 75 through line 79 and finds release through line 80. Obviously, flow of fluid is reversed when a joint is to be unscrewed.

To rotate the frame assembly 52 (Fig. 4), a cylinder 81 is provided, its piston rod 83 being attached to post 10 by means of a bell crank 85 and a pin 84. A pin 82 connects cylinder 81 to the frame assembly 52 which is rotated away from the center of the derrick floor by admitting fluid through a line 86 and discharging through line 87. Reverse movement of the frame assembly is effected by reversing the flow of fluid.

Referring now to Figure 5, it will be observed that the frame or bracket 52 referred to above as the frame assembly, also supports and guides a pipe holding tong frame 88. A pair of cylinders 89 are attached to the tong frame 88 by means of pins 90 and, through the medium of pistons 91 and rod 92, serve as a means for actuating jaws 94. These jaws are pivoted on pins 95 and the rods 92 are pivoted to the outer ends of jaws 94 by means of pins 93. The cylinders 89 are therefore effective as gripping cylinders. When piston rods 92 are extended, as shown in Figure 5, the jaws 94 clamp the lower tool joint 14 against hardened teeth 96 in the tong frame 88.

Hydraulic fluid check valve 97 operates in the following manner to maintain heavy pressure for gripping of the tool joint 14:

Fluid under pressure flows through line 154, into check valve 97, past balls 98 and out through lines 100 to line 101 and line 102, filling both ends of cylinder 104 and into cylinder 89, extending piston rods 92, thereby causing jaws 94 to advance upon and clamp the pipe joint 14. Torque applied by the upper tong causes relative movement between cylinder 104 and piston 105, generating pressure in proportion to the torque applied. This pressure is transmitted by line 101 to the left hand cylinder 89 when the joint is being tightened and by line 102 to the cylinder 89 on the right in Figure 5 when the joint is to be loosened, thereby increasing the holding power in proportion to the torque applied.

To unclamp jaws 94, fluid is admitted through line 155, into check valve 97, causing pistons 99 to move upwardly, upsetting balls 98 from their seats, permitting fluid to flow out through line 154 and in through line 156, thereby retracting piston rods 92.

Piston rod 106 of cylinder 104 transmits torque from holding tong frame 88 to frame assembly 52, cylinder 104 being attached to tong frame 88 by means of pin 103. Piston rod 106 is attached to frame assembly 52 by an arm 108 and a pin 107.

Referring to Figure 6; post 10 serves in the capacity of a piston rod for a piston 110 and a cylinder 109, the latter embracing the post 10 and raises and lowers the complete tong assembly 11 with respect to the derrick floor 1. Fluid admitted through line 111 raised the tong assembly 11, while fluid admitted through line 112 lowers

the assembly, as will become obvious from an examination of Figure 6.

The control head 15 is detachable from the post 10 and, by means of flexible lines, the control head is enabled to operate the machine from any suitable point at the well site. This being true, the operator may efficiently operate the control head at a safe position such as in the shelter 15', protected by its steel roof 16'. Line 16 delivers hydraulic fluid under pressure to the control valves of head 15 and line 17 conveys spent and excess fluid back to its source.

The valves of the control head 15 are connected to their respective units by suitable rigid and flexible lines. Valve 113 is connected to lines 154 and 155 and serves to clamp and unclamp the lower holding jaws. Valve 114 is connected to lines 62 and 63 and serves to clamp and unclamp the upper torque jaws. Valve 115 is connected to lines 79 and 80 and serves to rotate the upper torque tong for loosening and tightening joints. Valve 116 is connected to lines 139 and 140 (Fig. 7) and serves to clamp and unclamp the spinner roller jaws 128. Valve 117 is connected to lines 143 and 144 (Fig. 7) and controls rotation of the spinner driving rolls. Valve 118 is connected to lines 111 and 112 (Fig. 6) and controls the raising and lowering of the complete tong assembly. Valve 119 is connected to lines 79 and 80 and controls rotation of the upper torque tong. Valve 120 is connected to lines 39 and 40 and controls the clamping and unclamping action of manipulator arm jaws 38 (Fig. 3). Valve 121 is connected to lines 47 and 48 (Fig. 3) and controls rotation of the manipulator arm 12 about the supporting post 10. Valve 122 is connected to lines 26 and 27 (Fig. 2) and controls the operation of the main extending and retracting cylinder of the manipulating or work orienting arm 12. Valve 156 is connected to lines 31 and 32 and is effective to extend and retract the indexing cylinder 28 of the manipulator arm 12. All of the valves mentioned are connected to pressure line 16 and return line 17.

In Figure 7 is shown the rapid spinner mechanism for screwing joints up to all torque within its capacity before actual tightening is effected by means of the main tong. The spinner mechanism is also applied to complete the operation of separating the tool joints once they are broken by the tong. The tong frame assembly 52 supports and guides the spinner in operation.

The spinner assembly consists of the hydraulic clamping cylinder 123, with piston rods 124 attached to arms 126 by means of pins 125. The arms 126 pivot about pins 127 in the frame assembly 52 and are supplied with rollers 128 on pins 129. The rollers 128, when in clamped position, press the drill stem 6 back against the knurled driving rolls 132 for spinning in or spinning out the joint.

Drivingly attached to knurled rollers 132 are sprockets 134, about which a chain 133 is passed as shown in Figure 7. This chain also extends about a sprocket 130 which is mounted on a driving shaft 131. In Figure 8 is shown an arm 149, which is connected to shaft 131 by a key 148. An escapement lever 151 is pivoted to oscillate on a pin 150 mounted in the arm 149 and a spring 152 holds the lever 151 in the position shown for counterclockwise rotation of ratchet wheel 147 which is the direction of travel when spinning in joints. In spinning out joints, ratchet wheel 147 is rotated in a clockwise direction, the lever 151 is pivoted about pin 150 until the opposite end engages ratchet wheel 147, spring 152 also holding it in this position.

A gear 146 is also mounted on shaft 131 and is driven by a rack 137 and rotates in common with ratchet wheel 147. A roller 145, mounted on a shaft 135 bears against the reverse side of the rack 136 and maintains meshed relationship of the teeth of the rack with those of the gear 146.

Referring again to Figure 7; a cylinder 137 is shown clamped in the frame assembly 52 by means of a bolt 138 and the extended end of the piston rod of this cylinder is actually the aforementioned rack bar 136 which, as stated, engages the gear 147 to drive the same for actuating the spinner mechanism in the manner described.

A line 144 supplies fluid to cylinder 137 for the extending stroke of its piston to actuate the rack 136 longitudinally while a line 143 supplies fluid for the retracting stroke of the cylinder 137.

In operation, the pipe handling equipment described is set up in the manner illustrated in Figure 1. As the operating line 5 is actuated to lower the pipe elevator (not shown) to suspend a section of pipe 6 over that already in the well, the lower portion of the suspended section is clamped by the jaws 38 of the manipulating arm 12 to orient its threaded end with that of the set pipe section. Operation of this arm having been described, it is sufficient to point out that the arm is actuated by suitable valves accessible to an operator from his position in the shelter 15'. It is obvious that the arrangement makes possible the positioning of pipe without the necessity, as heretofore, for handlers to grasp and position the pipe by hand.

After the tool joints 13 and 14 have been engaged in the manner described, the rapid spinner mechanism is set in motion by the operator without leaving his position in the shelter 15' and the upper joint is spun to the limited torque capacity of the spinner after which the operator actuates valves necessary to set into operation the jaws of the holding tong illustrated in Figure 5 to clamp the lowermost pipe section preparatory to threading into the same the suspended pipe section thereabove.

Having completed the operations of positioning, spinning and clamping the pipe, the operator then actuates the described valves for closing the jaws 59 of the main tong illustrated in Figure 4 and subsequently opening valves which supply fluid effective to oscillate the jaws for the application of the required torque to tighten the joint.

In breaking and spinning out joints in pulling pipe, the above described operation is reversed.

Manifestly, the construction as shown and described is capable of some modification and such modification as may be construed to fall within the scope and meaning of the appended claims is also considered to be within the spirit and intent of the invention.

What is claimed is:

1. Pipe handling equipment for well drilling including in combination with a single supporting post adjacent the drill hole of a well, providing a common mounting for said equipment, the latter comprising a frame oscillatably and vertically displaceable on said post, a jaw carrying member supported by said frame for holding a pipe string in said drill hole, a complementary jaw carrying member above said first member for rotating a pipe section suspended above said pipe string, a third jaw carrying member above said second member for imparting to said suspended pipe sec-

tion rapid rotation preliminary to the action of said second member, a pipe manipulating arm oscillatably mounted on the upper end of said post and having pipe engaging jaws, hydraulic means associated with each of said members and said manipulator arm for actuating the jaws thereof, a detachable control head on said frame and separate valve means in said head for controlling pressure fluid to and selectively actuating the hydraulic means in each of said jaw carrying members and said manipulator arm.

2. Pipe handling equipment for well drilling including a unitary structure mounted for oscillative movement towards and away from the drill hole of a well, a single post adjacent said well hole affording a support for said structure, the latter comprising a pipe engaging and positioning member, a pipe holding tong, a pipe rotating tong and a spinning tong, hydraulically actuated jaws carried by said positioning member and each of said tongs, a hydraulic control head detachably mounted on the supporting post of said structure, a cylinder embracing said post and supporting said pipe engaging, pipe holding and pipe spinning tongs, a piston stationary with said post within said cylinder, and valve means in said control head for selectively operating the jaw assemblies of said positioning member and said tongs and for displacing said cylinder on said post to raise and lower said tongs.

3. Pipe handling equipment for drilling wells including an upright post adjacent the drill hole of a well, providing a common support for said equipment, a horizontal disposed frame, a cylinder vertically movable on said post adjacent its lower end, a piston on said post within said cylinder, means for hydraulically charging said cylinder to effect oscillative and vertical displacement of said frame on said post, a pipe holding tong mounted on said frame having hydraulically actuated jaws, a torque imposing tong also mounted on said frame having hydraulically actuated jaws, a spinning tong supported by said frame having hydraulically actuated roller jaws, a pipe positioning arm supported oscillatably on the upper end of said post above said frame having hydraulically actuated jaws, a control head on said frame and valve means in said control head for selectively operating said tongs and said pipe positioning arm.

4. Apparatus for assembling and disassembling pipe strings in a well from a position spaced from said well, including a single upright adjacent said well, having a piston stationarily mounted thereon, a frame having an integral cylinder embracing said upright and said piston and hydraulically movable longitudinally and oscillatively thereon, pipe gripping and holding means carried by said frame, torque imposing means in said frame above said gripping means, pipe spinning means in said frame above said torque imposing means, said gripping, torque imposing and spinning means having hydraulically actuated work engaging means therein, a pipe positioning arm mounted on said upright above said spinning means carrying pipe engaging jaws and means assembled on said upright for controlling the flow of hydraulic fluid to each of said means for selectively actuating the same.

5. Apparatus of the character described including a single supporting post having a piston stationarily mounted thereon, a cylinder surrounding said piston, a frame mounted on said piston and disposed for oscillative and vertical displacement in a horizontal plane adjacent a well hole, independent, hydraulically actuated means carried by said frame for holding, rotating and spinning pipe sections for assembling and disassembling a pipe string with respect to said well hole, hydraulically actuated means above said pipe holding, rotating and spinning means for engaging and positioning pipe sections above said well hole, pipe engaging jaws in each of said hydraulically actuated means and means assembled on said post for controlling the flow of hydraulic fluid to said pipe holding, rotating and spinning means and said pipe positioning means to actuate their respective pipe engaging jaws.

INGRAM X. CALHOUN.

REFERENCES CITED

The following references are of record in the file of this patent:

UNITED STATES PATENTS

Number	Name	Date
2,311,225	Grable	Feb. 16, 1943
2,317,306	Smith	Apr. 20, 1943
2,351,851	Young	June 20, 1944