(19) Europäisches Patentamt
European Patent Office
Office européen des brevets

(11) EP 1 855 049 A1

(12) EUROPEAN PATENT APPLICATION

(43) Date of publication:
14.11.2007 Bulletin 2007/46

(51) Int Cl.:
F21S 8/00 *(2006.01)* ***F21V 21/14*** *(2006.01)*
F21V 21/30 *(2006.01)* ***F21V 21/116*** *(2006.01)*

(21) Application number: **07107321.7**

(22) Date of filing: **02.05.2007**

(84) Designated Contracting States:
AT BE BG CH CY CZ DE DK EE ES FI FR GB GR HU IE IS IT LI LT LU LV MC MT NL PL PT RO SE SI SK TR
Designated Extension States:
AL BA HR MK YU

(30) Priority: **09.05.2006 IT MI20060166 U**

(71) Applicant: **iGUZZINI ILLUMINAZIONE S.p.A.**
62019 Recanati-Macerata (IT)

(72) Inventor: **Gattari, Massimo**
62018 Potenza Picena (Macerata) (IT)

(74) Representative: **De Gregori, Antonella et al**
Ing. Barzano' & Zanardo Milano S.p.A.
Via Borgonuovo 10
20121 Milano (IT)

(54) Orientable Lighting Appliance

(57) An orientable lighting appliance of the type comprising a supporting arm (10), suitable for installation on a fixed structure, which supports, by means of a hinge (18), at least one lamp space (12) inside which there is at least one light source. The lighting appliance also comprises at least one lever (20) slidingly coupled with the supporting arm (10) and constrainable thereto, hinged on the lamp space (12) by means of a pin (22) having a parallel and distanced rotation axis with respect to the rotation axis of the hinge (18).

EP 1 855 049 A1

Description

[0001] The present invention relates to an orientable lighting appliance, suitable in particular but not exclusively for wall installations, having considerable usefulness and convenience of use.

[0002] Lighting appliances are known, which substantially comprise a projector which can be rotated around an arm suitable for wall or ceiling installations. These lighting appliances are normally used for directly and distinctly illuminating a certain target and their particular characteristic is that they can be easily orientated depending on the requirements of use.

[0003] One of the disadvantages of some of the orientable lighting appliances according to the known art, however, is that they do not envisage adequate means for blocking the projector once the desired lighting position has been found. In these appliances, in fact, the blocking is simply due to the friction caused in correspondence with the joining hinge between the arm fixed to the wall and the projector itself, and consequently there is no guarantee of the necessary safety and stability, especially after prolonged use.

[0004] Some lighting appliances therefore envisage specific blocking mechanisms in the position of the projector once it has been oriented as required, but these mechanisms are not only complicated to produce and manoeuvre but also have external activating elements which in some way disturb the aesthetic appearance of the lighting appliance itself.

[0005] An objective of the present invention is therefore to provide an orientable lighting appliance, suitable in particular for direct wall or ceiling installations but also possibly on specific guiding rails, which is capable of eliminating the above drawbacks, simplifying the orientation and making the subsequent blocking of the projector which rotates around its supporting arm, more stable.

[0006] A further objective of the present invention is to provide an orientable lighting appliance with a limited encumbrance, an extremely simple structure and with regulation and blocking elements which are totally or almost invisible for an external observer, and at the same time easy to activate.

[0007] These objectives according to the present invention are achieved by providing an orientable lighting appliance as specified in claim 1.

[0008] Further characteristics of the invention are indicated in the subsequent claims.

[0009] The characteristics and advantages of an orientable lighting appliance according to the present invention will appear more evident from the following illustrative and non-limiting description, referring to the enclosed schematic drawings in which:

figure 1 is a partial sectional side view of an orientable lighting appliance according to the invention, in a first operative position;

figure 2 is a partial sectional side view of an orientable lighting appliance of figure 1, in a second operative position;

figure 3 is a partial sectional side view of the fixing arm of the lighting appliance of figure 1; and

figure 4 is a partial sectional plan view of the fixing arm of figure 3.

[0010] With reference in particular to figures 1 and 2, these schematically show an orientable lighting appliance comprising a supporting arm 10 which supports and is constrained to at least one projector or lamp space 12 inside which at least one light source is envisaged (not shown).

[0011] The light source contained inside the lamp space 12 can consist for example of a lamp of the discharge type or a halogen lamp, charged at either the supply voltage or at a low voltage by the interposition of a suitable transformer.

[0012] In addition to the light source, the lamp space 12 contains in its interior all the elements necessary for the correct functioning of the lighting appliance, i.e. possible reflecting walls and/or shields, reactors, transformers and various electric components, whereas the supporting arm 10, inside which at least one groove 14 is envisaged (figure 4) for the passage of electric supply wires, is suitable for direct fixing to walls or ceilings or on a specific guiding rail or on an analogous structure by means of its connecting portion 16.

[0013] More specifically, the constraint between the lamp space 12 and the supporting arm 10 is provided by means of a hinge 18 around which the lamp space 12 can be rotated by a user in order to obtain the desired orientation. On the basis of a preferred embodiment, the lamp space 12 and the supporting arm 10 of the lighting appliance are produced in metal, for example in aluminum pressure die-casting, and in a thermoplastic material.

[0014] According to the present invention, the lighting appliance is equipped with a rod or lever 20 slidingly coupled with the arm 10 and constrainable thereto, hinged onto the lamp space 12 by means of a pin 22 having a rotation axis parallel and distanced with respect to the rotation axis of the hinge 18 which connects the lamp space 12 to its supporting arm 10.

[0015] On the free end of the rod 20, i.e. the opposite end to that on which the rotation pin 22 is situated, there is an opening 24 capable of receiving in its interior at least one block bead 26, or any other analogous fixing means, whose function is to allow the rod 20 to be constrained to the supporting arm 10 and consequently keep the lamp space 12 in a fixed position with respect to its arm 10 according to a desired tilting, as can be seen for example in the schematized drawings of figures 1 and 2.

[0016] More specifically, according to the preferred embodiment illustrated in the enclosed drawings, the rod 20 is situated inside the arm 10, in a position hidden from an outside observer, and its movement with respect to said arm 10 is made possible by the fact that the rod 20

itself slides inside a specific guide channel defined by one or more opposite guiding walls 28 and 30 situated in the body of the arm 10. On at least one of said guiding walls 28 and 30, in correspondence with the opening 24, there is therefore a threaded hole suitable for housing the block bead 26 so that its visible end can be operated manually or by means of a specific tool for effecting the blocking and unblocking of the rod 20 with respect to the arm 10 of the lighting appliance, as better described hereunder.

[0017] The opening 24 can be dimensioned so as to allow a predefined translation movement of the rod 20 inside the arm 10 thus allowing the projector 12 to rotate according to a pre-established width angle, for example up to 80°-90°. In short, the block bead 26 cooperates both with the wall 28, engaging and disengaging the rod 20 to select and maintain a certain position of the projector 12 which rotates around its own hinge 18, and also with the opening 24, to define a run-end with the two opposite ends of the opening 24, which defines the two extreme positions which the projector 12 and have with respect to the supporting arm 10.

[0018] The supporting arm 10 can also be equipped with a top or closing casing 32 which allows access and inspection of the rod 20, of the hinge 18 and rotation pin 22, in addition to the supply wires of the light source. If said top 32 is present, the bead 26 can also have the function of blocking the top 32 of the arm 10.

[0019] In particular, the top 32 has a suitable internal protuberance equipped with an opening (not shown), suitable for being inserted in a corresponding groove 34, envisaged on the arm 10 in correspondence with the wall 28, when the top itself 32 is assembled in position, so that the bead 26, by introducing it into the above opening, exerts the double function of being engaged with the rod 20 and blocking the top 32 on the supporting arm 10.

[0020] Alternatively, the supporting arm 10 can be produced in a single piece, whereas the rod 20 can also optionally be situated outside the arm 10, maintaining however the same functional characteristics.

[0021] From an operative point of view, in order to proceed with the orientation of the projector 12, once it has been verified that the block bead 26 is not completely fixed, the projector 12 is rotated around the hinge 18 which constrains it to the supporting arm 10. This rotation simultaneously also causes the rototranslation of the pin 22 with respect to the axis of the fixed hinge 18 and the consequent movement of the rod 20 inside the arm 10.

[0022] Once the desired position of the projector 12 has been reached, the rototranslation movement of the rod 20 is blocked by fixing the block bead 26 so that, thanks to the screwing force applied on the threadings of the hole situated on the arm 10, the block bead itself 26 compresses the rod 20 against the guiding wall 28, thus constraining said rod 20 to the body of the arm 10. In this way, the projector 12 is kept firmly in position preventing any accidental movement with respect to the supporting arm 10.

[0023] Vice versa, again by simply acting on the block bead 26, in this case by partially unscrewing it, the rod 20 is disengaged from the arm 10, thus allowing the projector 12 to be repositioned as desired.

[0024] It can therefore be seen that the orientable lighting appliance, which can be installed on walls or ceilings, according to the present invention, achieves the objectives indicated above, as it allows the projector to be blocked in position and rapidly unblocked to be re-oriented by simply acting on the block bead, easily accessible from the outside but not at all cumbersome and with an extremely reduced visible impact, which controls the position of the translatable rod with respect to the supporting arm.

[0025] The orientable lighting appliance according to the present invention thus conceived can undergo numerous modifications and variants, all included in the same innovative concept; furthermore all the details can be substituted by technically equivalent elements.

[0026] In practice, the materials used, as also the dimensions, can vary according to technical demands.

Claims

1. An orientable lighting appliance of the type comprising a supporting arm (10), suitable for installation on a fixed structure, which supports, by means of a hinge (18), at least one lamp space (12) inside which there is at least one light source, **characterized in that** it comprises at least one lever (20) slidingly coupled with the supporting arm (10) and constrainable thereto, said lever (20) being hinged on said lamp space (12) by means of a pin (22) having a parallel and distanced rotation axis with respect to the rotation axis of the hinge (18).

2. The lighting appliance according to claim 1, **characterized in that** said lever (20) is situated inside said supporting arm (10) and slides inside a specific guiding channel defined by one or more opposite guiding walls (28) and (30) situated in the body of said supporting arm (10).

3. The lighting appliance according to claim 2, **characterized in that** said lever (20) can be constrained to said supporting arm (10) by means of at least one threaded fixing element (26) inserted in a corresponding threaded hole situated in at least one of said one or more opposite guiding walls (28) and (30).

4. The lighting appliance according to claim 3, **characterized in that** on the end of said lever (20) opposite to that on which said pin (22) is situated, there is an opening (24) capable of housing in its interior said at least one threaded fixing element (26) to compress said lever (20) against said wall (28) and constrain

said lever (20) to said supporting arm (10).

5. The lighting appliance according to claim 3, **characterized in that** said at least one threaded fixing element (26) consists of a block bead which can be operated manually or by means of a specific tool.

6. The lighting appliance according to claim 2, **characterized in that** said supporting arm (10) is equipped with a top (32) which allows access to and the inspection of the lever (20), the hinge (18) and the pin (22), in addition to the supply wires of said light source.

7. The lighting appliance according to claim 6, **characterized in that** said top (32) has an internal protuberance equipped with an opening suitable for being inserted in a corresponding groove (34) envisaged on the supporting arm (10) in correspondence with the wall (28) when said top (32) is assembled in position, said threaded fixing element (26) being introduced into said opening to block the top (32) on said supporting arm (10).

8. The lighting appliance according to any of the claims from 1 to 7, **characterized in that** said lamp space (12), said supporting arm (10) and said lever (20) are made of metal.

9. The lighting appliance according to any of the claims from 1 to 7, **characterized in that** said lamp space (12), said supporting arm (10) and said lever (20) are made of a plastic material.

Fig. 1

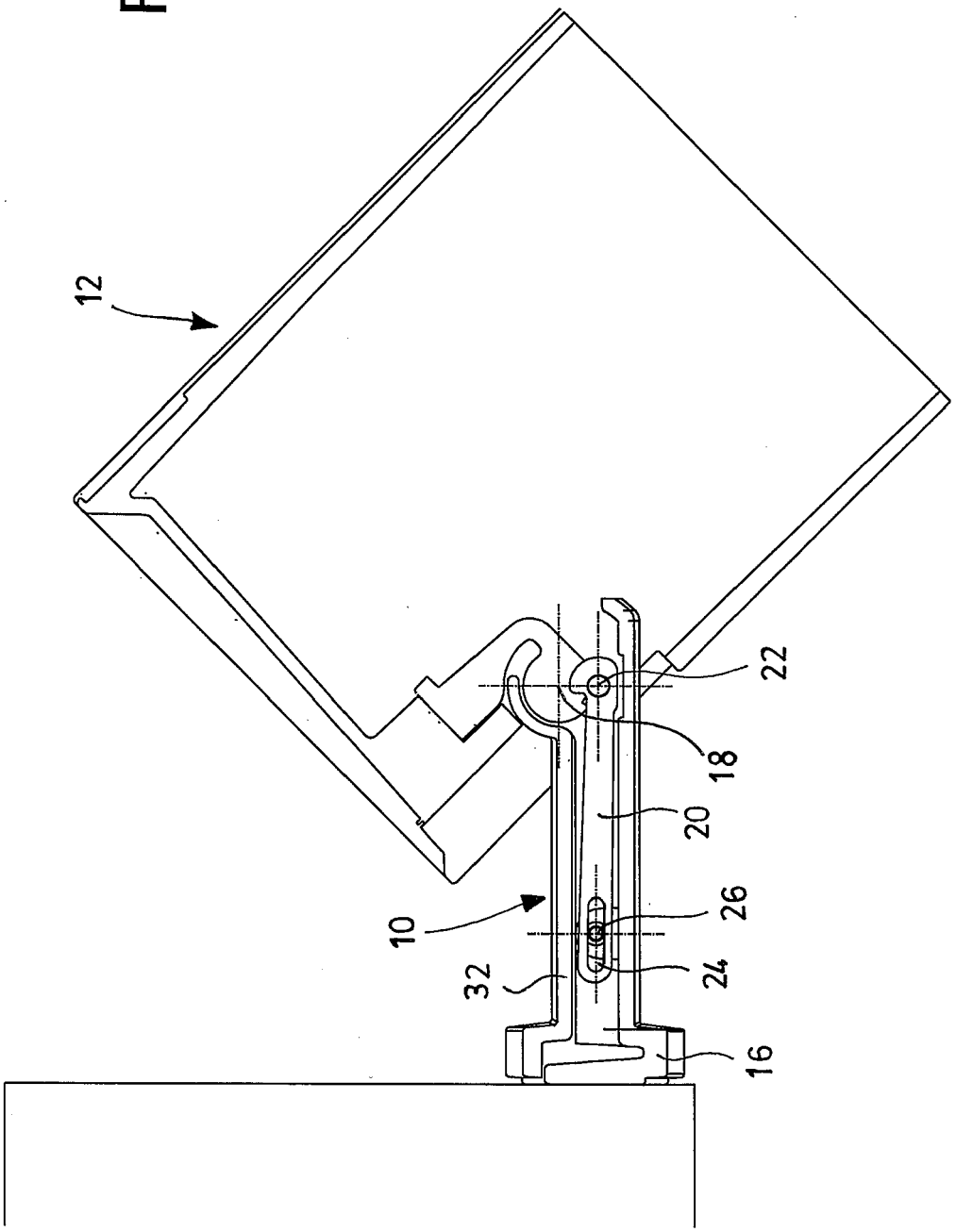

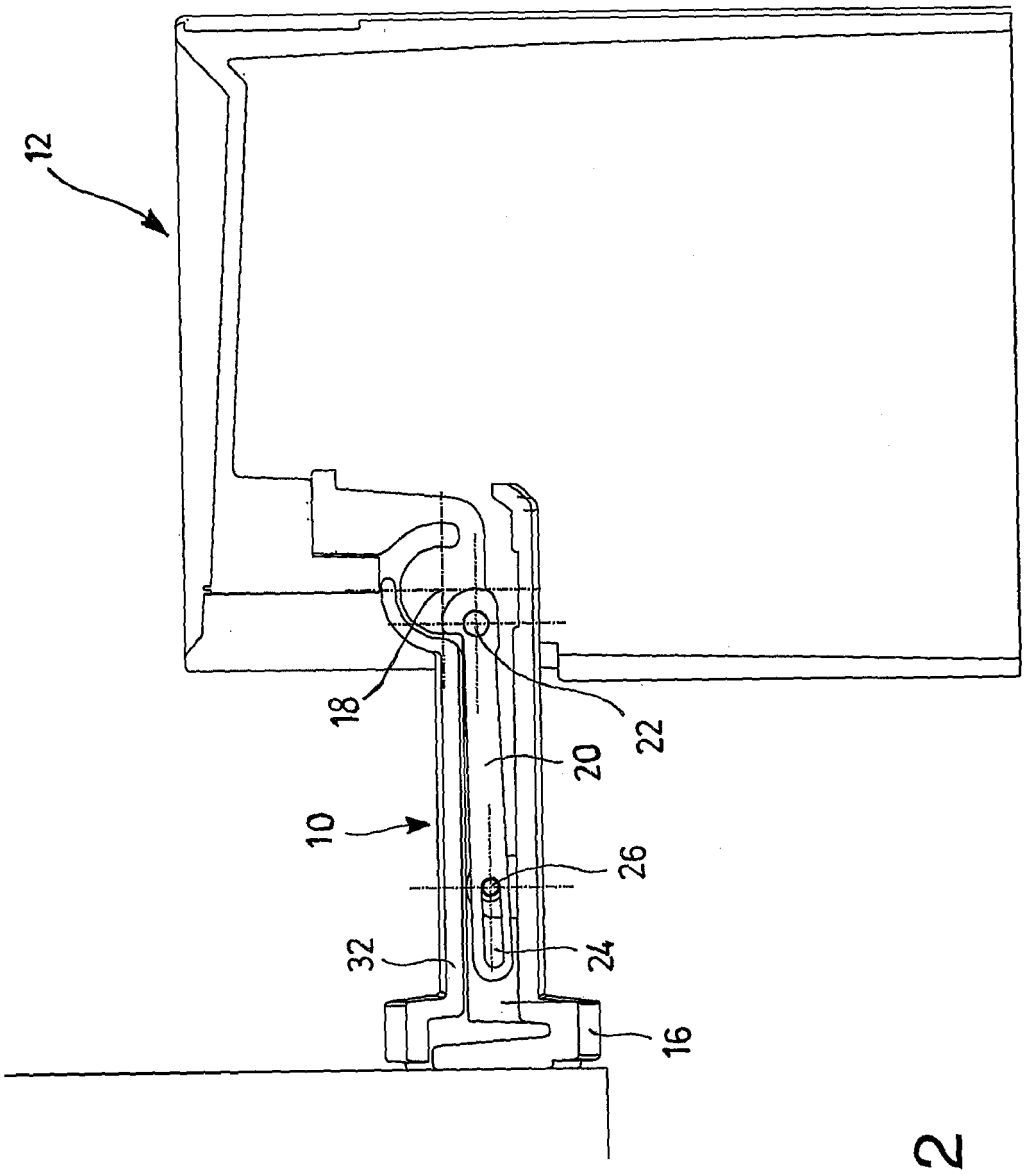

Fig. 2

Fig. 3

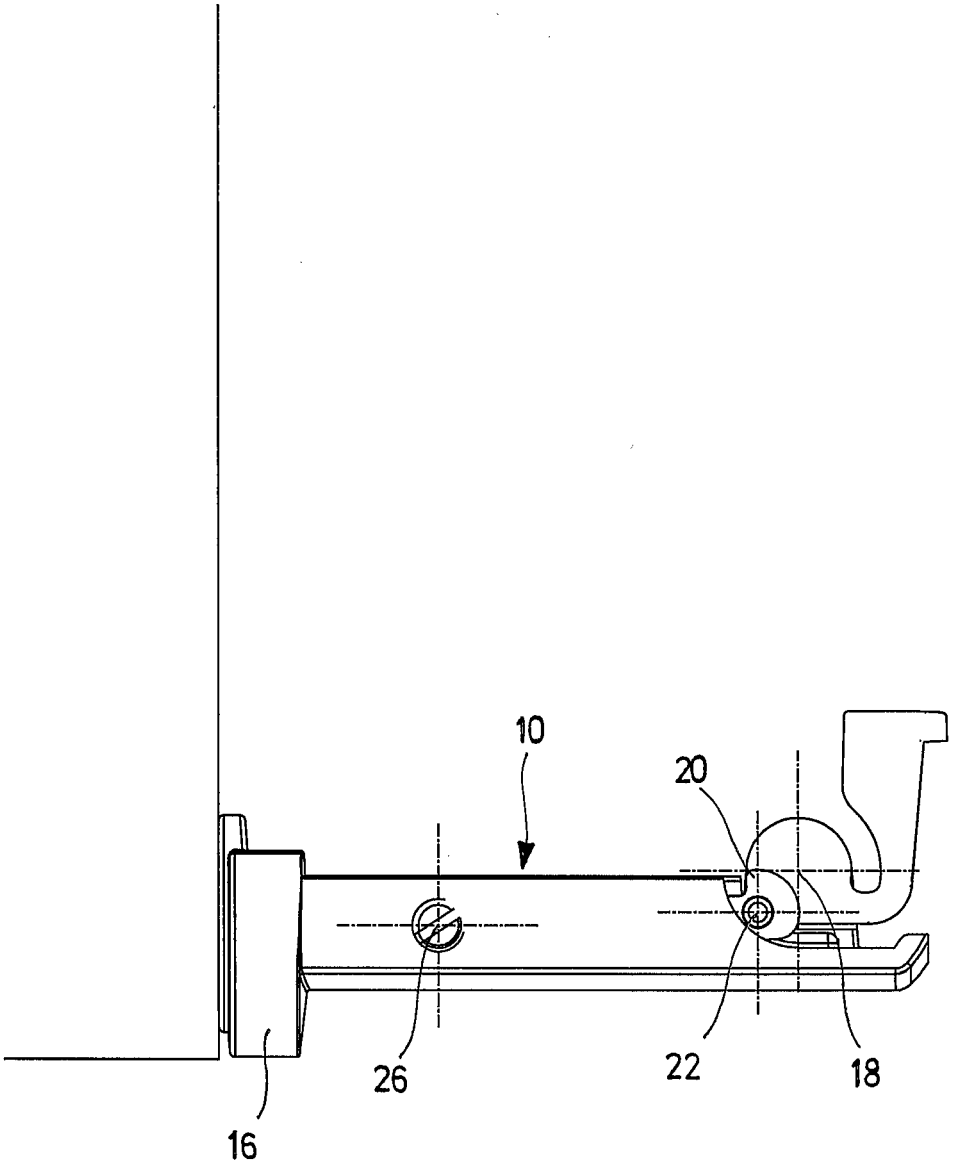

Fig. 4

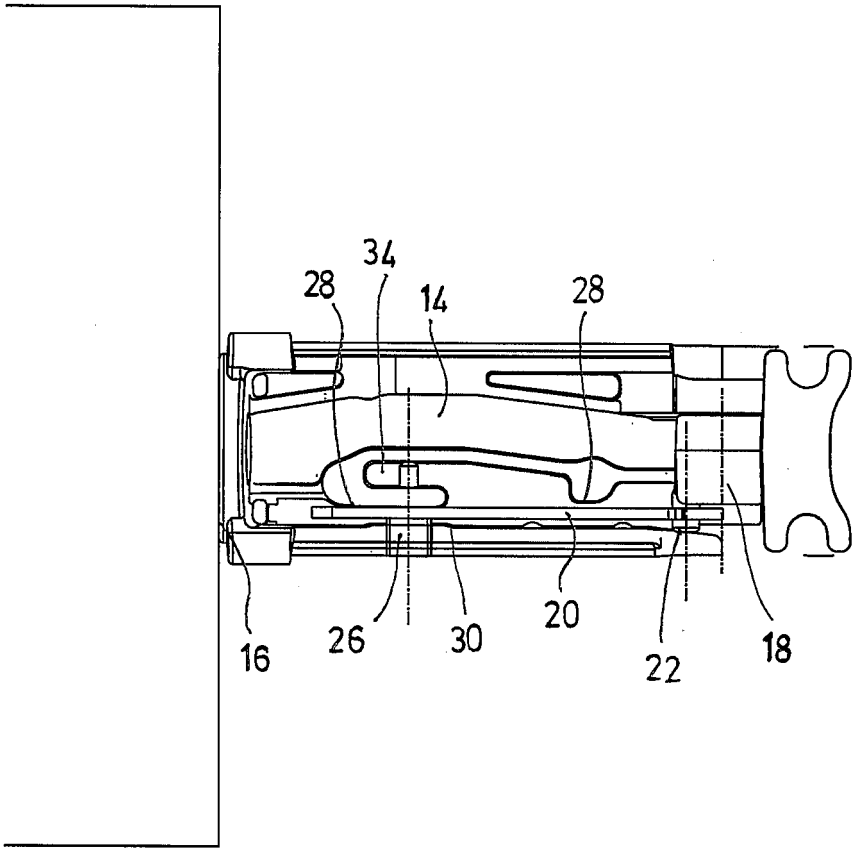

European Patent Office

EUROPEAN SEARCH REPORT

Application Number
EP 07 10 7321

DOCUMENTS CONSIDERED TO BE RELEVANT

Category	Citation of document with indication, where appropriate, of relevant passages	Relevant to claim	CLASSIFICATION OF THE APPLICATION (IPC)
A	EP 1 477 725 A (TRILUX LENZE GMBH & CO KG [DE]) 17 November 2004 (2004-11-17) * paragraph [0032] * * figures 1,2 * -----	1	INV. F21S8/00 F21V21/14 F21V21/30 F21V21/116
A	US 2003/227772 A1 (YOSHIDA MICHAEL K [US] ET AL) 11 December 2003 (2003-12-11) * paragraph [0023] * * paragraphs [0025], [0033], [0039] * * figure 1 * -----	1	
A	US 2003/076677 A1 (MOHACSI FERENC [US] ET AL) 24 April 2003 (2003-04-24) * figure 1 * -----	1	

TECHNICAL FIELDS SEARCHED (IPC)

F21S
F21V

The present search report has been drawn up for all claims

3

Place of search	Date of completion of the search	Examiner
The Hague	16 July 2007	Amerongen, Wim

CATEGORY OF CITED DOCUMENTS

X : particularly relevant if taken alone
Y : particularly relevant if combined with another document of the same category
A : technological background
O : non-written disclosure
P : intermediate document

T : theory or principle underlying the invention
E : earlier patent document, but published on, or after the filing date
D : document cited in the application
L : document cited for other reasons
.....
& : member of the same patent family, corresponding document

EPO FORM 1503 03.82 (P04C01)

ANNEX TO THE EUROPEAN SEARCH REPORT ON EUROPEAN PATENT APPLICATION NO. EP 07 10 7321

This annex lists the patent family members relating to the patent documents cited in the above-mentioned European search report.
The members are as contained in the European Patent Office EDP file on
The European Patent Office is in no way liable for these particulars which are merely given for the purpose of information.

16-07-2007

Patent document cited in search report	Publication date	Patent family member(s)	Publication date
EP 1477725 A	17-11-2004	DE 10321282 A1	23-12-2004
		US 2005057936 A1	17-03-2005
US 2003227772 A1	11-12-2003	US 2005117333 A1	02-06-2005
US 2003076677 A1	24-04-2003	NONE	

EPO FORM P0459

For more details about this annex : see Official Journal of the European Patent Office, No. 12/82