COMMONWEALTH OF AUSTRALIA

Form 1

Regulation 9 Patents Act 1952

616740

APPLICATION FOR A STANDARD PATENT

I, WILLIAM PICK, of Highway 15, R.R. #1, Carleton Place, Ontario, K7C 3P1, Canada, hereby apply for the grant of a standard patent for an invention entitled PLEATED CHARGED MEDIA AIR FILTER which is described in the accompanying complete specification.

The actual inventor of the said invention is: WILLIAM PICK

MY address for service is SMITH SHELSTON BEADLE, 207 Riversdale Road (P.O. Box 410), Hawthorn, Victoria, 3122 (Attorney Code SA)

Details of basic application:-

Number of Basic Application:	561231
Convention Country in which Basic Application was filed:	Canada
Date of Basic Application:	11 March 1988
ISO Code:	CA

DATED THIS 10th DAY OF March, 1989

SMITH SHELSTON BEADLE

Patent Attorneys for the Applicant

M007314 10/03/89

TO: The Commissioner of Patents

Our Ref: #2766 TNB:GD 31pic

FORM 7 & 8

AUSTRALIA
PATENTS ACT 1952

PATENT DECLARATION FORM
(CONVENTION OR NON-CONVENTION)

DECLARATION IN SUPPORT OF APPLICATION FOR A PATENT

Insert name of applicant.

In support of the application made by William Pick

Insert title of invention.

for a patent for an invention entitled: PLEATED CHARGED MEDIA AIR FILTER

Insert full name(s) and address(es) of person(s) making declaration. If applicant a company person must be authorised to make declaration.

I/We William Pick
Highway 15
R.R. #1 Carleton Place,
Ontario K7C 3P1 CANADA

do solemnly and sincerely declare as follows:

* 1. (a) I am/~~We are~~ the applicant(~~s~~) for the patent.

* Delete alternatives which do not apply

* OR (b) ~~I am authorized by the abovementioned applicant to make this declaration on its behalf.~~

* 2. (a) I am/~~We are~~ the actual inventor(~~s~~) of the invention.

Insert name(s) and address(es) of actual inventor(s).

* OR (b) _____

Insert details of entitlement to apply, e.g. Applicant is assignee of inventor(s)

is/are the actual inventor(s) of the invention and the facts upon which the applicant(s) is/are entitled to make the application are as follows:–

3. The basic application(s) as defined by Section 141 of the Act was/were made in the following country or countries on the following date(s) by the following applicant(s)

in CANADA on March 11, 1988
by William Pick
in _____ on _____ 19____
by _____
in _____ on _____ 19____
by _____
in _____ on _____ 19____
by _____

Delete 3 and 4 if application non-convention. Otherwise insert details of basic application(s).

4. The basic application(s) referred to in paragraph 3 of this Declaration was/were the first application(s) made in a Convention country in respect of the invention the subject of the application.

Place and date of Signature.

Declared at CARLETON PLACE this 2 day of MAR 19 84

W. Pick

Signature(s) of declarant(s).

NO ATTESTATION OR SEAL REQUIRED

SANDERCOCK, SMITH & BEADLE
P.O. Box 410, Hawthorn 3122, Australia
Telephone (+613) 819 2099
Telex: 34491 Sandpat
Telefax No. +61 3 819 1334 — Group 3

To: Commissioner of Patents, Australia

(12) PATENT ABRIDGMENT (11) Document No. AU-B-31234/89
(19) AUSTRALIAN PATENT OFFICE (10) Acceptance No. 616740

(54) Title
PLEATED CHARGED MEDIA AIR FILTER

International Patent Classification(s)
(51)[4] B01D 035/06 B01D 027/00

(21) Application No. : 31234/89 (22) Application Date : 10.03.89

(30) Priority Data

(31) Number	(32) Date	(33) Country
561231	11.03.88	CA CANADA

(43) Publication Date : 14.09.89

(44) Publication Date of Accepted Application : 07.11.91

(71) Applicant(s)
WILLIAM PICK

(72) Inventor(s)
WILLIAM PICK

(74) Attorney or Agent
CARTER SMITH & BEADLE , Qantas House, 2 Railway Parade, CAMBERWELL VIC 3124

(56) Prior Art Documents
US 3999964
US 4509958
US 3509696

(57) Claim

1. In an air filtration system of the charged media type, the combination of:

electrically conductive charging media having passageways therethrough to allow for the substantially free passage of air, said charging media being in one or more pairs with the media of each pair located in opposed parallel spaced-apart relationship;

a filter medium comprising a planar fibrous filter pad disposed between the charging media of each said pair;

electrically insulating spacers separating each said filter pad from at least one of said charging media adjacent said filter pad;

means for connecting the charging media of each said pair to respective poles of a high voltage power supply; and

frame means for supporting said charging media, said filter medium and said insulating spacers in their aforesaid relationship with one another within said air filtration system.

618740

COMPLETE SPECIFICATION

FOR OFFICE USE

Application Number: Class Int. Class
Lodged:

Complete Specification - Lodged:
Accepted:
Published:

Priority:

Related Art:

TO BE COMPLETED BY APPLICANT

Name of Applicant: WILLIAM PICK

Address of Applicant: Highway 15, R.R. #1, Carleton Place, Ontario K7C 3P1, Canada

Actual Inventor: WILLIAM PICK

Address for Service: SMITH SHELSTON BEADLE
207 Riversdale Road (P.O. Box 410)
Hawthorn, Victoria, Australia

Complete Specification for the invention entitled:

PLEATED CHARGED MEDIA AIR FILTER

The following statement is a full description of this invention, including the best method of performing it known to me:

Our Ref: #2766 TNB:GD 31pic

The present invention relates to electronic air filtration systems of the charged media type and in particular to a novel construction for charged media type air filters wherein contact between the fibrous filter pads and the charging media of the filter is minimized or eliminated, resulting in a dramatic increase in the efficiency of the filter. A number of air filter constructions are disclosed which are adaptable to use as disposable cartridge type filters, as well as a novel air filter cartridge frame and a desk top air filter unit.

BACKGROUND OF THE INVENTION/ PRIOR ART

Electronic air filtration systems of the charged media type are well known. Traditionally, these systems comprise a metallic screen charged with a high voltage/low amperage current which is sandwiched between a pair of fibrous filter pads and a pair of grounded metallic screens that cover each side of the filter sandwich. United States Patent No. 4,549,887 and Canadian Patent No. 1,175,754 describe charged media type air filters constructed in this fashion. Although these electronic air filters are much more efficient than passive air filtration systems, they have a feature in their design which can impair their efficiency. The close contact of the filter's charging screens with the fibrous filter pads can lead to a considerable voltage drop on the high voltage screen due to conduction across the filter media. This is especially true after the filter media has become soiled with dust and other airborne filtrates. A voltage drop of up to 60% of the input voltage has been observed on the charged screens of these filters. This voltage drop affects the strength of the electrostatic field created within the fibrous filter pads and thereby impairs the efficiency of the filter. The present invention overcomes this problem with a novel filter construction wherein contact between the fibrous filter media and at least one of the filter's charging screens is minimized or completely eliminated, enabling the maintenance of an electrostatic field of full or near full potential regardless of the contamination level of the filter media, thus providing an air filtration system of the charged media type which is dramatically more efficient than

those of the prior art. It has also been established that an efficient filter can be produced with only two charging screens and a single filter pad, providing a more economical filter construction.

SUMMARY OF THE INVENTION

The present invention provides an air filtration system of the charged media type comprising, in combination, electrically conductive charging media having passageways therethrough to allow for the substantially free passage of air, the charging media being in one or more pairs, the media of each pair located in opposed parallel spaced-apart relationship with a fibrous filter pad disposed between each adjacent pair of charging media. Conduction across the filter pads is reduced by either corrugating the filter pads or providing insulating spacers to separate each filter pad from one or both of the adjacent charging media. The charging media of the air filter are connected alternately to the respective poles of a high voltage power source to create an electrostatic field which polarizes the fibers of the filter media. An appropriately constructed frame supports the charging media, the filter media and the insulating spacers in the relation described within an air handling system.

The invention also provides an air filter cartridge frame comprising:

a shallow rectangular tray, having a bottom part which is electrically conductive and having passageways therethrough to allow for the substantially free passage of air, said bottom part of said tray provided on its inside surface with electrically insulative spacers located in a spaced-apart relationship, and said bottom part of said tray being electrically insulated from the sides of said tray; and

means for connecting the bottom of said tray to one pole of a high voltage power source.

DESCRIPTION OF THE DRAWINGS

The invention will now be described by way of example only and with reference to the following

AUSTRALIAN PATENT OFFICE

drawings wherein:

Fig. 1 is a perspective view of an air filter cartridge according to the invention with a portion cut away to show the corrugation of the filter media;

Fig. 2 is a cross sectional view of the filter cartridge of Fig. 1;

Fig. 3 is a cross sectional view of a variation of the filter cartridge of Fig. 1 wherein both the charging media and the filter media are corrugated to lend rigidity to the filter cartridge;

Fig. 4 is a perspective view of an alternate filter cartridge construction in accordance with the invention;

Fig. 5 is a cross sectional view of the filter cartridge of Fig. 4;

Fig. 6 is a perspective view of a filter construction according to the invention wherein a filter pad is disposed between two charging media and

insulated from one of the charging mediums by insulating spacers;

Fig. 7 shows a variation of the filter structure of Fig. 6 wherein the filter pad is insulated from both charging media;

Fig. 8 is a perspective view of a filter construction wherein a corrugated and a flat filter pad are combined in a single filter cartridge structure in accordance with the invention;

Fig. 9 is a perspective view of an economical filter cartridge wherein a charging medium is bonded to a filter pad;

Fig. 10 is a perspective view of a filter construction wherein two corrugated filter pads are combined in a single filter cartridge structure;

Fig. 11 shows a variation of the filter construction of Fig. 10 using two flat filter pads, each of which are separated from the central charging medium;

Fig. 12 is a schematic view of a filter cartridge of the invention in which the charging media is provided with latitudinal spikes which interleave the corrugations of a corrugated filter pad;

Fig. 13 shows a cross sectional view of a filter cartridge according to the invention wherein insulating spacers maintain a corrugated charging media and a corrugated filter pad in a spaced relation;

Fig. 14 is a cross sectional view of a variation of the filter cartridge of Fig. 13 wherein three charging media and two filter pads are combined to form a corrugated filter cartridge;

Fig. 15 shows an expanded schematic view of a filter cartridge and a filter cartridge frame according to the invention;

Fig. 16 is a plan view of a corner section of the filter cartridge frame of Fig. 15 showing the details of the high voltage power supply and a switch mechanism for deenergizing the high voltage charging media when a filter cartridge is removed from the frame;

Fig. 17 shows a side view and a plan view of the switch mechanism for the filter cartridge frame of Fig. 16;

Fig. 18 shows a perspective view of the switch mechanism of Fig. 16 and a portion of a filter frame provided with a hole for mounting the switch;

Fig. 19A is a plan view of a desk top filter unit according to the invention,

Fig. 19B is a side view of the desk top filter of Fig. 19A, and

Fig. 19C is a perspective view of the desk top filter unit of Fig. 19A;

Fig. 20 is a side view of the desk top filter unit of Fig. 19, a portion of the filter unit housing being cut away to illustrate the construction of the unit;

Fig. 21 is a plan view of the desk top filter unit of Fig. 19, a portion of the filter unit housing being cut away to illustrate the construction of the unit;

Fig. 22 is a perspective view of a prior art filter cartridge frame suitable for use with certain of the filter cartridges of the invention; and

Fig. 23 is a perspective view of a prior art high voltage power supply jack suitable for use with certain filter cartridges of the invention.

DETAILED DESCRIPTION OF THE INVENTION

Referring to the drawings, Fig. 1 shows a disposable filter cartridge according to the invention. The cartridge comprises an insulating frame 1 which houses a charging medium 2 on the top surface and a charging medium 3 on the bottom surface of the cartridge. Insulating frame 1 is preferably constructed of cardboard, although plastics or other non conductive materials are also suitable for this application. Charging media 2 and 3 are traditionally constructed of woven metallic screen, however, expanded metallic mesh has been established to be equally effective and more economical and any electrically conductive construction which provides for the free passage of air is suitable for the charging media. A corrugated fibrous filter pad 4 is disposed between the two charging media 2 and 3. Fibrous filter pad 4 is traditionally constructed of fiberglass but most dielectric fibers, including synthetic fibers such as polyester and blends of synthetic and natural fibers such as polyester and cotton have also been established to be effective filter mediums. A high voltage power jack 5 (see Fig. 23 for details) provides a connection between a high voltage power source (not illustrated) and the charging media 2 and 3 of the cartridge. The supply of power to the charging media can, of course, be arranged in any number of alternate ways well known in the art. The generally accepted practice is that charging medium 2 is grounded and that charging medium 3 is connected to a high voltage power of the order of 6 to 10 KV.

Fig. 2 shows a cross section of the filter cartridge of Fig. 1. The connection of charging media 2 and 3 with high voltage power jack 5 is also illustrated. It may be noted that high voltage medium 3 does not contact the cardboard frame 1 of the cartridge filter. This is to prevent arcing between the high voltage medium 3 and the frame 1 should the frame 1 become damp or soiled enough to become electrically conductive.

A variation of the filter cartridge of Fig. 2 is illustrated in Fig. 3. In this variation, the charging media 2 and 3 are latitudinally crimped to form partial corrugations which conform with the corrugations of the filter medium, lending rigidity to the filter cartridge. In this construction, the charging media are still adequately separated to significantly reduce conduction across a soiled filter pad while providing a more rugged replacement filter cartridge. The disposable filter cartridges of Figs. 1 and 3 are supported in an air handling system by the filter cartridge frame of Fig. 22, as will become apparent.

Fig. 4 and 5 show a novel construction for an efficient and very economical disposable filter cartridge. In Fig. 5 a single charging medium 6 and a single fibrous filter pad 7 are corrugated in unison and provided with a disposable frame 8. This disposable filter cartridge is supported in an air handling system by the filter cartridge frame shown in Figs. 15 and 16, the construction and operation of which will be explained in detail hereinafter. Charging medium 6 serves as the grounded medium of the filter and is provided with a metallic foil ground connection 9, the function of which will also be explained hereinafter.

Figs. 6 and 7 illustrate two more disposable filter constructions according to the invention. In the construction shown in Fig. 6, charging media 10 and 11 are disposed on each side of a fibrous filter pad 12. Spacers 13 maintain an air space 14 between charging media 11 and filter pad 12. Air space 14 prevents electrical conduction across the filter pad and the resulting loss of potential in the filter's electrostatic field. The embodiment shown in Fig. 7 employs insulating spacers 13 between fibrous filter pad 12 and both charging media 10 and 11. These filter constructions may also be provided with cardboard frames, not illustrated for clarity, and power supply jacks such as the one shown in Fig. 23, or some alternate method

known in the art of connecting the charging media to a high voltage power source. Filter cartridge constructions of this type are also supported in an air handling system by a filter cartridge frame such as the one shown in Fig. 22.

Another embodiment of a filter structure is shown in Fig. 8 wherein a corrugated filter pad 21 and a flat filter pad 22 are used in combination to provide a progressive filter which is more efficient than the filters heretofore described. The upstream filter pad (either pad 21 or 22) is preferably of a coarser mat than the downstream filter pad, however, this is not mandatory. The central charging media 17 is traditionally connected to the high voltage pole of high voltage power supply jack 23 and the outside charging media 18 are traditionally connected to the neutral or grounded pole of the power supply jack 23 for security against shock. It has been established, however, that for purposes of functionality, connecting charging medium 18 to the high voltage power source and charging medium 17 to the neutral pole is equally effective. Spacers 19 separate charging medium 18 from flat filter pad 20 to prevent electrical discharge across the pad. Cardboard frame 20 is preferably continuous across the top and bottom of the filter cartridge but is shown cut away for clarity.

In Fig. 9 an alternate economical filter cartridge construction is shown. This filter cartridge consists of a single charging medium 15 and a single fibrous filter pad 16. This filter cartridge construction is generally not provided with a cardboard frame. It may be supported in an air handling system by the filter cartridge frame illustrated in Fig. 15 or the desk top air filter unit illustrated in Figs. 19 through 21. Charging medium 15 of this filter cartridge serves as the grounded medium of an air filter. When adapted for use with the filter cartridge frame of Fig. 15, charging medium 15 is made to project slightly beyond the edges of the filter pad 16 so that it contacts the edge of the grounded metallic frame 51 of cartridge filter support frame 50, as will be explained in reference to Fig. 15.

Fig. 10 shows a further embodiment of a progressive filter cartridge similar to that shown in Fig. 8. In this embodiment, two corrugated filter pads 26 are disposed between a central charging medium 24 and two outside charging media 25. Again, the upstream filter pad is preferably a coarser mat

than the downstream filter pad although this is optional. The two corrugated filter pads 26 provide more filtering surface and, therefore, less air pressure drop across the filter than occurs with flat filter pads. As in the embodiment in Fig. 8, the charging media are connected to the respective poles of high voltage power supply jack 28 in the manner described. Cardboard frame 27 is also preferably continuous across the top and bottom of the filter cartridge although it is only partially depicted for clarity.

One further variation of the filter structures of Figs 9 and 10 is depicted in Fig. 11. In this embodiment of the invention, two flat fibrous filter pads 30 are disposed between two outside charging media 29. A central charging medium 28 is insulated from each filter pad 30 by opposing insulating spacers 31 to prevent electrical conduction across filter pads 30. A cardboard frame and high voltage power jack may also be provided in a manner previously described but are not illustrated for clarity. The filter cartridges shown in Figs. 9, 10, and 11 are supported in an air handling system using a cartridge filter frame similar to the one depicted in Fig. 22.

Fig. 12 depicts a further embodiment of a disposable filter cartridge wherein a corrugated filter pad 32 is provided with a charging medium 33 which is constructed with latitudinal spikes 34 which interleave the corrugations of the filter pad 32. In this embodiment, the charging medium 33 serves as a frame for the disposable cartridge and filter pad 32 is bonded to the charging medium 33 with an appropriate adhesive. This disposable cartridge is used in conjunction with the disposable cartridge filter frame of Fig. 15. It is inserted into filter cartridge frame 50 in an orientation upside down to the illustration of Fig. 12 so that the fibrous filter pad 32 is adjacent the insulating spacers 52 of cartridge filter frame 50 (Fig. 15). Because of interleaved spikes 34 of the charging medium 33, an enhanced electrostatic field is created within and around corrugated filter pad 32, rendering this embodiment particularly useful where very fine airborne contaminants must be removed by an air handling system. The upturned ends of charging medium 33 contact the metal frame 51 of the cartridge filter frame 50 (see Fig. 15) when installed in the cartridge filter frame, providing grounding contact for the charging medium 33.

Figs. 13 and 14 illustrate further embodiments of filter structures

according to the invention. The filter cartridge shown in cross section in Fig. 13 comprises two charging medium 35 and 36 and a fibrous filter pad 37. Filter pad 37 is separated from charging medium 35 by insulating spacers 38. Spacers 38 are affixed to the disposable cardboard frame 39 of the filter cartridge in the pattern illustrated to support the filter elements in the corrugated configuration shown. This structure provides an air filter with an increased surface area and, therefore, less air pressure drop across the filter than the traditional flat filter pads of the prior art. Charging medium 35 and 36 are connected to a high voltage power source in any order in a manner already described and well known in the art.

In Fig. 14, a similar disposable filter cartridge structure is shown which provides either a graduated filter or a double filter of the corrugated type. The outside surfaces of the corrugated filter pads are covered by charging medium 40 and 41 and a central charging medium 42 is also provided. Two fibrous filter pads 43 and 44 are disposed on either side of the central charging medium 42 and separated therefrom by opposing pairs of insulating spacers 45. Spacers 45 are attached to the cardboard filter cartridge frame 46 in the pattern illustrated to support the filter elements in the corrugated relation shown. The upstream filter pad, 43 or 44, is preferably of a coarser mat than the downstream filter pad, however, this is optional. Filter cartridge frame 46 is provided with a high voltage power jack 47 and connected to the charging medium as illustrated, the central charging medium 42 being preferably connected to the high voltage pole of power jack 47 for reasons of security against shock. The filter cartridge shown in Figs. 13 and 14 are supported in an air handling system using a filter cartridge frame similar to the frame of Fig. 22.

Fig. 15 shows a filter cartridge support frame according to the invention and an expanded view of the filter cartridge of Figs. 4 and 5. Filter cartridge support frame 50 comprises a metallic frame 51, a charging medium 53 attached to but insulated from frame 51 in a manner known in the art, and insulating spacers 52 disposed at intervals across the surface of the charging medium 53. A high voltage power supply is housed in box 54A which is attached to one end of the frame 51 in this embodiment. The high voltage pole of the power supply 54 (see Fig. 16) is connected via insulated electrode 55 to

charging medium 53. The neutral pole of the power supply 54 is connected to metallic frame 51. In use, power supply 54 is connected to an electrical power source and the charging medium 53 is thereby charged with a high voltage/low amperage direct current of the order of 6 to 10 KV. The charging voltage is preset depending on the type of cartridge to be used with filter cartridge frame 50. In general, the thicker the filter pad of a cartridge, and consequently the more distanced the charging medium 53 on the bottom of the filter cartridge support frame 50 and the charging medium 6 of the filter cartridge, the higher the voltage required on charging medium 53.

Fig. 16 shows in detail a portion of the cartridge filter support frame of Fig. 15, illustrating the construction of the power supply 54 and an optional media charging power interrupter switch 58. Power supply 54 is shielded in a protective box 54A which is supported by a projecting lip 56 which extends from a lower edge of frame 51. Box 54A is provided with an electrical power supply jack 59. The positive pole of jack 59 is connected to the positive input pole of power supply 54. The neutral pole of the jack 59 is connected to frame 51 or box 54A which is electrically continuous with the frame 51. The neutral pole of power supply 54 is connected to the connector end of a resilient switch member 58. Switch member 58 is retained in a hole 59 in frame 51 by a frictionally engaging mounting 57 (Figs. 17 and 18). Switch 58 is insulated from mounting 57. In use, when an appropriately sized filter cartridge is inserted into frame 51, the cardboard frame 8 of the filter cartridge (see Fig. 15) forces the resilient switch 58 into contact with the metallic frame member 51 of the cartridge filter support frame 50, completing the power supply circuit and providing high voltage power flow through electrode 55 to the charging media 53. Referring again to Fig. 15, grounding connector 9 on the cardboard filter frame 8 contacts filter frame 51, grounding charging media 6 and completing the circuitry required to create an electrostatic field in an around the filter pad 7. Switch 58 is optional and is not installed if a soft sided filter cartridge such as the filter cartridge of Fig. 9 is to be used in filter cartridge support frame 50.

Fig. 19 shows a novel desk top air filter unit, generally referred to by reference 59, in accordance with the invention. A two part housing with a top part 60 and a base part 61 encloses the other functional parts of the unit. A

standard power cord 72 supplies AC power to the unit. Referring now to Figs. 20 and 21, housings 60 and 61 are provided with louvres 70 and 71 respectively to permit the passage of air through the filter unit. A fan 62A is driven by a motor 62B which is powered by electric power cord 72. Air forced through the filter by fan 62A must pass through the electronic filter structure which comprises an inside high voltage charging medium 64 that is supported away from filter pad 66 by upright insulating supports 63. The grounded charging medium 65 is bonded to the filter pad 66 to form a disposable filter cartridge of the type shown in Fig. 9. Fins 67 which project from the inside surface of the housing part 60 serve to retain the cartridge filter formed by filter pad 66 and charging medium 65 in close proximity with upright supports 63 and charging medium 64. Grounded charging medium 65 contacts a grounding shoe 68 which is attached to the neutral line of power cord 72. High voltage power supply 69 is attached to the positive line of power cord 72. The high voltage power supply provides a high voltage current of the order of . to 10 KV to charging medium 64 which polarizes the fibers of the filter pad 66 and any particles in the air forced through the filter pad by fan 62A. The polarized air contaminants are thereby strongly attracted to the fibers of the filter pad and most of the contaminants cling to the pad even though they are small enough to pass through the pad without obstruction. When the desk top air filter unit requires servicing, power cord 72 is unplugged, and the upper housing part 60 is removed to expose the interior of the unit. The disposable filter cartridge which comprises charging medium 65 and filter pad 66 bonded together as a unit is removed and a fresh filter cartridge is inserted. Once the filter cartridge is replaced with a fresh cartridge, the upper housing part 60 is replaced and the unit is again ready for use.

Figs. 22 and 23 illustrate prior art devices used in conjunction with certain filter cartridge structures heretofore described. In Fig. 22 a filter cartridge support frame 80 is provided with a composite electrode which has a neutral pole 81 and a high voltage pole 82. Power is supplied to the high voltage electrode by a high voltage supply cable 83. Fig. 22 illustrates a cross sectional view of a high voltage power jack which is mounted on the filter cartridges so as to engage the high voltage electrode of the filter support frame 80 of Fig. 22 when the cartridges are inserted into the support

frame. High voltage jack 85 is mounted in an end of a cardboard filter cartridge frame 84 and connected via positive lead 86 and negative lead 87 (see Fig. 23) to the charging media of the filter cartridge as required by the construction of the filter cartridge.

The claims form part of the disclosure of this specification.

IXXXXXXX

The claims defining the invention are as follows:

1. In an air filtration system of the charged media type, the combination of:

electrically conductive charging media having passageways therethrough to allow for the substantially free passage of air, said charging media being in one or more pairs with the media of each pair located in opposed parallel spaced-apart relationship;

a filter medium comprising a planar fibrous filter pad disposed between the charging media of each said pair;

electrically insulating spacers separating each said filter pad from at least one of said charging media adjacent said filter pad;

means for connecting the charging media of each said pair to respective poles of a high voltage power supply; and

frame means for supporting said charging media, said filter medium and said insulating spacers in their aforesaid relationship with one another within said air filtration system.

2. In an air filtration system of the charged media type, the combination of:

electrically conductive charging media having passageways therethrough to allow for the substantially free passage of air, said charging media being in one or more pairs with the media of each pair located in opposed parallel spaced-apart relationship;

a filter medium comprising a fibrous filter pad disposed between the charging media of each said pair, said filter pad having corrugations and contacting said charging media only at the crest regions of said corrugations;

means for connecting the charging media of each said pair to the respective poles of a high voltage power supply; and

frame means for supporting said charging media and said filter medium in their aforesaid relationship with one another within said air filtration system.

3. The combination defined in claim 1, wherein said combination is in the form of a disposable filter cartridge wherein one charging medium of each pair of charging media is bonded frictionally or adhesively to the filter pad disposed between said media.

4. The combination defined in claim 2, wherein said combination is in the

form of a disposable filter cartridge wherein at least one charging medium of each pair of charging media is bonded frictionally or adhesively to the crests of the corrugated filter pad disposed between said media.

5. A disposable filter cartridge as defined in claim 4, wherein one or each charging medium bonded to the corrugated filter pad is complementarily corrugated with said filter pad, whereby said bond between said charging medium and said filter pad is substantially continuous.

6. A disposable filter cartridge as defined in claim 4, wherein the charging medium bonded to the corrugated filter pad is provided with latitudinal spikes which interleave the corrugations of said filter pad, said charging medium contacting only the crest regions of the corrugations of said filter pad, said interleaving spikes of the charging medium being spaced from said corrugations.

7. In an air filtration system of the charged media type, the combination of:

electrically conductive charging media having passageways therethrough to allow for the substantially free passage of air, said charging media being in one or more pairs with the media of each pair complementarily corrugated and located in opposed spaced-apart relationship;

a filter medium comprising a fibrous filter pad complementarily corrugated with said charging media and disposed between the media of each said pair of charging media;

electrically insulating spacers separating said filter pad from at least one of said charging media adjacent said filter pad;

means for connecting the charging media of each said pair to respective poles of a high voltage power supply; and

frame means for supporting said charging media, said filter media and said insulating spacers in their aforesaid relationship with one another within said air filtration system.

8. The combination of claim 7, in the form of a disposable filter cartridge wherein one charging media of each pair is bonded frictionally or adhesively to said filter pad disposed between said media.

9. A disposable filter cartridge as in claims 3, 4 or 5, further comprising a supporting, disposable frame.

10. A disposable filter cartridge as in claims 6 or 8, further comprising a supporting, disposable frame.

11. An air filter cartridge frame comprising:

a shallow rectangular tray, having a bottom part which is electrically conductive and having passageways therethrough to allow for the substantially free passage of air, said bottom part of said tray provided on its inside surface with electrically insulative spacers ' .ated in a spaced-apart relationship, and said bottom part of said tray being electrically insulated from the sides of said tray; and

means for connecting the bottom of said tray to one pole of a high voltage power source.

12. An air filter cartridge frame as in claim 12, comprising:

a shallow rectangular metal tray, having a bottom part comprising a metallic screen or expanded mesh insulated from the sides of said tray, said tray being further provided with a projecting lip along one side;

a high voltage power supply device affixed to said projecting lip of said tray and housed within a protective shield;

an electrical power supply jack for connecting said high voltage power supply device to an electrical power source, a positive pole of said jack being connected to a positive input pole of said high voltage power supply device and a neutral pole of said jack being connected to a neutral input pole of said high voltage power supply device and to a side of said tray;

electrical connection means provided between a high voltage output pole of said high voltage power supply device and the bottom part of said tray, said connection means being insulated from the sides of said tray.

13. An air filter cartridge frame as in claim 12, further comprising an electrical switch means comprising a resilient conductor means and a conductor mounting means, said conductor mounting means frictionally engaging a ho'e in a side of said tray, said conductor means being substantially L-shaped and insulated from said mounting means, said conductor means being connected on its one end to said neutral input pole of said high voltage power supply, its free end being normally parallel to and closely spaced from a side of said tray so that on insertion of a suitably sized filter cartridge into said tray, said free end of said conductor is forced into contact with said side of said tray and on removal of said filter cartridge, said conductor returns to its normally parallel, spaced relationship with said side of said tray.

14. A desk top electronic air filter unit of the charged media type comprising:

a housing divided into at least two parts, said parts being disengageable to provide access to the interior of said housing, said housing being provided with air intake and exhaust passageways to permit the passage of air therethrough;

fan means disposed within said housing to force the movement of air therethrough;

motor means drivably connected to said fan means;

electronic air filter means disposed between the air intake and exhaust passages in said housing so that substantially all air which passes through said housing passes through said air filter means, said air filter means comprising first and second electrically conductive charging media with a filter pad therebetween, said first charging medium being spaced from said filter pad by electrically insulating support means; and

a high voltage power supply, the high voltage output pole of which is connected to said first charging medium and neutral pole of which is connected to said second charging medium of said cartridge filter.

15. A desk top air filter unit as in claim 15, wherein the filter pad and the second charging medium are adhesively or frictionally bonded together to form a disposable filter cartridge.

16. An air filtration system substantially as hereinbefore described with reference to the accompanying drawings.

17. A disposable filter cartridge substantially as hereinbefore described with reference to the accompanying drawings.

18. An air filter cartridge frame substantially as hereinbefore described with reference to the accompanying drawings.

19. A desk top electronic air filter unit substantially as hereinbefore described with reference to the accompanying drawings.

20. An air filtration system of the charged media type, comprising electrically conductive charging media having passageways therethrough to allow for the substantially free passage of air, said charging media being in one or more pairs with the media of each pair located in opposed substantially parallel spaced-apart relationship, a filter medium comprising a fibrous filter member disposed between the charging media of each pair, means for minimizing contact between said filter member and at least one of the adjacent charging media, means for connecting the charging media of each pair to respective poles of a high voltage power supply, and frame means for supporting said charging media and said filter member in their aforesaid relationship with one another within said air filtration system.

DATED this 30 July 1991

CARTER SMITH & BEADLE

Fellows Institute of Patent Attorneys of Australia

Patent Attorneys for the Applicant:

WILLIAM PICK

AUSTRALIAN PATENT OFFICE

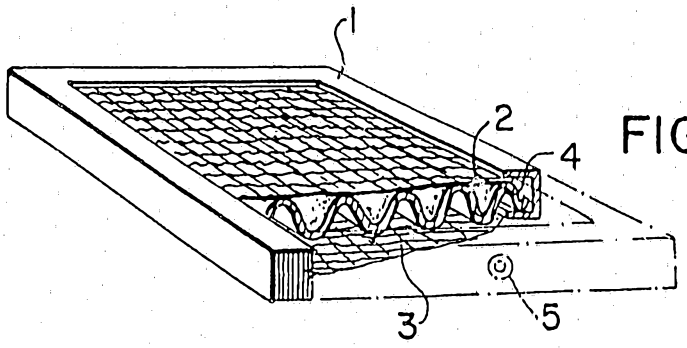

FIG.1

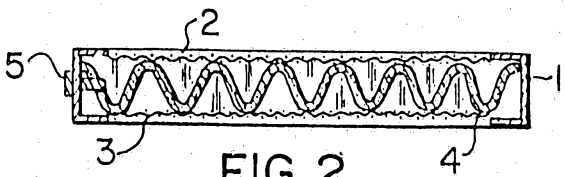

FIG.2

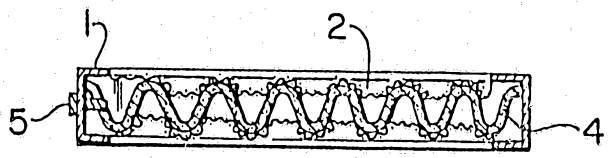

FIG.3

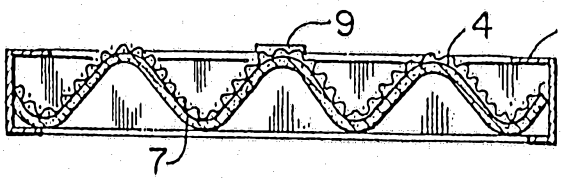

FIG.5

FIG.4

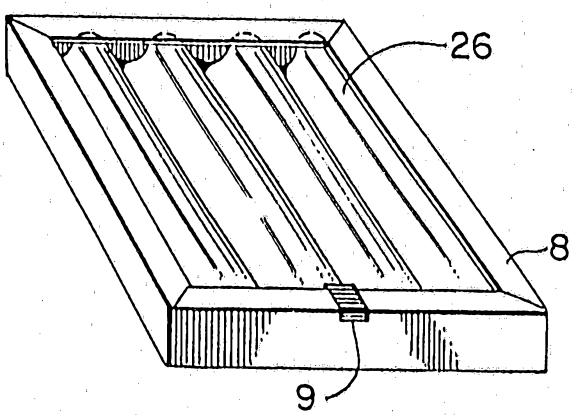

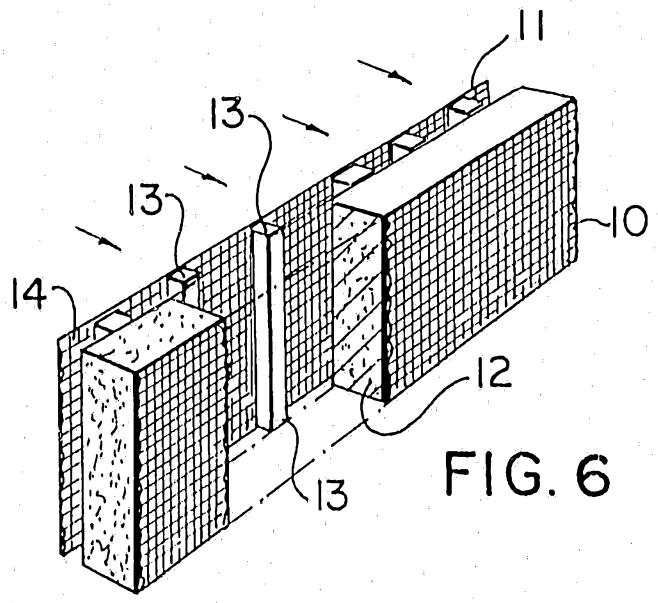

FIG. 6

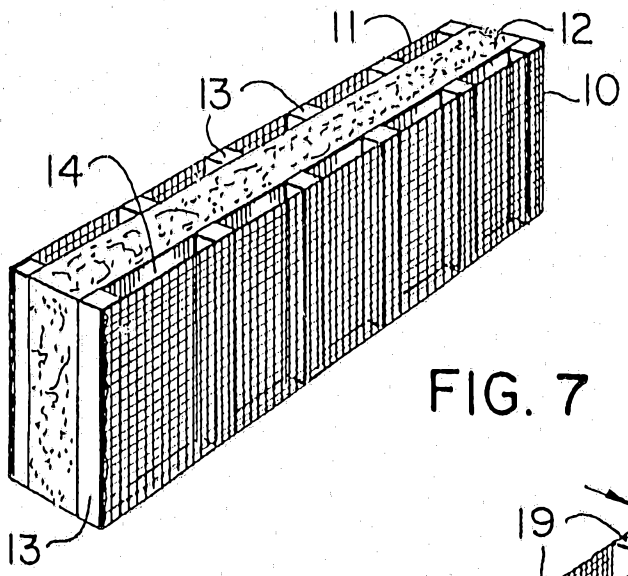

FIG. 7

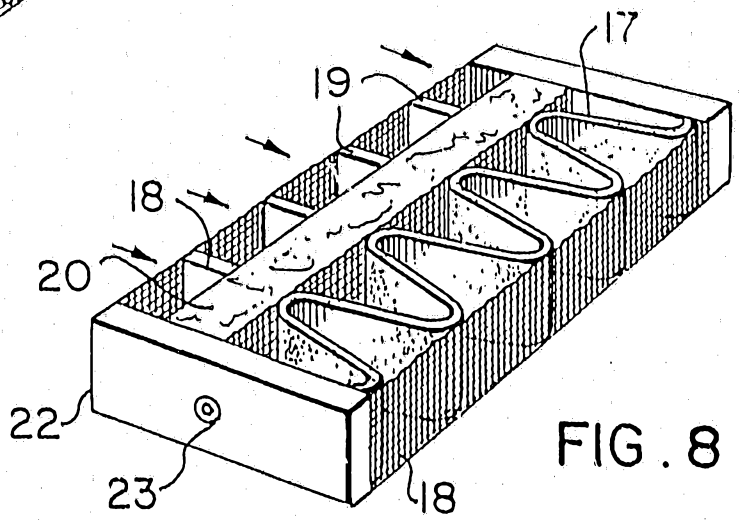

FIG. 8

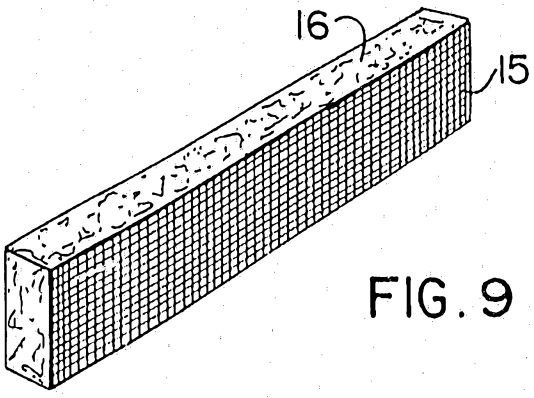

FIG. 9

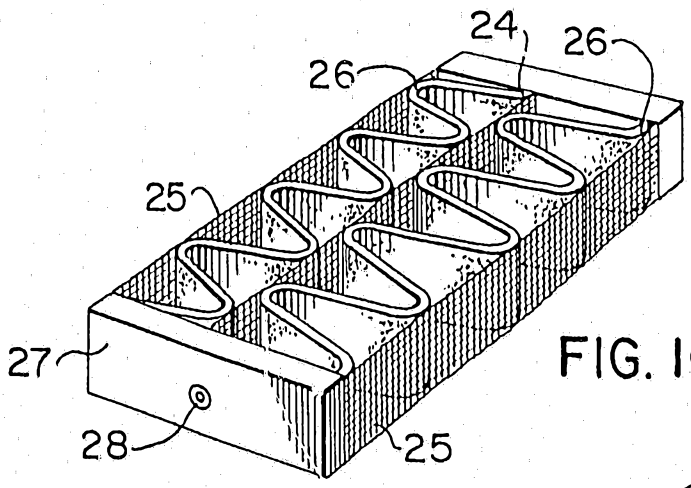

FIG. 10

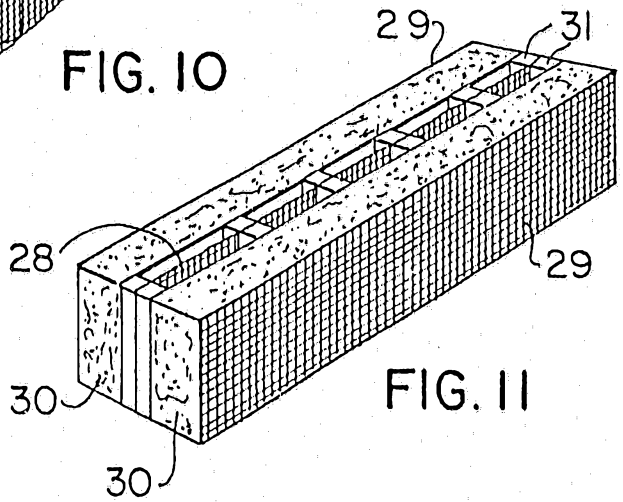

FIG. 11

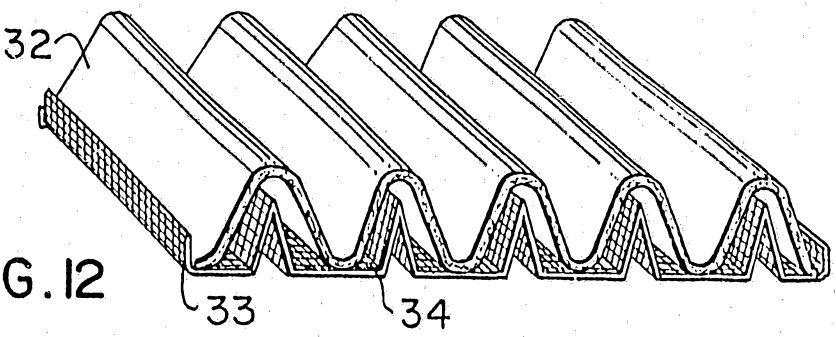

FIG. 12

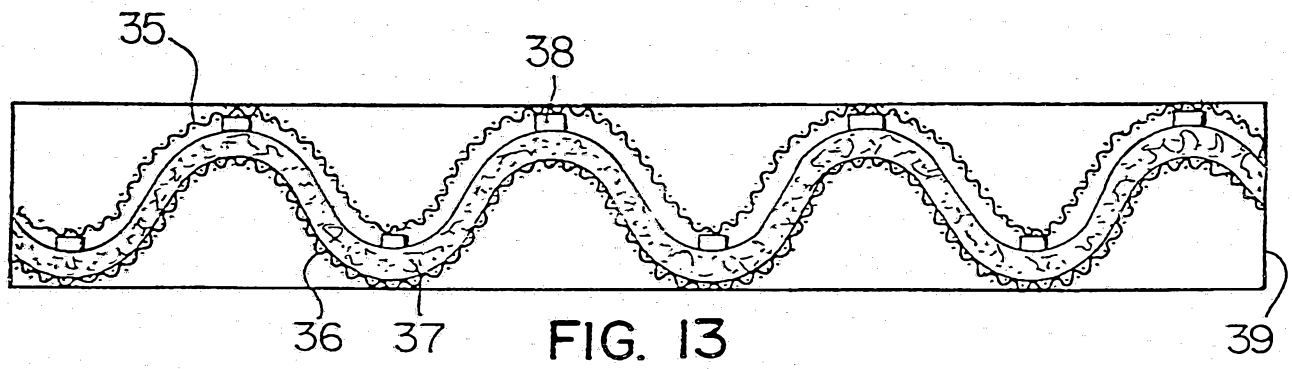

FIG. 13

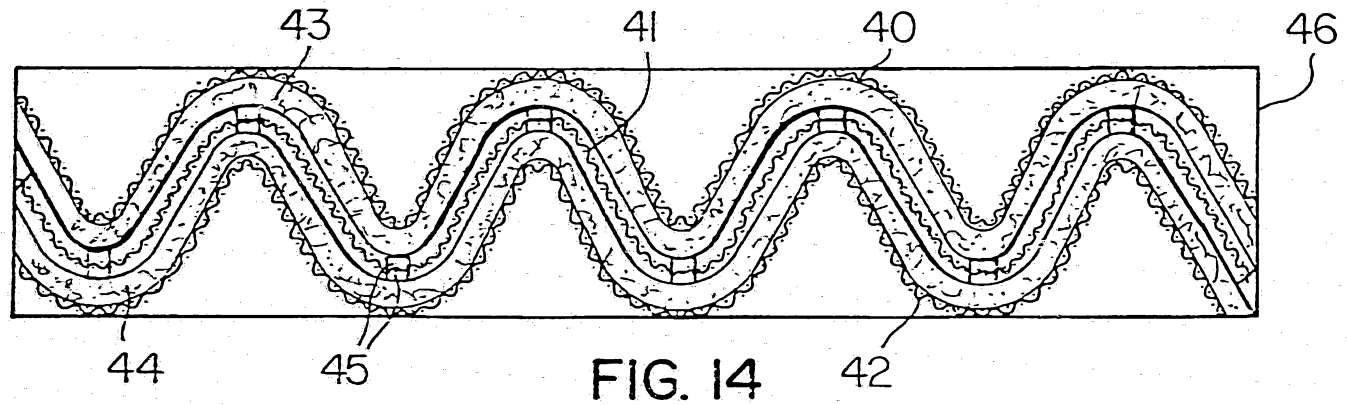

FIG. 14

31234/89

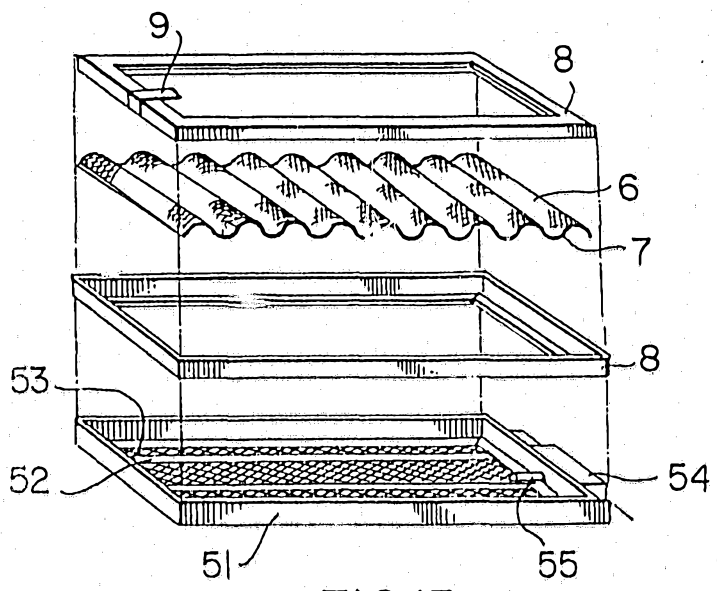

FIG.15

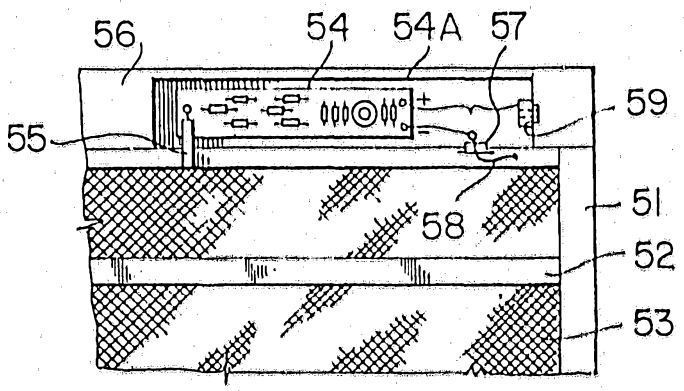

FIG.16

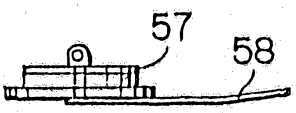

FIG.17

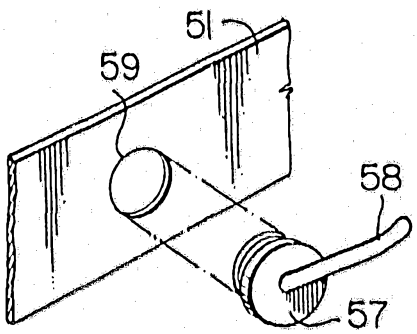

FIG.18

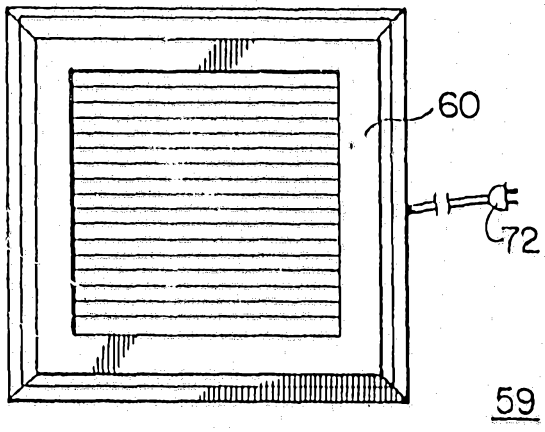

FIG. 19A

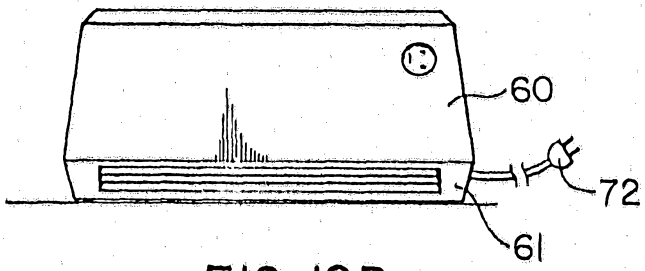

FIG. 19B

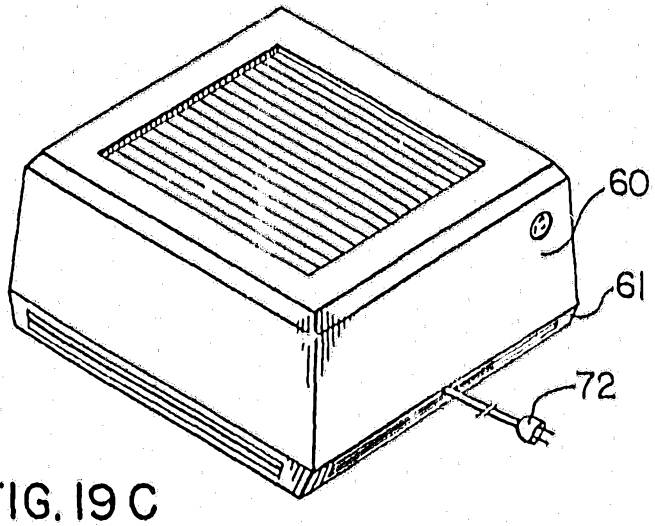

FIG. 19C

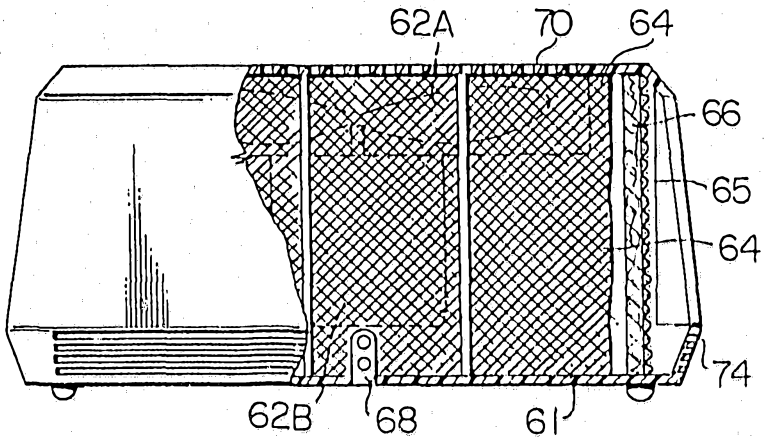

FIG.20

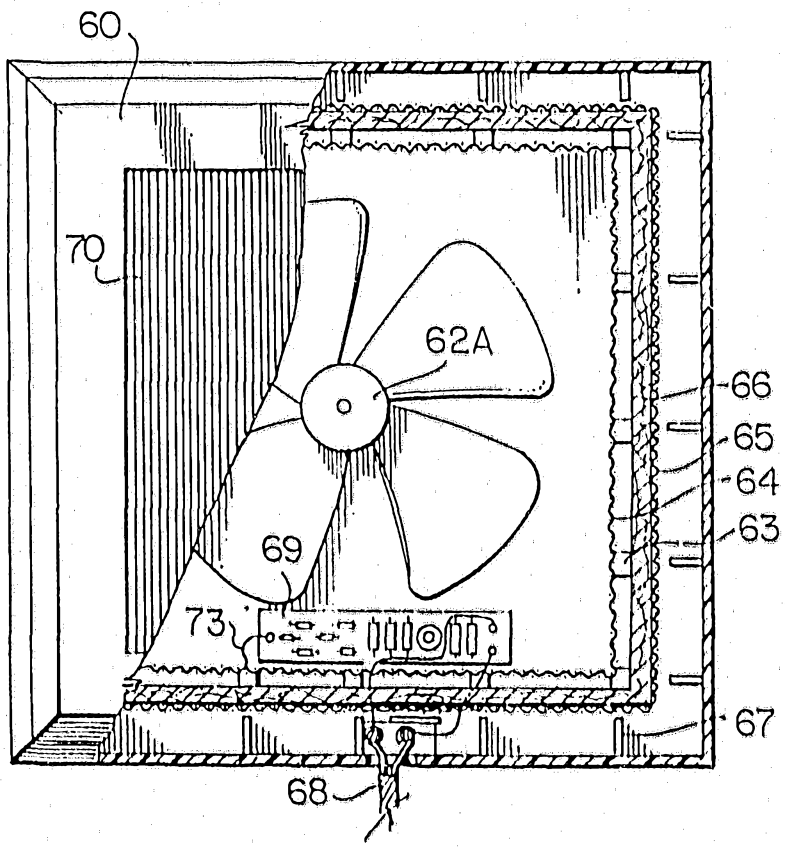

FIG.21

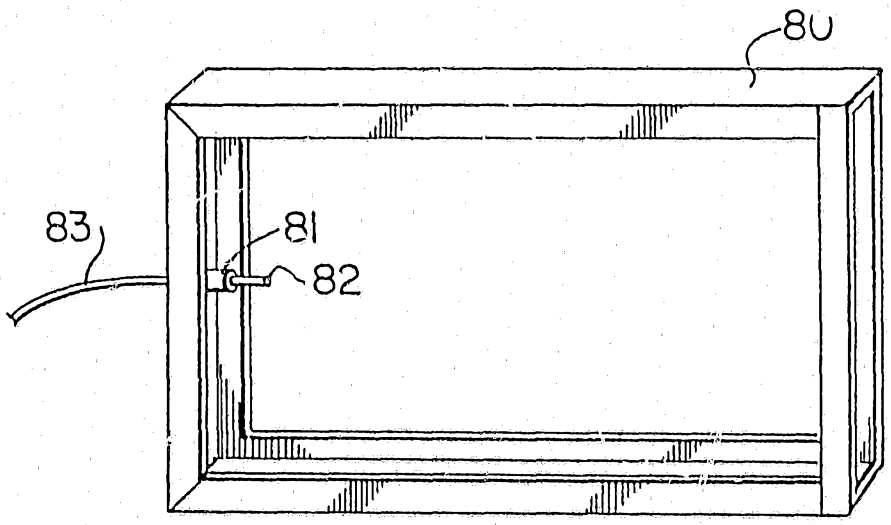

FIG. 22

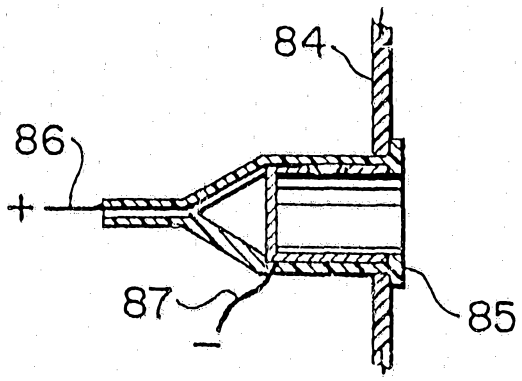

FIG. 23