US00D376948S

United States Patent [19]

Sullins et al.

[11] Patent Number: Des. 376,948

[45] Date of Patent: **Dec. 31, 1996

[54] **COMBINED LAP PILLOW AND BOOK SUPPORT**

[75] Inventors: **Patrick H. Sullins**; **Don M. Jennings**, both of Arlington, Tex.

[73] Assignee: **Creative Manufacturing, Inc.**, Arlington, Tex.

[**] Term: **14 Years**

[21] Appl. No.: **38,660**

[22] Filed: **May 11, 1995**

[52] **U.S. Cl.** **D6/601**; D6/419; D6/596

[58] **Field of Search** D6/595, 596, 601, D6/406, 419; 297/452.26, 452.21, 452.23; 108/43, 42; 5/639, 640, 636, 630; 248/105, 441.1, 444, 451

[56] **References Cited**

U.S. PATENT DOCUMENTS

D. 346,701	5/1994	Colley, III	D6/330
D. 358,270	5/1995	Diamond	D6/601
D. 362,565	9/1995	Tubbs et al.	D6/406
1,928,806	10/1933	Barcalo	5/636
2,955,972	10/1960	Wintermute et al.	156/79
4,052,944	10/1977	Jennings	108/43
5,090,334	2/1992	Sutton	108/43

OTHER PUBLICATIONS

Heritage Products Advertisement, Book Buddy.

Levenger Tools For Serious Readers, Early Summer 1993, Readers Pillow, #AF050, p. 3.

Primary Examiner—Lisa P. Lichtenstein

Attorney, Agent, or Firm—Sidley & Austin

[57] **CLAIM**

The ornamental design for a combined lap pillow and book support, as shown and described.

DESCRIPTION

FIG. **1** is a perspective view of our original and ornamental design for a combined lap pillow and book support;

FIG. **2** is a top view of thereof;

FIG. **3** is a left side view thereof, a right side view being a mirror image of this view;

FIG. **4** is a rear view thereof;

FIG. **5** is a front view thereof; and,

FIG. **6** is a bottom view thereof.

1 Claim, 3 Drawing Sheets

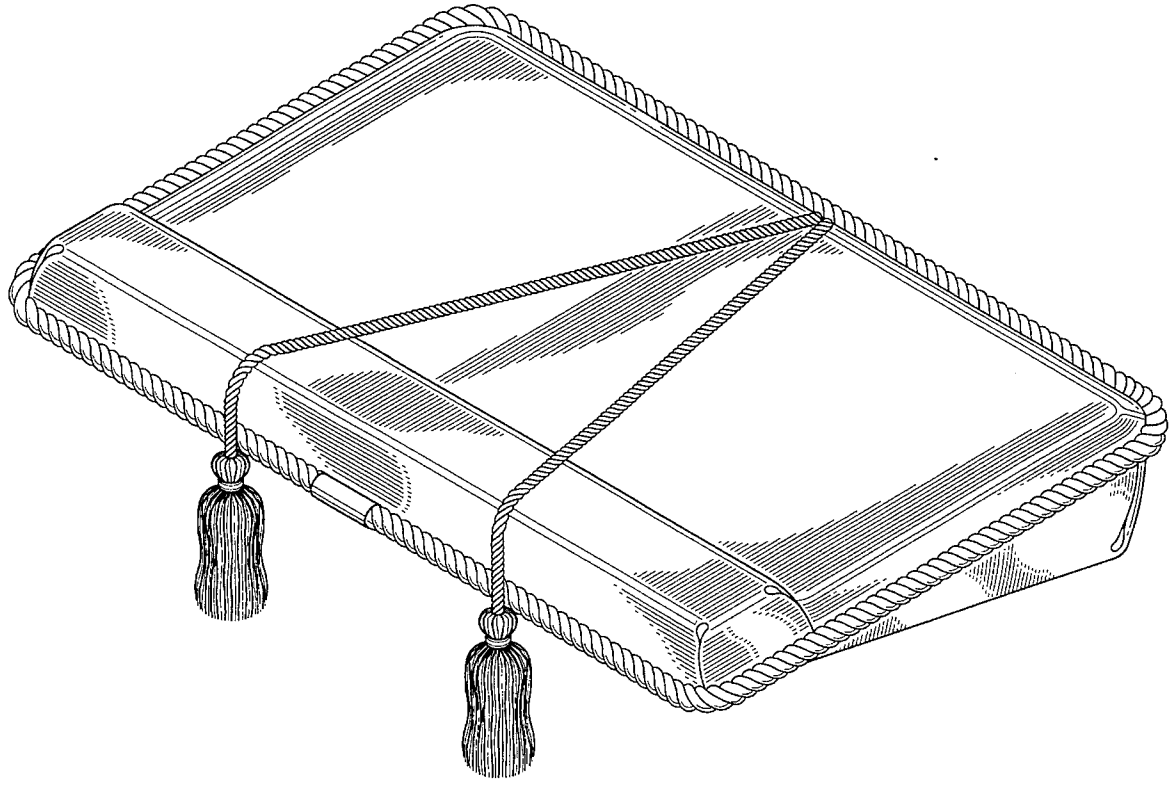

FIG. 1

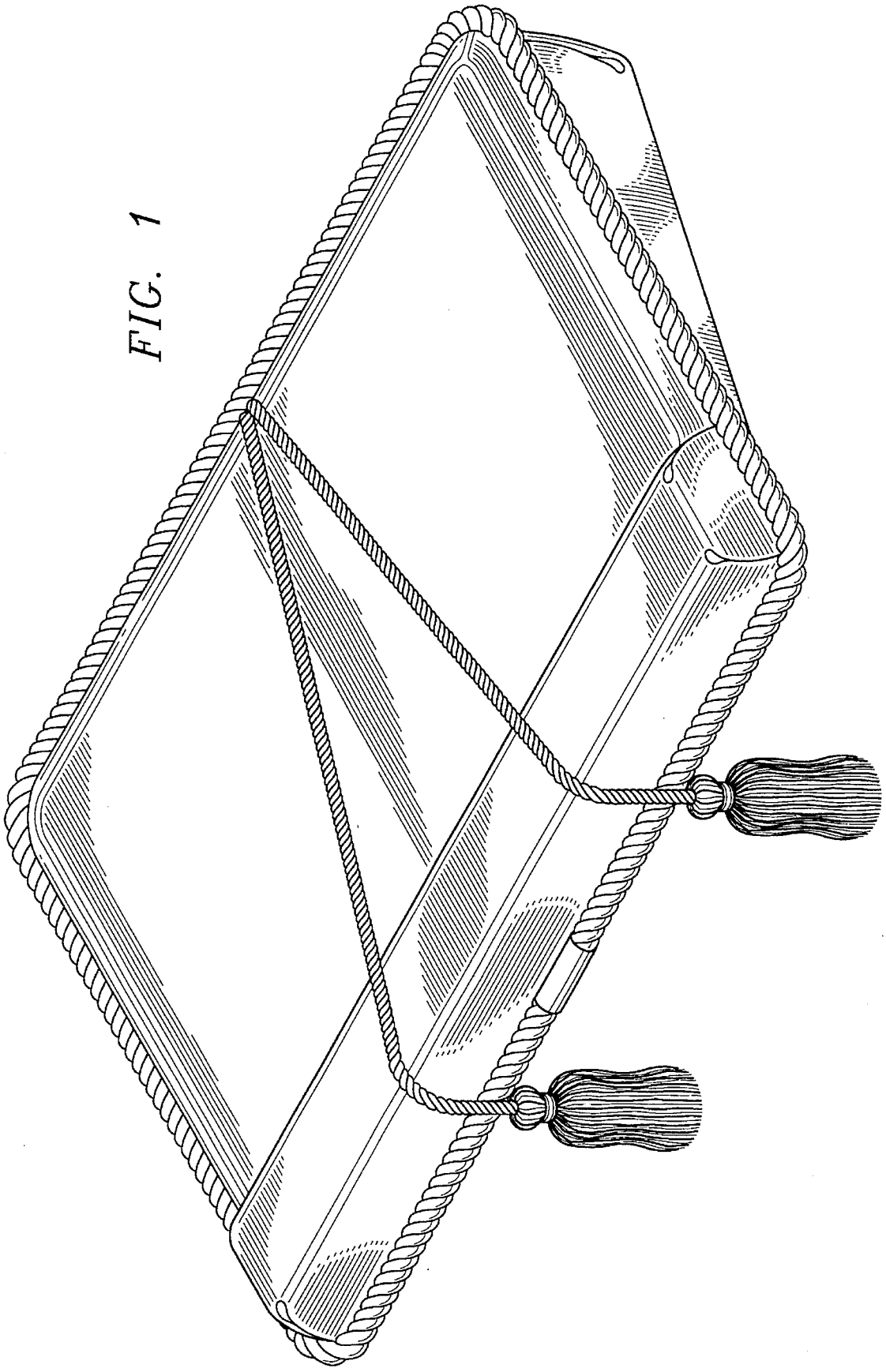

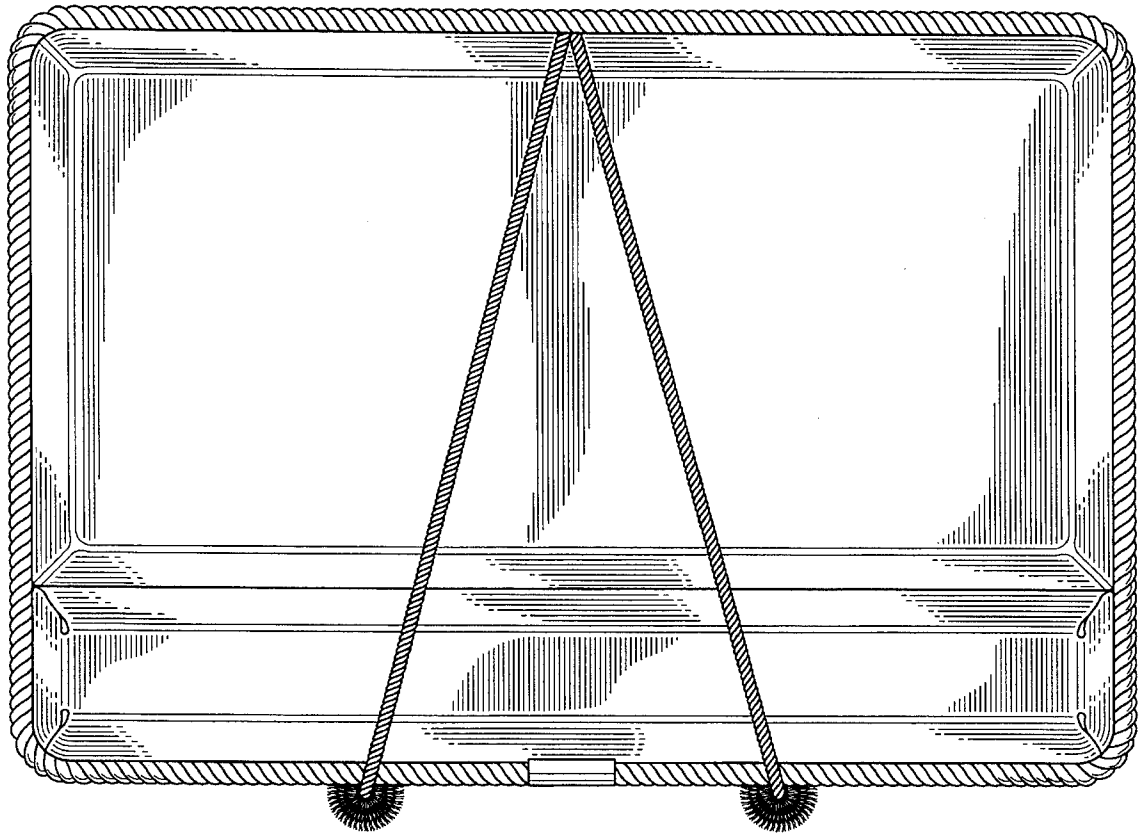

FIG. 2

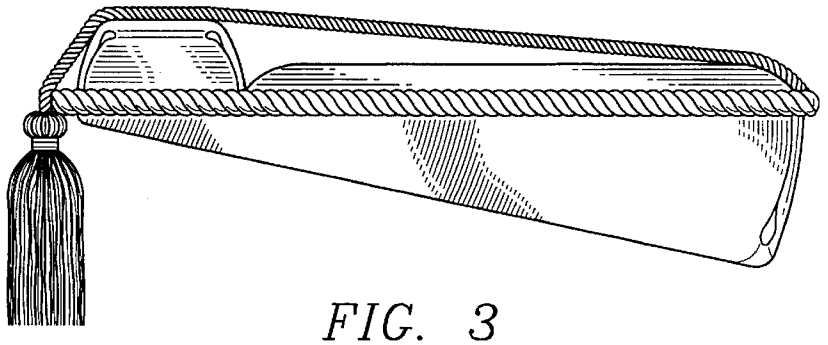

FIG. 3

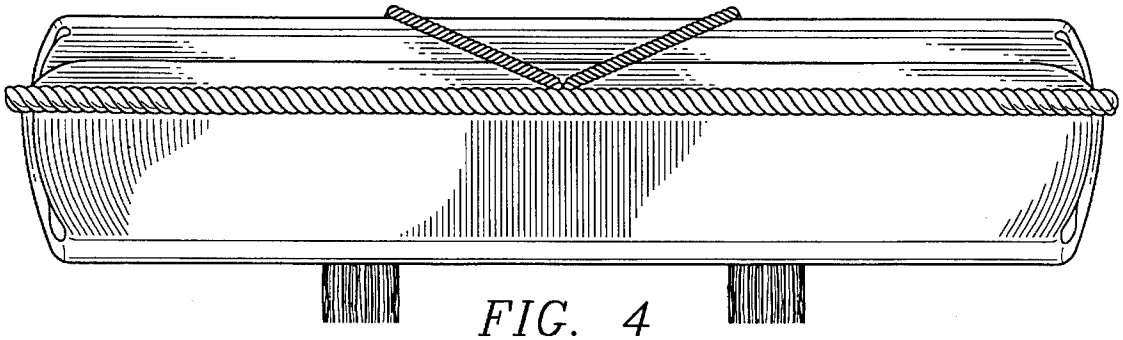

FIG. 4

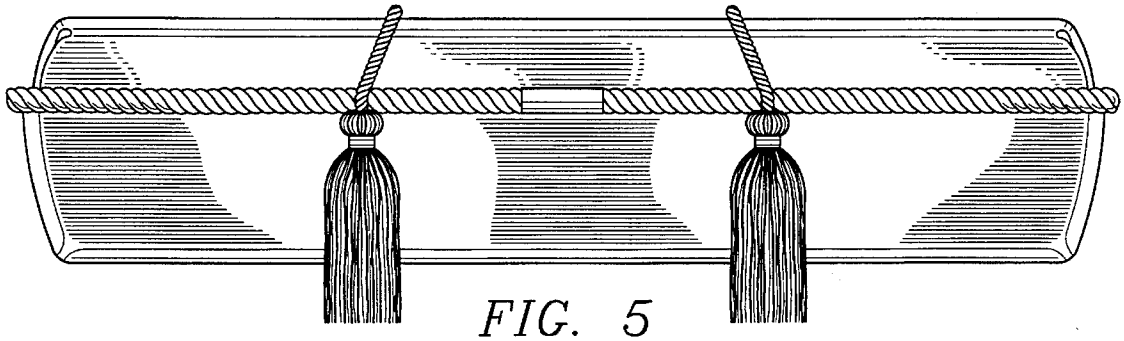

FIG. 5

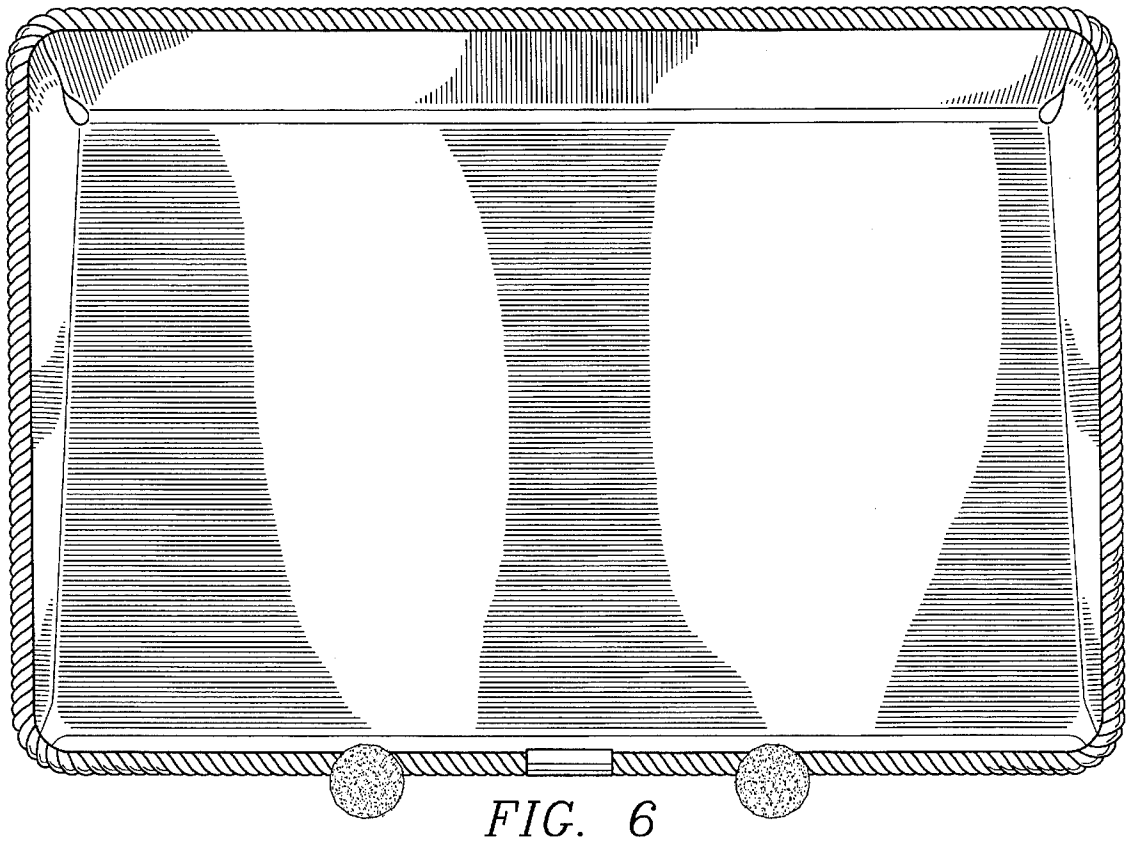

FIG. 6