(12) INTERNATIONAL APPLICATION PUBLISHED UNDER THE PATENT COOPERATION TREATY (PCT)

(19) World Intellectual Property Organization
International Bureau

(43) International Publication Date
19 December 2024 (19.12.2024)

WIPO | PCT

(10) International Publication Number
WO 2024/259037 A3

(51) International Patent Classification:
C23C 4/06 (2016.01) *H01M 4/36* (2006.01)
C23C 4/12 (2016.01) *H01M 10/056* (2010.01)
H01M 4/04 (2006.01) *H01M 4/62* (2006.01)
H01M 4/139 (2010.01)

(21) International Application Number:
PCT/US2024/033715

(22) International Filing Date:
13 June 2024 (13.06.2024)

(25) Filing Language: English

(26) Publication Language: English

(30) Priority Data:
63/508,477 15 June 2023 (15.06.2023) US

(71) Applicant: **DRAGONFLY ENERGY CORP.** [US/US]; 1190 Trademark Drive, Suite 108, Reno, NV 89521 (US).

(72) Inventor: **HOPKINS, Ryan**; 1095 S University Park Loop, Reno, NV 89512 (US).

(74) Agent: **HARMON, John, S.** et al.; Wolf, Greenfield & Sacks, P.C., 600 Atlantic Avenue, Boston, MA 02210-2206 (US).

(81) Designated States *(unless otherwise indicated, for every kind of national protection available)*: AE, AG, AL, AM, AO, AT, AU, AZ, BA, BB, BG, BH, BN, BR, BW, BY, BZ, CA, CH, CL, CN, CO, CR, CU, CV, CZ, DE, DJ, DK, DM, DO, DZ, EC, EE, EG, ES, FI, GB, GD, GE, GH, GM, GT, HN, HR, HU, ID, IL, IN, IQ, IR, IS, IT, JM, JO, JP, KE, KG, KH, KN, KP, KR, KW, KZ, LA, LC, LK, LR, LS, LU, LY, MA, MD, MG, MK, MN, MU, MW, MX, MY, MZ, NA, NG, NI, NO, NZ, OM, PA, PE, PG, PH, PL, PT, QA, RO, RS, RU, RW, SA, SC, SD, SE, SG, SK, SL, ST, SV, SY, TH, TJ, TM, TN, TR, TT, TZ, UA, UG, US, UZ, VC, VN, WS, ZA, ZM, ZW.

(84) Designated States *(unless otherwise indicated, for every kind of regional protection available)*: ARIPO (BW, CV, GH, GM, KE, LR, LS, MW, MZ, NA, RW, SC, SD, SL, ST, SZ, TZ, UG, ZM, ZW), Eurasian (AM, AZ, BY, KG, KZ, RU, TJ, TM), European (AL, AT, BE, BG, CH, CY, CZ, DE, DK, EE, ES, FI, FR, GB, GR, HR, HU, IE, IS, IT, LT, LU, LV, MC, ME, MK, MT, NL, NO, PL, PT, RO, RS, SE, SI, SK, SM, TR), OAPI (BF, BJ, CF, CG, CI, CM, GA, GN, GQ, GW, KM, ML, MR, NE, SN, TD, TG).

Published:
— *with international search report (Art. 21(3))*

(54) **Title:** SPRAY DEPOSITION SYSTEMS FOR ELECTROCHEMICAL DEVICE MANUFACTURING AND RELATED METHODS

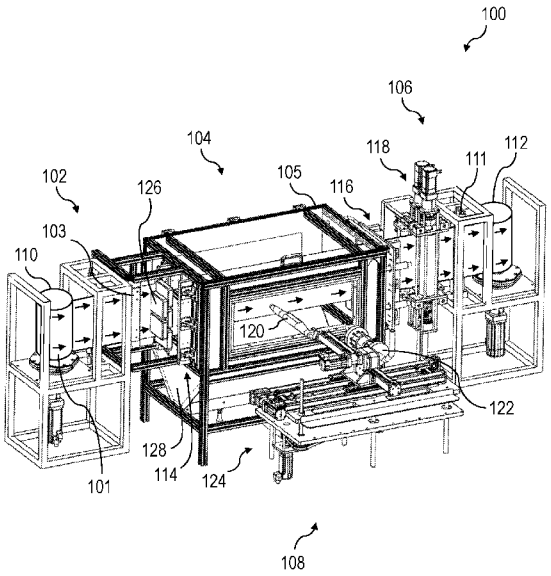

FIG. 1

(57) **Abstract:** Systems and methods for spray depositing a material layer using an ionically conductive powder are disclosed. The spray deposited material layer can be used to form an electrochemical cell. Systems and methods for manufacturing electrochemical cells are also disclosed. Systems and methods for heating a gas are also disclosed. Systems and methods involving spray deposition of a material layer and directing a plasma towards a substrate are also disclosed.

WO 2024/259037 A3

[Continued on next page]

(88) Date of publication of the international search report:
27 March 2025 (27.03.2025)

INTERNATIONAL SEARCH REPORT

International application No.
PCT/US2024/033715

A. CLASSIFICATION OF SUBJECT MATTER

IPC - INV. C23C 4/06; C23C 4/12; H01M 4/04; H01M 4/139; H01M 4/36; H01M 10/056 (2024.01)
ADD. H01M 4/62 (2024.01)

CPC - INV. C23C 4/06; C23C 4/12; H01M 4/0404; H01M 4/0419; H01M 4/366
ADD. H01M 4/622; Y02P 20/54

According to International Patent Classification (IPC) or to both national classification and IPC

B. FIELDS SEARCHED

Minimum documentation searched (classification system followed by classification symbols)
See Search History document

Documentation searched other than minimum documentation to the extent that such documents are included in the fields searched
See Search History document

Electronic database consulted during the international search (name of database and, where practicable, search terms used)
See Search History document

C. DOCUMENTS CONSIDERED TO BE RELEVANT

Category*	Citation of document, with indication, where appropriate, of the relevant passages	Relevant to claim No.
X --- Y	US 2017/0130312 A1 (TOKYO ELECTRON LIMITED) 11 May 2017; Fig. 1; Paras. [0032], [0035]-[0038], [0047], [0053], [0061]-[0064] and [0070]	1-3, 14-15, 17/15 and 18/(17/15) --- 16, 17/16 and 18/(17/16)
Y	WO 2015/126439 A1 (APPLIED MATERIALS, INC.) 27 August 2015; Fig. 2A; Paras. [0060], [0063], [0067], [0069] and [0081]	16, 17/16 and 18/(17/16)
A	US 2012/0064225 A1 (BACHRACH ET AL.) 15 March 2012; Figs. 1-2; entire document	1-3 and 14-18

☐ Further documents are listed in the continuation of Box C. ☐ See patent family annex.

* Special categories of cited documents:
"A" document defining the general state of the art which is not considered to be of particular relevance
"D" document cited by the applicant in the international application
"E" earlier application or patent but published on or after the international filing date
"L" document which may throw doubts on priority claim(s) or which is cited to establish the publication date of another citation or other special reason (as specified)
"O" document referring to an oral disclosure, use, exhibition or other means
"P" document published prior to the international filing date but later than the priority date claimed
"T" later document published after the international filing date or priority date and not in conflict with the application but cited to understand the principle or theory underlying the invention
"X" document of particular relevance; the claimed invention cannot be considered novel or cannot be considered to involve an inventive step when the document is taken alone
"Y" document of particular relevance; the claimed invention cannot be considered to involve an inventive step when the document is combined with one or more other such documents, such combination being obvious to a person skilled in the art
"&" document member of the same patent family

Date of the actual completion of the international search	Date of mailing of the international search report
22 August 2024 (22.08.2024)	SEP 20 2024
Name and mailing address of the ISA/ Mail Stop PCT, Attn: ISA/US, Commissioner for Patents P.O. Box 1450, Alexandria, Virginia 22313-1450 Facsimile No. 571-273-8300	Authorized officer Shane Thomas Telephone No. PCT Helpdesk: 571-272-4300

INTERNATIONAL SEARCH REPORT

International application No.
PCT/US2024/033715

Box No. II Observations where certain claims were found unsearchable (Continuation of item 2 of first sheet)

This international search report has not been established in respect of certain claims under Article 17(2)(a) for the following reasons:

1. ☐ Claims Nos.:
because they relate to subject matter not required to be searched by this Authority, namely:

2. ☐ Claims Nos.:
because they relate to parts of the international application that do not comply with the prescribed requirements to such an extent that no meaningful international search can be carried out, specifically:

3. ☒ Claims Nos.: 4-13,19-27
because they are dependent claims and are not drafted in accordance with the second and third sentences of Rule 6.4(a).

Box No. III Observations where unity of invention is lacking (Continuation of item 3 of first sheet)

This International Searching Authority found multiple inventions in this international application, as follows:

1. ☐ As all required additional search fees were timely paid by the applicant, this international search report covers all searchable claims.

2. ☐ As all searchable claims could be searched without effort justifying additional fees, this Authority did not invite payment of additional fees.

3. ☐ As only some of the required additional search fees were timely paid by the applicant, this international search report covers only those claims for which fees were paid, specifically claims Nos.:

4. ☐ No required additional search fees were timely paid by the applicant. Consequently, this international search report is restricted to the invention first mentioned in the claims; it is covered by claims Nos.:

Remark on Protest

☐ The additional search fees were accompanied by the applicant's protest and, where applicable, the payment of a protest fee.

☐ The additional search fees were accompanied by the applicant's protest but the applicable protest fee was not paid within the time limit specified in the invitation.

☐ No protest accompanied the payment of additional search fees.