(19) Europäisches Patentamt
European Patent Office
Office européen des brevets

(11) **EP 3 543 610 B1**

(12) **EUROPEAN PATENT SPECIFICATION**

(45) Date of publication and mention of the grant of the patent:
05.05.2021 Bulletin 2021/18

(51) Int Cl.:
F23R 3/10 *(2006.01)*

(21) Application number: **18425016.5**

(22) Date of filing: **23.03.2018**

(54) GAS TURBINE HAVING A DAMPER

GASTURBINE MIT DÄMPFER

TURBINE À GAZ AVEC ATTÉNUATEUR

(84) Designated Contracting States:
AL AT BE BG CH CY CZ DE DK EE ES FI FR GB GR HR HU IE IS IT LI LT LU LV MC MK MT NL NO PL PT RO RS SE SI SK SM TR

(43) Date of publication of application:
25.09.2019 Bulletin 2019/39

(73) Proprietors:
- **Ansaldo Energia Switzerland AG**
  5401 Baden (CH)
- **Ansaldo Energia S.p.A.**
  16152 Genova (IT)

(72) Inventors:
- **Bothien, Mirko Ruben**
  8037 Zürich (CH)
- **Campa, Giovanni**
  16154 Genova (IT)
- **Scarpato, Alessandro**
  5417 Untersiggenthal (CH)

(74) Representative: **Bernotti, Andrea et al**
Studio Torta S.p.A.
Via Viotti, 9
10121 Torino (IT)

(56) References cited:
DE-A1-102015 218 677
US-A1- 2013 062 425
US-A1- 2017 082 287

Note: Within nine months of the publication of the mention of the grant of the European patent in the European Patent Bulletin, any person may give notice to the European Patent Office of opposition to that patent, in accordance with the Implementing Regulations. Notice of opposition shall not be deemed to have been filed until the opposition fee has been paid. (Art. 99(1) European Patent Convention).

EP 3 543 610 B1

Printed by Jouve, 75001 PARIS (FR)

Description

TECHNICAL FIELD

[0001] The present invention relates to a gas turbine and a method for retrofitting same.

BACKGROUND

[0002] Gas turbines are known to comprise a compressor, a combustion chamber fed with: compressed air supplied from the compressor and with a fuel, in which combustion chamber the fuel is combusted generating a high pressure and high temperature hot gas, and a turbine where the hot gas is expanded to gather mechanical work.

[0003] In particular, the compressor is connected to a plenum and the combustion chamber has a combustor with a front plate provided with burners. The front plate and the burners are housed in the plenum, such that the compressed air is supplied into the plenum and from the plenum it enters the burners where it is mixed with the fuel and thus passes into the combustor where combustion occurs.

[0004] The combustion process can cause pulsations that, when occurs, should be controlled and damped to prevent mechanical failure of the components of the combustion chamber.

[0005] A kind of damper often used in gas turbine applications is the so called: Helmholtz damper; Helmholtz dampers have a chamber: connected via a neck to the environment where pulsations to be damped are generated, such as the combustor of the combustion chamber.

[0006] The frequency at which the pulsations are damped depends on the volume of the chamber and the length of the neck (actually the effective length that is longer than the geometrical length), such that to damp pulsations in the relevant frequency range (e.g. between 50-500 Hz) given proportions between the chamber volume and the neck length are required.

[0007] In addition, the efficiency of the Helmholtz damper depends on the volume of the chamber, such that the larger the volume, the higher the damping effect.

[0008] Other kinds of dampers are known, such as half wave or quarter wave dampers; these dampers have similar constrains as the Helmholtz dampers with respect to geometrical proportions and volume. In the following description reference to Helmholtz dampers is made.

[0009] In order to optimize the damping effect, the dampers should be provided at an area of the combustor close to the zone where the flame is anchored during operation, because it is there that the pulsations are generated.

[0010] Nevertheless, because of the constrains imposed by the required geometrical proportions of the damper, the volume of the chamber, and the very few space available in the area of the combustor, it could be difficult or even impossible to provide dampers with the required features and at the required position.

DE 10 2015 218677 A1 discloses a gas turbine having a compressor, a plenum connected to the compressor, a combustion chamber with a combustor having a front plate and burners connected to the front plate, and at least a damper connected to the front plate and housed in the plenum. The front plate and the burners are at least partially housed in the plenum and the damper has a chamber tailored to the space available between adjacent burners. Other examples of known gas turbines are disclosed in US 2017/082287 A1 and in US 2013/062425 A1.

SUMMARY

[0011] An aspect of the invention includes providing a gas turbine with a damper that is able to efficiently damp pulsations in the required frequency range and at the same time that is provided at the required position of the combustor close to the area where the flame is anchored.

[0012] These and further aspects are attained by providing a gas turbine in accordance with the accompanying claims.

BRIEF DESCRIPTION OF THE DRAWINGS

[0013] Further characteristics and advantages will be more apparent from the description of a preferred but non-exclusive embodiment of the gas turbine according to the invention, illustrated by way of non-limiting example in the accompanying drawings, in which:

Figure 1 schematically shows a gas turbine;
Figure 2 shows a portion of a combustion chamber of a gas turbine without dampers;
Figure 3 shows a portion of a combustion chamber of a gas turbine with dampers;
Figures 4 through 7 show different examples of a front plate with burners and dampers;
Figures 8 through 10 show enlarged portions of the front plate and the area around it in different embodiments;
Figures 11 through 12 show different examples of dampers;
Figure 13 shows a damper connected to a front plate.

DETAILED DESCRIPTION OF EXEMPLARY EMBODIMENTS of the invention

[0014] With reference to the figures, these show a gas turbine 1 having a compressor 2, a combustion chamber 3 and a turbine 4. The gas turbine further has a plenum 5-connected to the compressor 2; in the plenum 5 there is housed a front end of the combustion chamber 3. The combustion chamber 3 comprises a combustor 7 with a front plate 8 and burners 9 connected to the front plate 8. The burners 9 are connected to a fuel supply system (not shown) for fuel feeding.

[0015] The gas turbine 1 comprises one or preferably more than one dampers 10 connected to the front plate 8 and housed in the plenum 5. This way the dampers are connected to an area of the combustion chamber close to the area where the flame is anchored, the combustion process takes place and pulsations can generate. Damping in this area prevents the pulsations from propagating through the combustor and possibly damaging it.

[0016] In a preferred embodiment the combustion chamber 3 is an annular combustion chamber and the burners 9 are provided over the entire circumference of the combustion chamber. Preferably the circumferential distance between the burners is constant, but it could also vary in particular applications. Preferably all the burners lay on one circumference (figures 4 through 6, 11, 12), but embodiments with burners laying on different circumferences, such as concentric circumferences, are also possible (figure 7).

[0017] The dampers 10 have a chamber 11 tailored to the space available between adjacent burners 9. This feature allows an optimized use of the available space, such that the volume of the chambers 11 and therefore the damping efficiency can be optimized, e.g. maximized.

[0018] Preferably tailoring to the space available between adjacent dampers 10 is done in the plane of the front plate 8, as shown for example in figures 4 through 7.

[0019] Tailoring includes shaping the chamber 11 in the plane of the front plate 8 (figures 4 through 7) for the chamber shape to adapt to the available space between the burners 9.

[0020] Preferably, in order to further optimize the use of the available space, the chamber 11 is further tailored to an outer perimeter 13 of the front plate 8.

[0021] Tailoring includes shaping the chamber 11 in the plane of the front plane 8 (figures 4 through 7) for the chamber shape to adapt to the available space delimited by the outer perimeter 13.

[0022] For example, a substantially triangular space can be defined between adjacent burners 9 and the outer perimeter 13 of the front plate 8, and the chamber 11 preferably has a substantially triangular shape and is housed in this space (figure 4).

[0023] In addition or alternatively, the front plate 8 can be annular in shape and the chamber 11 can be further tailored to an inner perimeter 15 of the front plate 8.

[0024] Tailoring includes shaping the chamber 11 in the plane of the front plane 8 (figures 5 through 7) for the chamber shape to adapt to the available space delimited by the inner perimeter 15.

[0025] For example, a substantially triangular space can be defined between adjacent burners 9 and the inner perimeter 15 of the front plate 8, and the chamber 11 has a substantially triangular shape and: is housed in this space (figure 5).

[0026] In a further example, the chamber 11 can extend between the outer perimeter 13 and the inner perimeter 15 of the annular front plate 8. In this case the use of the available space is further optimized (figure 6).

[0027] In addition, in order to even further optimize the use of the available space, the chamber 11 can be tailored to a wall 16 delimiting the plenum 5 (figures 9, 10).

[0028] The damper 10 is a Helmholtz damper and comprises the chamber 11 and a neck 17 that is connected between the chamber 11 and the front plate 8.

[0029] In a preferred and advantageous embodiment, the damper 10 does not substantially affect the air flow through the burners 9, thus neither the total flow through all the burners 9, nor the flow through each burner 9 is substantially affected. For example this feature can promote retrofitting of existing gas turbines; this feature can also be useful in new gas turbines, e.g. for leaving open the possibility of upgrading or to allow the use of existing data on air flow through the dampers and/or formations of the air/fuel mixture and/or combustion during design.

[0030] With reference to figures 2 and 3, during operation a first air flow F1 passes through the burner 9 when no dampers 10 are provided connected to the front plate 8, and a second air flow F2 passes through the burner 9 when the dampers 10 (one or more dampers) are connected to the front plate 8.

[0031] The chamber 11 has a given size S in a direction facing away from the front plate 8. Advantageously, the given size S is limited so that the second air flow F2 is substantially the same as the first air flow F1.

[0032] The fact that the limited size S is limited does not imply that it is less than or equal to the distance between the openings 18 for air entrance into the burners 9 and the front plate 8; the given size S can be less than or equal to or even greater than the distance between the openings 18 for air entrance into the burners 9 and the front plate 8, provided that the air flow into the burners 9 is not substantially counteracted.

[0033] In addition, in a particularly advantageous embodiment the mass flow distribution through the burners and for each burner is not substantially affected, i.e. it is not substantially changed in case the damper is provided or not.

[0034] In this connection, the gas turbine can be provided with guides 20 that influence the air flow F2, such that the distribution of the air flow F2 is substantially the same as the distribution of the air flow F1. The guides 20 can be defined by the shape of the chamber 11 (figures 9, 12) and/or neck 17; alternatively or in addition, the guides can also be defined by baffles or steering components provided within the plenum 5 (figures 10, 11) e. g. connected to the chamber 11 and/or to the neck 17 and/or not connected either to the chamber 11 or to the neck 17 but as separate elements.

[0035] The operation of the gas turbine is apparent from that described and illustrated and is substantially the following.

[0036] The compressor 2 compresses air and supplies it into the plenum 5. From the plenum 5 the air flow F2 of compressed air enters into the burners 9 via the openings 18, it is mixed with fuel and the mixture is fed into the combustor 7. In the combustor 7 the mixture is burned

generating the hot gas that is expanded in the turbine 4.

[0037] Pulsations that are generated into the combustor 7 are damper by the dampers 10. Damping is effective because thanks to the optimization of the use of the available space, the damper can be designed in order to match the frequency range to be damped and the damping efficiency with the requirements. Disclosed herein is also a method for retrofitting a gas turbine.

[0038] In particular, the method comprises providing at least a damper 10 connected to the front plate 8 and housed in the plenum 5, the damper 10 having a shape tailored to the space available between adjacent burners 9.

[0039] In a preferred embodiment of the method, the damper 10 has a given size S facing away from the front plate 8, and the method comprises limiting the given size S so that the provision of the damper 10 does not affect, e.g. does not substantially causes a reduction of air flow through the burners 10.

[0040] Figure 13 shows an arrangement of a damper 10 (as described before or also of different type) that is connected to the front plate 8.

[0041] This arrangement is useful (but not mandatory) when the damper 10 has to be connected close to the position where the flame is anchored, e.g. the connection can be done to the front plate 8 or elsewhere.

[0042] Figure 13 shows the Helmholtz damper having the chamber 11 and the neck 17 connected to the front plate 8; this figure also shows the burner 9 and a flame 21 generated by the fuel supplied via the burner 9; the flame can either be a premixed flame or a diffusion flame.

[0043] The damper 10 has its terminal portion 23 inserted in an opening 25 of the front plate 8. In particular between the opening 25 and the terminal portion 23 a gap 26 (e.g. annular gap) is defined. The terminal portion 23 of the damper 10 facing the front plate 8 is flared.

[0044] The gap 26 and the flared terminal portion 23 are advantageous because they provide an efficient way to cool the terminal portion 23. In fact, the gap 26 allows air flow through it; such an air flow cools the terminal part 23 of the damper 10.

[0045] In addition, since the gap 26 constitutes a restricting nozzle for the air- flow (e.g. because of the flared terminal portion 23) the air flow accelerates when passing through the gap 26, further improving the cooling efficiency.

[0046] In addition, notwithstanding the cooling, the operation of the damper 10 and thus its damping efficiency is not affected. In fact the flared terminal portion 23 defines a diverging nozzle that injects the air flow away from the neck 17, e.g. over a conical path. The vortices 28 at the neck 17 (these vortices damp the vibrations) are thus not affected and damping efficiency is consequently not affected.

[0047] For example, when the damper 10 is at a position close to the flame 21, this arrangement advantageously allows to cool the neck 17 preventing its damage without affecting its damping efficiency.

[0048] In practice the materials used and the dimensions can be chosen at will according to requirements and to the state of the art.

REFERENCE NUMBERS

[0049]

1	gas turbine
2	compressor
3	combustion chamber
4	turbine
5	plenum
7	combustor
8	front plate
9	burners
10	damper
11	chamber
13	outer perimeter
15	inner perimeter
16	wall of the plenum
17	neck
18	openings
20	guide
21	flame
23	terminal portion
25	opening
26	gap
28	vortices
F1	first air flow
F2	second air flow
S	size of the damper

Claims

1. A gas turbine (1) having a compressor (2), a plenum (5) connected to the compressor (2), a combustion chamber (3) with a combustor (7) having a front plate (8) and burners (9) connected to the front plate (8), and at least a damper (10) connected to the front plate (8) and housed in the plenum (5), the front plate (8) and the burners (9) being at least partially housed in the plenum (5), the damper (10) having a chamber (11) tailored to the space available between adjacent burners (9); **characterized in that** the damper (10) is a Helmholtz damper and comprises the chamber (11) and a neck (17), the neck (17) being connected between the chamber (11) and the front plate (8).

2. The gas turbine (1) according to claim 1, **characterized in that** the chamber (11) of the damper (10) is further tailored to an outer perimeter (13) of the front plate (8).

3. The gas turbine (1) according to claim 2, **characterized in that** a substantially triangular space is defined between adjacent burners (9) and the outer

perimeter (13) of the front plate (8), the chamber (11) having a substantially triangular shape and being housed in this space.

4. The gas turbine (1) according to any one of claims 1 through 3, **characterized in that** the front plate (8) is annular in shape and the chamber (11) is further tailored to an inner perimeter (15) of the front plate (8).

5. The gas turbine (1) according to claim 4, **characterized in that** a substantially triangular space is defined between adjacent burners (9) and the inner perimeter (15) of the front plate (8), the chamber (11) having a substantially triangular shape and being housed in this space.

6. The gas turbine (1) according to claim 2 and 4, **characterized in that** the chamber (11) extends between the outer perimeter (13) and the inner perimeter (15) of the annular front plate (8).

7. The gas turbine (1) according to any one of the previous claims, **characterized in that** the chamber (11) is tailored to a wall delimiting the plenum (5).

8. The gas turbine (1) according to any one of the previous claims, **characterized in that** during operation
a first air flow (F1) passes through the burners (9) when no damper (10) is provided connected to the front plate (8), and
a second air flow (F2) passes through the burners (9) when the damper (10) is provided connected to the front plate (8),
wherein
the chamber (11) has a given size (S) in a direction facing away from the front plate (8), and
the given size (S) is such that the second air flow (F2) is the same as the first air flow (F1).

9. The gas turbine (1) according to any one of the previous claims, **characterized in that** during operation
a first air flow (F1) passes through the burners (9) when no damper (10) is provided connected to the front plate (8), and
a second air flow (F2) passes through the burners (9) when the damper (10) is provided connected to the front plate (8),
characterized by being provided with at least a guide that influences the second air flow (F2), such that the distribution of the second air flow (F2) is substantially the same as the distribution of the first air flow (F1).

10. The gas turbine (1) according to claim 9, **characterized in that** the at least a guide is defined by the shape of the chamber (11) and/or neck (17), and/or the at least a guide is defined by at least a baffle or steering component provided within the plenum (5).

11. The gas turbine (1) according to any one of the previous claims, **characterized in that** the damper (10) has a terminal portion (23) facing the front plate (8),
the front plate (8) has an opening (25),
the terminal portion (23) is flared,
the terminal portion (23) is inserted into the opening (25),
a gap (26) is defined between the terminal portion (23) and the opening (25),
the gap (26) defines a diverging nozzle for injecting the air flow away from the damper (10).

12. The gas turbine (1) according to claim 11, **characterized in that** the gap (26) defines a restricting nozzle that accelerates the air flow passing through it.

Patentansprüche

1. Gasturbine (1), die einen Kompressor (2), einen mit dem Kompressor (2) verbundenen Luftsammler (5), einen Verbrennungsraum (3) mit einer Brennkammer (7), die eine Frontplatte (8) und Brenner (9) aufweist, die mit der Frontplatte (8) verbunden sind, und wenigstens einen Dämpfer (10) aufweist, der mit der Frontplatte (8) verbunden und in dem Luftsammler (5) aufgenommen ist, wobei die Frontplatte (8) und die Brenner (9) wenigstens teilweise in dem Luftsammler (5) aufgenommen sind, wobei der Dämpfer (10) einen Raum (11) aufweist, der auf den Bereich zugeschnitten ist, der zwischen den angrenzenden Brennern (9) verfügbar ist; **dadurch gekennzeichnet, dass** der Dämpfer (10) ein Helmholtz-Dämpfer ist und den Raum (11) und einen Hals (17) umfasst, wobei der Hals (17) zwischen dem Raum (11) und der Frontplatte (8) verbunden ist.

2. Gasturbine (1) nach Anspruch 1, **dadurch gekennzeichnet, dass** der Raum (11) des Dämpfers (10) ferner auf einen Außenumfang (13) der Frontplatte (8) zugeschnitten ist.

3. Gasturbine (1) nach Anspruch 2, **dadurch gekennzeichnet, dass** zwischen den angrenzenden Brennern (9) und dem Außenumfang (13) der Frontplatte (8) ein im Wesentlichen dreieckiger Bereich definiert ist, wobei der Raum (11) eine im Wesentlichen dreieckige Form aufweist und in diesem Bereich aufgenommen ist.

4. Gasturbine (1) nach einem der Ansprüche 1 bis einschließlich 3, **dadurch gekennzeichnet, dass** die Frontplatte (8) ringförmig ist und der Raum (11) ferner auf einen Innenumfang (15) der Frontplatte (8) zugeschnitten ist.

5. Gasturbine (1) nach Anspruch 4, **dadurch gekennzeichnet, dass** zwischen den angrenzenden Brennern (9) und dem Innenumfang (15) der Frontplatte (8) ein im Wesentlichen dreieckiger Bereich definiert ist, wobei der Raum (11) eine im Wesentlichen dreieckige Form aufweist und in diesem Bereich aufgenommen ist.

6. Gasturbine (1) nach Anspruch 2 und 4, **dadurch gekennzeichnet, dass** sich der Raum (11) zwischen dem Außenumfang (13) und dem Innenumfang (15) der ringförmigen Frontplatte (8) erstreckt.

7. Gasturbine (1) nach einem der vorhergehenden Ansprüche, **dadurch gekennzeichnet, dass** der Raum (11) auf eine Wand zugeschnitten ist, die den Luftsammler (5) begrenzt.

8. Gasturbine (1) nach einem der vorhergehenden Ansprüche, **dadurch gekennzeichnet, dass** während eines Betreibens ein erster Luftstrom (F1) die Brenner (9) durchläuft, wenn kein Dämpfer (10) vorgesehen ist, der mit der Frontplatte (8) verbunden ist, und ein zweiter Luftstrom (F2) die Brenner (9) durchläuft, wenn der Dämpfer (10) vorgesehen ist, der mit der Frontplatte (8) verbunden ist,
wobei der Raum (11) in einer von der Frontplatte (8) abgewandten Richtung eine gegebene Größe (S) aufweist, und
die gegebene Größe (S) derart ist, dass der zweite Luftstrom (F2) der gleiche wie der erste Luftstrom (F1) ist.

9. Gasturbine (1) nach einem der vorhergehenden Ansprüche, **dadurch gekennzeichnet, dass** während des Betreibens ein erster Luftstrom (F1) die Brenner (9) durchläuft, wenn kein Dämpfer (10) vorgesehen ist, der mit der Frontplatte (8) verbunden ist, und ein zweiter Luftstrom (F2) die Brenner (9) durchläuft, wenn der Dämpfer (10) vorgesehen ist, der mit der Frontplatte (8) verbunden ist,
gekennzeichnet durch ein Versehen mit wenigstens einer Führung, die den zweiten Luftstrom (F2) derart beeinflusst, dass die Verteilung des zweiten Luftstroms (F2) im Wesentlichen die gleiche wie die Verteilung des ersten Luftstroms (F1) ist.

10. Gasturbine (1) nach Anspruch 9, **dadurch gekennzeichnet, dass** die wenigstens eine Führung durch die Form des Raums (11) und/oder des Halses (17) definiert ist, und/oder die wenigstens eine Führung durch wenigstens eine Leiteinrichtung oder eine Lenkungskomponente definiert ist, die innerhalb des Luftsammlers (5) bereitgestellt ist.

11. Gasturbine (1) nach einem der vorhergehenden Ansprüche, **dadurch gekennzeichnet, dass**
der Dämpfer (10) einen der Frontplatte (8) zugewandten Anschlussabschnitt (23) aufweist,
die Frontplatte (8) eine Öffnung (25) aufweist,
der Anschlussabschnitt (23) trichterförmig aufgeweitet ist,
der Anschlussabschnitt (23) in die Öffnung (25) eingeführt wird,
ein Spalt (26) zwischen dem Anschlussabschnitt (23) und der Öffnung (25) definiert ist,
der Spalt (26) eine divergierende Düse zum Einspritzen des Luftstroms weg von dem Dämpfer (10) definiert.

12. Gasturbine (1) nach Anspruch 11, **dadurch gekennzeichnet, dass** der Spalt (26) eine begrenzende Düse definiert, die den Luftstrom beschleunigt, der sie durchläuft.

Revendications

1. Turbine à gaz (1) présentant un compresseur (2), une chambre (5) connectée au compresseur (2), une chambre de combustion (3) comprenant une chambre de combustion (7) présentant une plaque avant (8), et de brûleurs (9) connectés à la plaque avant (8), et au moins un amortisseur (10) connecté à la plaque avant (8) et logé dans la chambre (5), la plaque avant (8) et les brûleurs (9) étant logés en partie au moins dans la chambre (5), l'amortisseur (10) présentant une chambre (11) adaptée à l'espace disponible entre des brûleurs adjacents (9) ; **caractérisée en ce que** l'amortisseur (10) est un amortisseur de Helmholtz, et comprend la chambre (11) et un col (17), le col (17) étant connecté entre la chambre (11) et la plaque avant (8).

2. Turbine à gaz (1) selon la revendication 1, **caractérisée en ce que** la chambre (11) de l'amortisseur (10) est adaptée en outre au périmètre extérieur (13) de la plaque avant (8).

3. Turbine à gaz (1) selon la revendication 2, **caractérisée en ce qu'**un espace sensiblement triangulaire est défini entre des brûleurs adjacents (9) et le périmètre extérieur (13) de la plaque avant (8), la chambre (11) présentant une forme sensiblement triangulaire et étant logée dans cet espace.

4. Turbine à gaz (1) selon l'une quelconque des revendications 1 à 3, **caractérisée en ce que** la plaque avant (8) est de forme annulaire, et la chambre (11) est adaptée en outre au périmètre intérieur (15) de la plaque avant (8).

5. Turbine à gaz (1) selon la revendication 4, **caractérisée en ce qu'**un espace sensiblement triangulaire est défini entre des brûleurs adjacents (9) et le périmètre intérieur (15) de la plaque avant (8), la cham-

bre (11) présentant une forme sensiblement triangulaire et étant logée dans cet espace.

6. Turbine à gaz (1) selon la revendication 2 et 4, **caractérisée en ce que** la chambre (11) s'étend entre le périmètre extérieur (13) et le périmètre intérieur (15) de la plaque avant annulaire (8).

7. Turbine à gaz (1) selon l'une quelconque des revendications précédentes, **caractérisée en ce que** la chambre (11) est adaptée à une paroi qui délimite la chambre (5).

8. Turbine à gaz (1) selon l'une quelconque des revendications précédentes, **caractérisée en ce que**, en fonctionnement, un premier flux d'air (F1) passe à travers les brûleurs (9) quand aucun amortisseur (10) n'est connecté à la plaque avant (8), et
un second flux d'air (F2) passe à travers les brûleurs (9) quand l'amortisseur (10) est connecté à la plaque avant (8),
dans laquelle
la chambre (11) présente des dimensions données (S) dans une direction faisant face en s'éloignant de la plaque avant (8), et les dimensions données (S) sont telles que le second flux d'air (F2) est identique au premier flux d'air (F1).

9. Turbine à gaz (1) selon l'une quelconque des revendications précédentes, **caractérisée en ce que**, en fonctionnement,
un premier flux d'air (F1) passe à travers les brûleurs (9) quand aucun amortisseur (10) n'est connecté à la plaque avant (8), et
un second flux d'air (F2) passe à travers les brûleurs (9) quand l'amortisseur (10) est connecté à la plaque avant (8),
caractérisée en ce que la turbine est dotée d'au moins un guide qui influence le second flux d'air (F2), de telle sorte que la répartition du second flux d'air (F2) soit sensiblement identique à la répartition du premier flux d'air (F1).

10. Turbine à gaz (1) selon la revendication 9, **caractérisée en ce que** l'un au moins des guides est défini par la forme de la chambre (11) et / ou du col (17), et / ou l'un au moins des guides est défini par au moins un composant déflecteur ou directeur fourni dans la chambre (5).

11. Turbine à gaz (1) selon l'une quelconque des revendications précédentes, **caractérisée en ce que**
l'amortisseur (10) présente une partie terminale (23) qui fait face à la plaque avant (8),
la plaque avant (8) présente une ouverture (25),
la partie terminale (23) est évasée,
la partie terminale (23) est insérée dans l'ouverture (25),
un intervalle (26) est défini entre la partie terminale (23) et l'ouverture (25), l'intervalle (26) définit une buse divergente destinée à injecter le flux d'air à distance de l'amortisseur (10).

12. Turbine à gaz (1) selon la revendication 11, **caractérisée en ce que** l'intervalle (26) définit une buse restrictive qui accélère le flux d'air qui passe à travers celle-ci.

Fig. 1

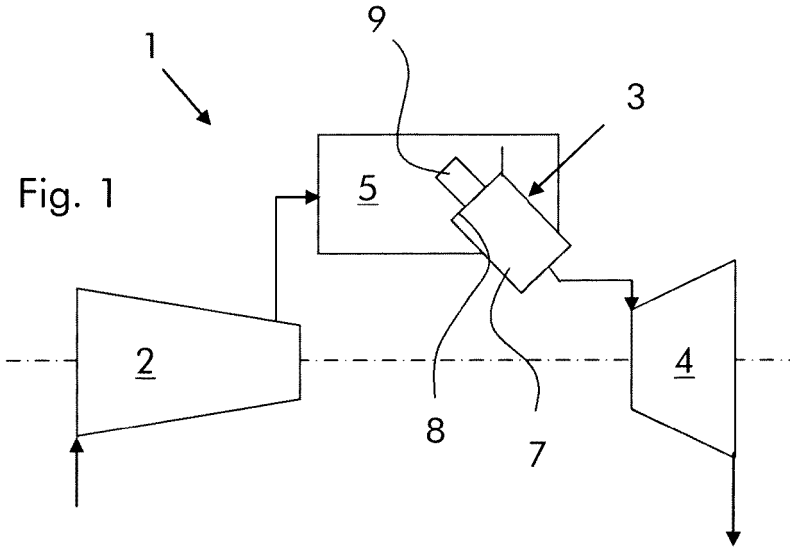

Fig. 2

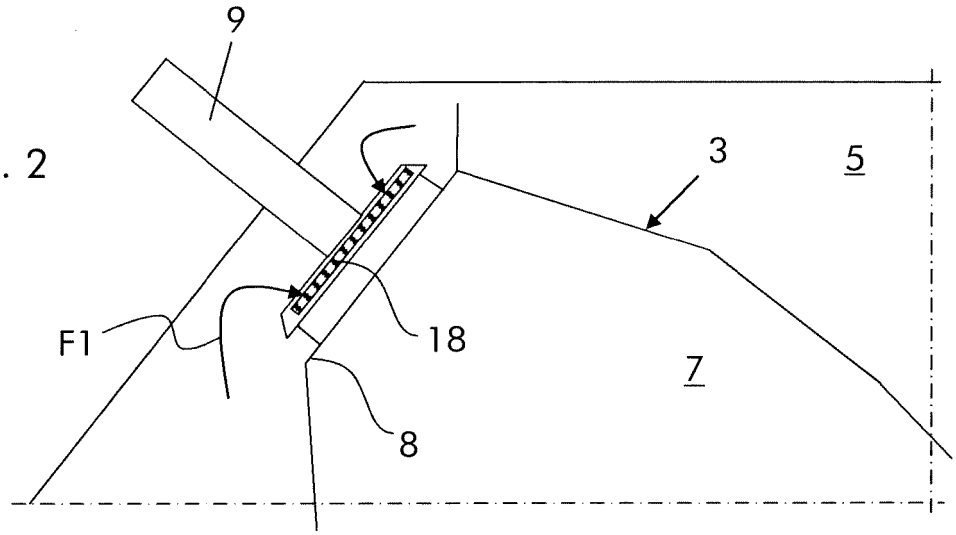

Fig. 3

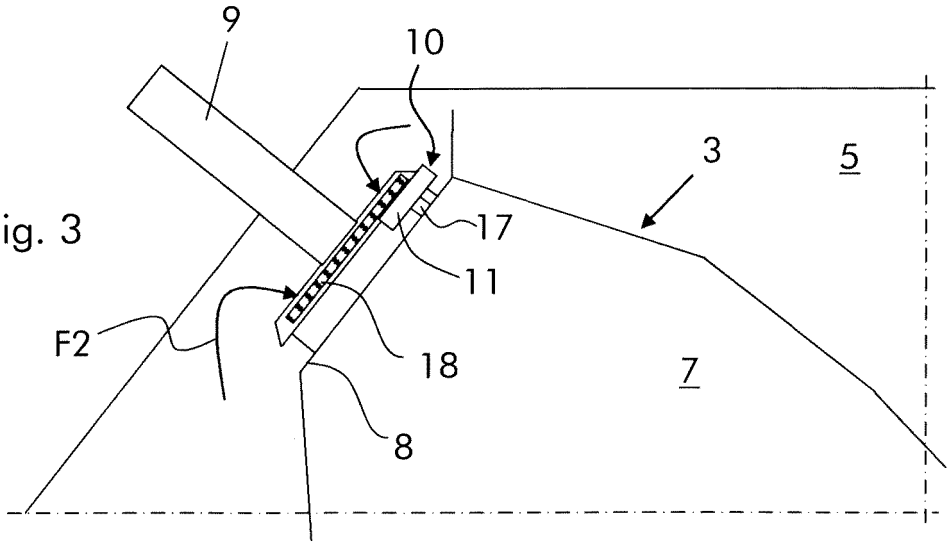

Fig. 4

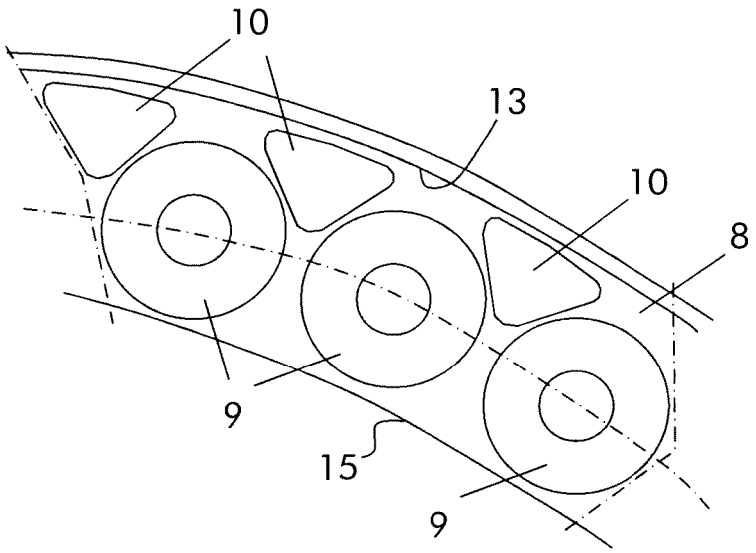

Fig. 5

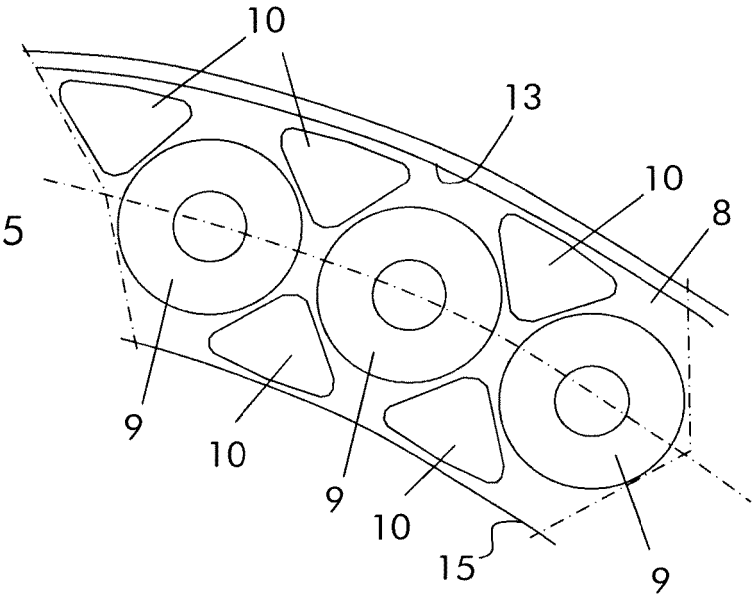

Fig. 6

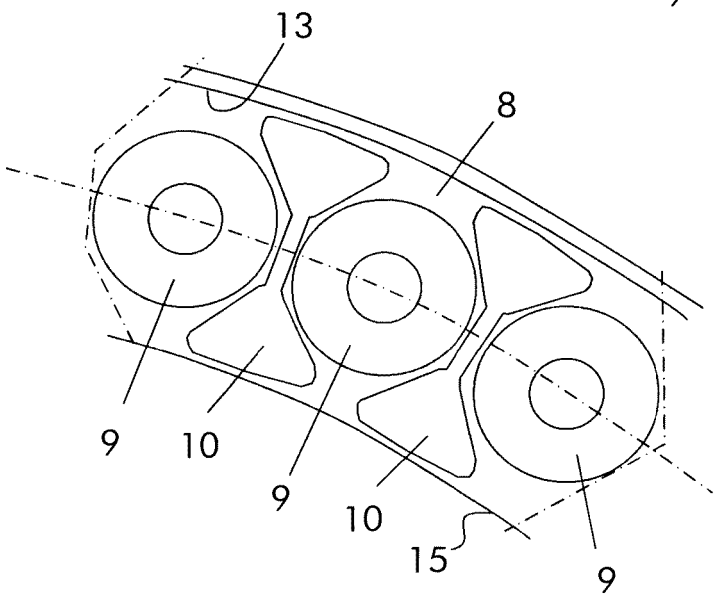

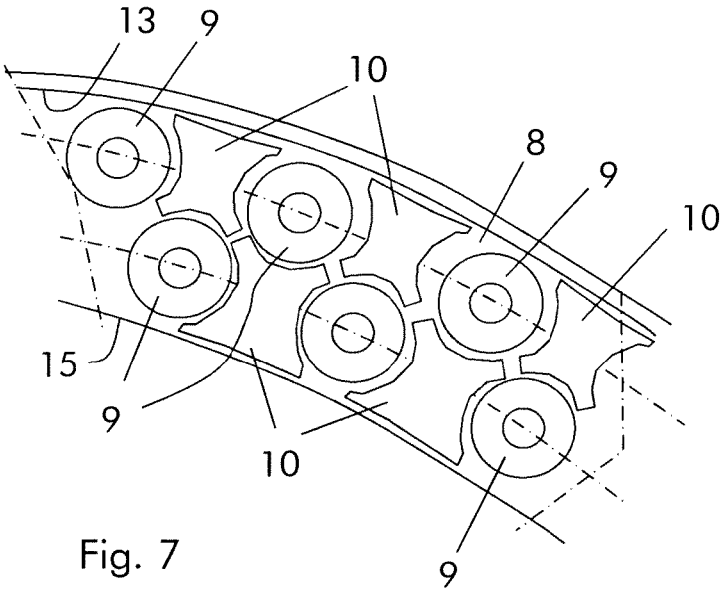

Fig. 7

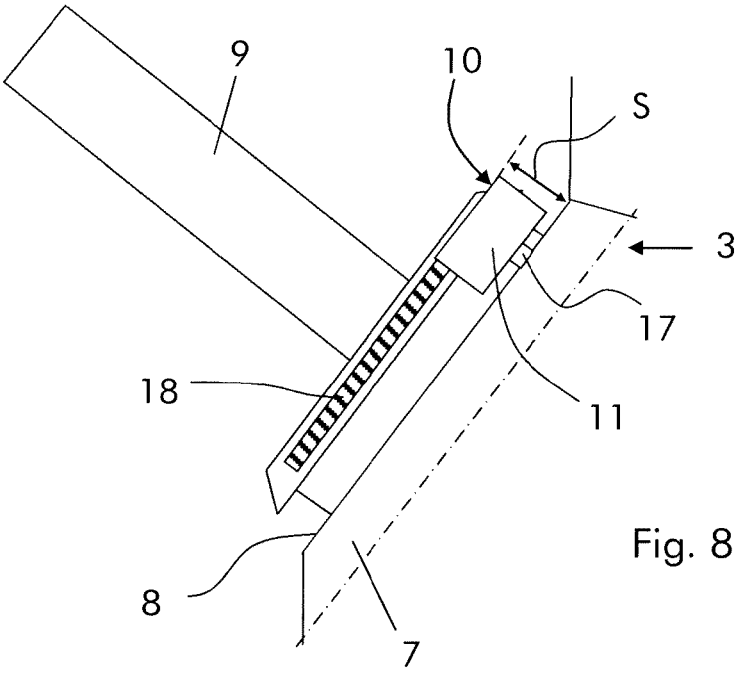

Fig. 8

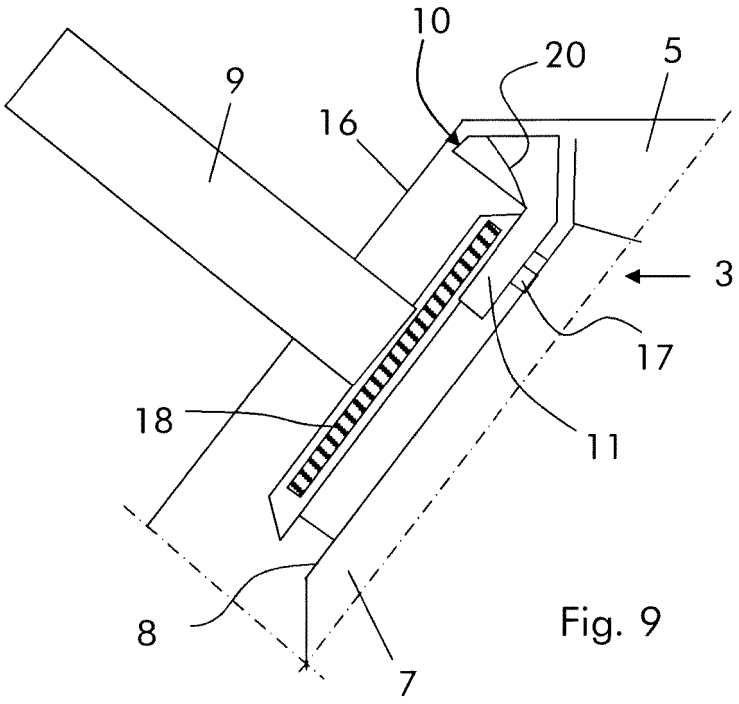

Fig. 9

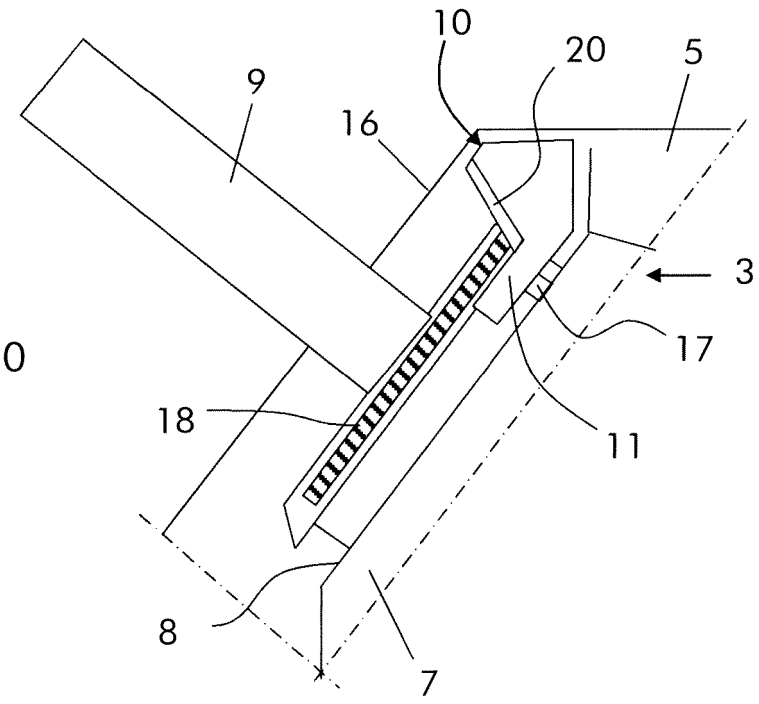

Fig. 10

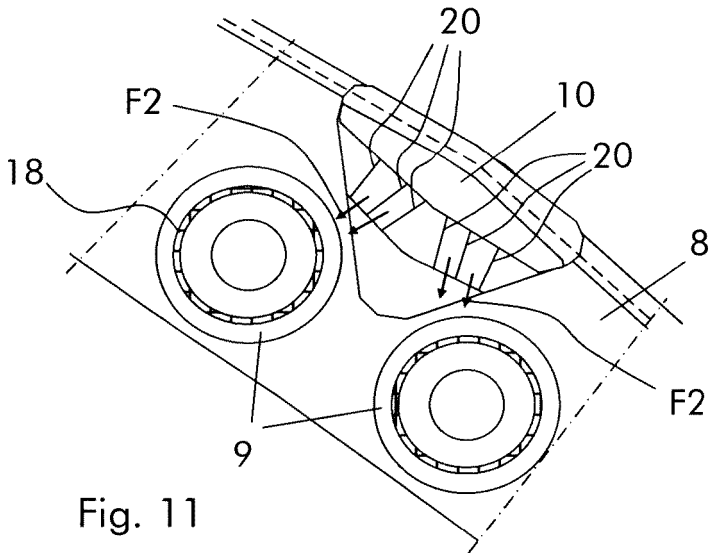

Fig. 11

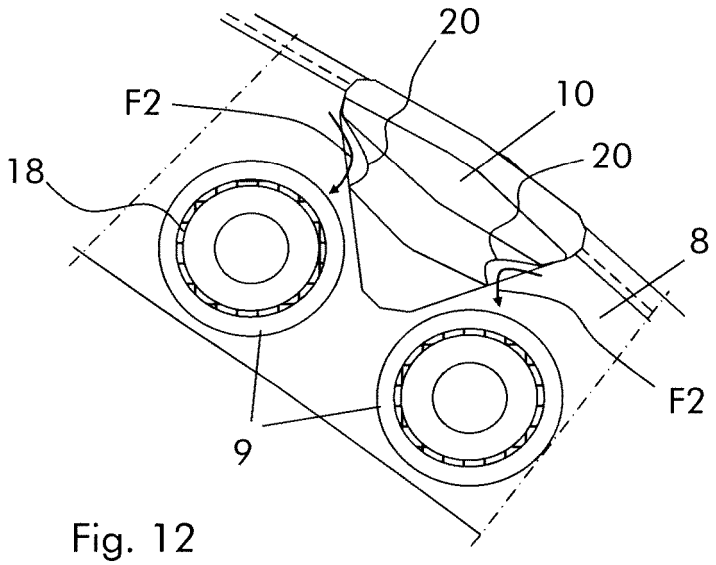

Fig. 12

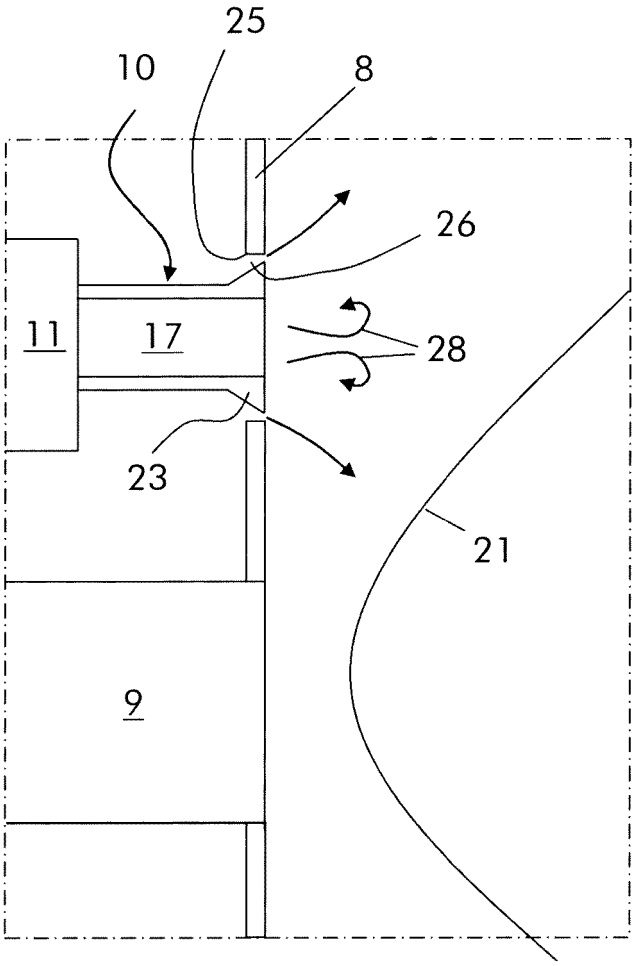

Fig. 13

REFERENCES CITED IN THE DESCRIPTION

This list of references cited by the applicant is for the reader's convenience only. It does not form part of the European patent document. Even though great care has been taken in compiling the references, errors or omissions cannot be excluded and the EPO disclaims all liability in this regard.

Patent documents cited in the description

- DE 102015218677 A1 **[0010]**
- US 2017082287 A1 **[0010]**
- US 2013062425 A1 **[0010]**