May 25, 1926. 1,586,262

R. NOBLE

TOOTHBRUSH

Filed April 8, 1925

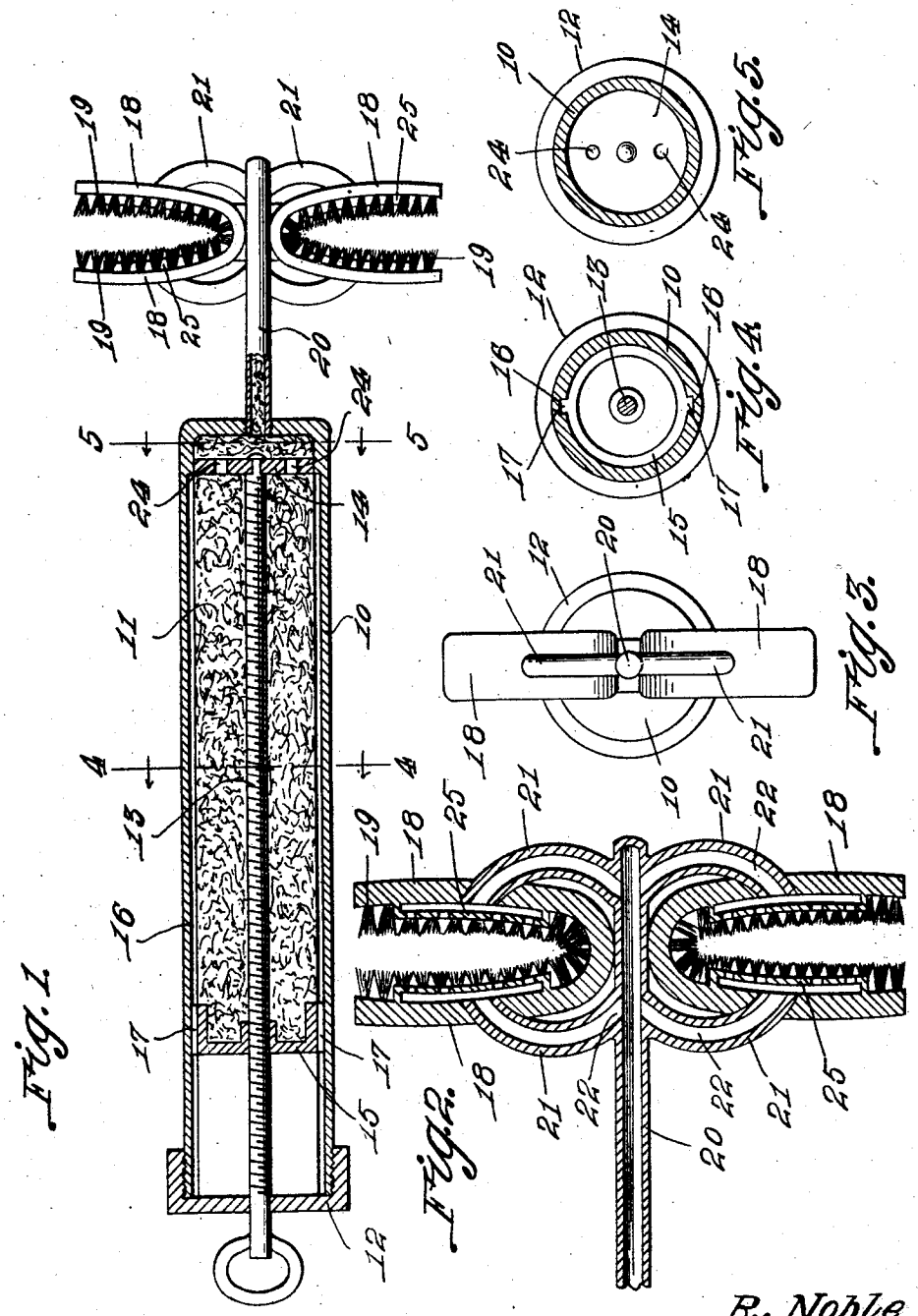

Fig. 1.

Fig. 2.

Fig. 3.

Fig. 4.

Fig. 5.

R. Noble
INVENTOR

BY Victor J. Evans
ATTORNEY

WITNESS:

Patented May 25, 1926. 1,586,262

UNITED STATES PATENT OFFICE.

ROCCO NOBLE, OF SOUTH GREENSBURG, PENNSYLVANIA.

TOOTHBRUSH.

Application filed April 8, 1925. Serial No. 21,641.

This invention relates to tooth brushes of the character including a handle of reservoir form, having a follower arranged to operate for forcing the paste onto the brush.

The chief characteristic of the invention resides in the novel construction of a brush whereby the inner and outer surfaces of the teeth can be simultaneously cleaned, and an improved means of associating the brush with the handle so that the paste can be equally distributed to both sides of the brush.

The nature and advantages of the invention will be better understood when the following detailed description is read in connection with the accompanying drawing, the invention residing in the construction, combination and arrangement of parts as claimed.

In the drawing forming part of this application, like numerals of reference indicate similar parts in the several views, and wherein:—

Figure 1 is a view of the invention partly in section.

Figure 2 is an enlarged sectional view through the brush.

Figure 3 is an end view of the brush.

Figure 4 is a sectional view on line 4—4 of Figure 1.

Figure 5 is a sectional view on line 5—5 of Figure 1.

Referring to the drawing in detail, 10 represents the handle of the brush which is of reservoir form and adapted to contain the tooth paste indicated at 11. One end of the handle is closed by a removable cap 12 which has an opening through which the screw 13 projects, the latter being arranged centrally of the handle 10 and having its inner end journalled in a perforated partition 14 disposed adjacent the other end of the handle. Threaded on the screw 13 but adapted to slide longitudinally thereof is a follower 15, and to guide this follower in its movements within the handle, the latter is formed with diametrically opposed longitudinal grooves 16 which receive doors or projections 17 forming part of the follower 15.

In accordance with the present invention, I contemplate the use of one or more brushes, each of which is substantially U-shaped in cross-section as clearly shown in Figures 1 and 2, the opposed sides 18 of each brush being provided with bristles 19, so that both the inner and outer surfaces of the teeth can be simultaneously brushed. Each portion is supported on a hollow tubular support 20 which is adapted to be threaded into an opening provided in the adjacent end of the handle 10. I have illustrated two of such brushes in the drawing, but the invention can be manufactured with one or more of said brush without departing from the spirit of the invention. Each brush is supported between oppositely curved hollow extensions 21 which project from the adjacent side of the tubular support 20, the inner ends of these extensions communicate with said support through openings 22, while the corresponding outer extremities of the curved extensions communicate with the bristles on the adjacent side of the brush through openings therein, which openings receive the adjacent ends of said extensions as clearly shown in Figure 2. In practice, the handle is supplied with paste, and the screw 13 rotated to force the follower 15 in the direction of the brush. Consequently a quantity of paste is forced through the perforations 24 of the partition 14 into the hollow support 20, and thence through the curved extensions 21 onto the bristles of the brush. The bristles on each side of the brush adjacent the point of communication with the extensions 21 are supported by a perforated plate 25, the paste passing through said perforations onto the bristles as will be readily understood. If two or more brushes are used on the one support, the paste will be equally distributed. By reason of the cross sectional configuration of each brush, it is manifest that both the inner and outer surfaces of the teeth can be simultaneously cleaned. The brush can be moved both horizontally and vertically to properly brush the teeth.

While it is believed that from the foregoing description, the nature and advantages of the invention will be readily apparent, I desire to have it understood that I do not limit myself to what is herein shown and described and that such changes may be resorted to when desired as fall within the scope of what is claimed.

Having thus described the invention, I claim:—

1. A brush including a hollow handle adapted to contain a tooth paste, a hollow tubular support projecting from one end of the handle and communicating therewith, a

brush head arranged at each side of the support and including curved hollow extensions communicating with said hollow support, and a substantially U-shaped member of a width greater than the diameter of said curved extensions and received and supported by the latter, bristles carried by the U-shaped member and adapted to be supplied with paste from said hollow support through said curved extension, and means operable within the handle for ejecting the paste therefrom onto said bristles as specified.

2. A brush including a hollow handle adapted to contain a tooth paste, a hollow tubular support projecting from one end thereof, a brush head of substantially U-shaped formation in cross section arranged at one side of the support, oppositely curved hollow extensions projecting from the support and connected with the opposite sides of the brush head, and establishing communication between the support and said brush, and means operable within the handle for forcing the paste therefrom onto the brush through said extension.

In testimony whereof I affix my signature.

ROCCO NOBLE.