March 15, 1949. M. FOX 2,464,300

HUB MEMBER FOR SWIVEL CHAIRS

Filed Dec. 12, 1946 2 Sheets-Sheet 1

Fig. 1.

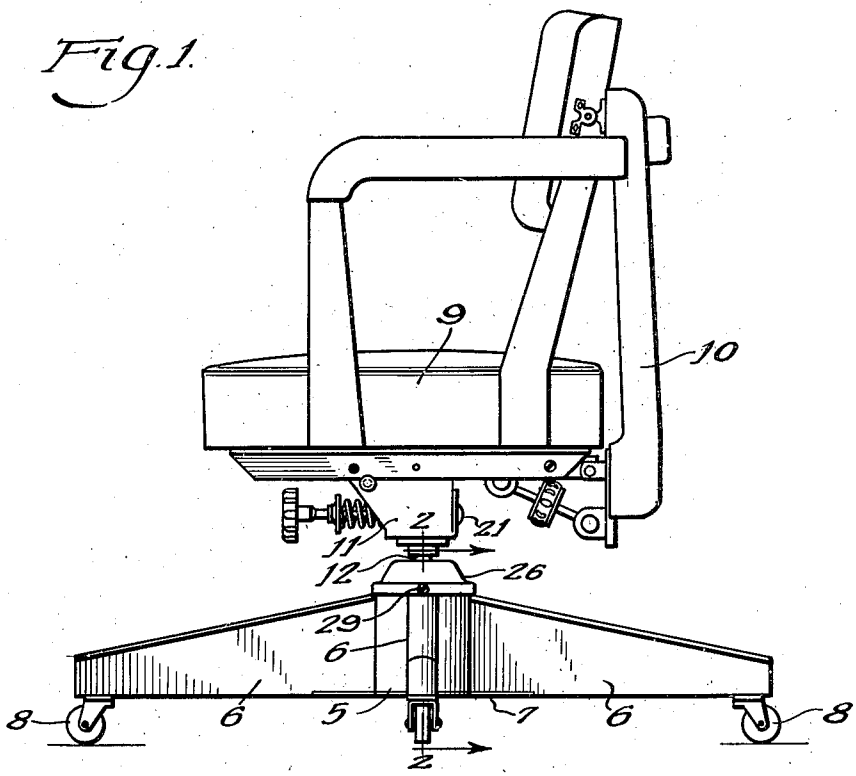

Fig. 2.

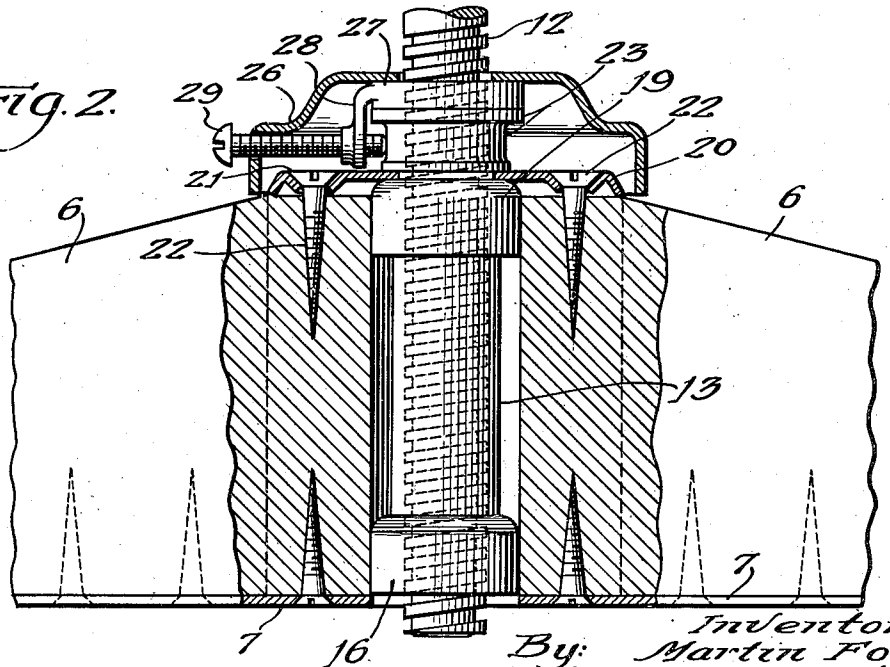

Inventor:
Martin Fox
By:
Chritton, Schneider, Merriam & Hofgren
Attorneys

March 15, 1949. M. FOX 2,464,300

HUB MEMBER FOR SWIVEL CHAIRS

Filed Dec. 12, 1946 2 Sheets-Sheet 2

Fig. 3.

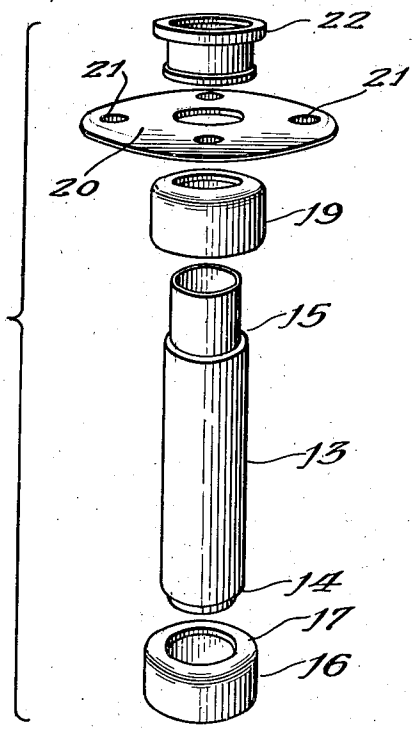

Fig. 4.

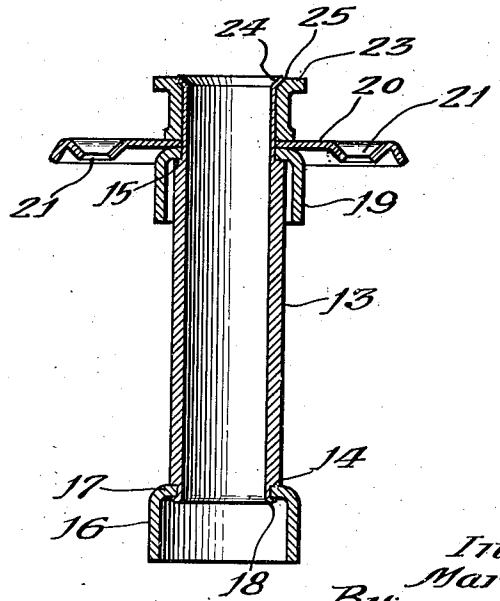

Inventor:
Martin Fox

By:
Chritton, Schroeder, Merriam & Hofgren
Attorneys

Patented Mar. 15, 1949 2,464,300

UNITED STATES PATENT OFFICE

2,464,300

HUB MEMBER FOR SWIVEL CHAIRS

Martin Fox, Chicago, Ill., assignor to The Seng Company, a corporation of Illinois

Application December 12, 1946, Serial No. 715,699

2 Claims. (Cl. 155—138)

1

This invention relates to hub members for swivel chairs.

The principal object of the invention is to provide a hub member which is formed of simple stamped and machined pieces, rather than castings.

A further object is to provide such a hub member which can be substituted for the conventional cast hub member without changing the design of a chair base.

A further object is to provide a hub member which is lighter and stronger than cast hub members, and one which is assembled in an inexpensive and easy manner.

The invention is illustrated in a preferred embodiment in the drawings, in which:

Fig. 1 is an elevational view of a swivel chair; Fig. 2 is a fragmentary sectional view taken as indicated at line 2—2 of Fig. 1; Fig. 3 is an exploded perspective view of the hub member; and Fig. 4 is a vertical central section thereof.

In the embodiment illustrated, a swivel chair has a base 5 provided with legs 6 which are secured together at their lower inner ends by means of a bottom plate 7. The legs are shown provided with conventional casters 8. A tilting chair 9, having an adjustable back 10, is carried by a head-member 11 secured to the top of a threaded spindle 12. The spindle fits into a hub member, which is the subject matter of the present invention and is mounted in and secured to the hollow base 5.

As best shown in Figs. 3 and 4, the hub assembly has a tubular portion 13, preferably formed of pipe, with its ends turned down to a reduced diameter to provide a bottom shoulder 14 and a top shoulder 15. A collar-member 16 has a flanged end 17, which fits snugly over the reduced portion of the lower end of the tube 13 and is held against the shoulder 14 by outward flaring of the tube, as indicated at 18.

The upper collar 19 is similar to the lower collar and has a flanged end which abuts against the upper shoulder 15. A top bearing plate 20 has a hollow central portion which is loosely impaled by the upper end of the tube and rests on the top of the collar 19. The plate is shown with openings 21 to receive wood screws 22, which engage the tops of the legs of the base.

A grooved ring 23 is also fitted over the upper end portion of the tube, and the upper assembly is secured together by flaring the upper end of the tube, as indicated at 24, into a chamber 25.

A top cap 26 has a central aperture which fits loosely around the spindle 12 and rests on a nut

2

27 which is threaded to the spindle. The nut has a downwardly extending arm 28, which is drilled and tapped to receive a machine screw 29, which extends loosely through an aperture in the cap 26 and projects into the groove in the ring 23, so as to prevent the chair and post from being accidentally lifted off from the base 5.

If it is desired to remove the chair and spindle, it is merely necessary to unscrew the machine screw 29 so as to disengage it from the ring 23. It will be understood that the height of the chair may be adjusted by rotating the cap member and nut with respect to the spindle 12. However, in normal operation, the spindle, cap and nut turn together with respect to the ring member 23, so that the vertical adjustment is not changed.

The foregoing detailed description has been given for clearness of understanding only, and no unnecessary limitations should be understood therefrom, for some modifications will be obvious to those skilled in the art.

I claim:

1. A hub member for a swivel chair comprising: a tube adapted to receive the threaded spindle of a chair, said tube being provided with upper and lower external abutment shoulders spaced from its ends; a lower collar member on the lower end of the tube having a flanged end abutting against said lower shoulder and gripped thereon by outward flaring of the lower end of said tube; an upper collar member on the upper end of the tube and having a flanged end abutting against said upper shoulder; a top bearing plate impaled by said tube and resting on said upper collar, said plate being adapted to be secured to a chair base; and a grooved ring surmounting said plate and upper collar on the tube and permanently secured thereto by outward flaring of the top of said tube into a chamber in said grooved ring.

2. A hub member for a swivel chair comprising: a tube having end portions turned down to a reduced diameter to afford upper and lower abutment shoulders; a lower collar member on the lower end of the tube having a flanged end abutting against said lower shoulder and gripped thereon by outward flaring of the lower end of said tube; an upper collar member on the upper end of the tube and having a flanged end abutting against said upper shoulder; a top bearing plate impaled by said tube and resting on said upper collar, said plate being adapted to be secured to a chair base; a grooved ring surmounting said plate and upper collar on the tube and permanently secured thereto by outward flaring of the

top of said tube into a chamfer in said grooved ring; a spindle nut resting on the grooved ring, said nut being provided with a downwardly extending arm which has an aperture threaded to receive a set screw; a top cap on said spindle nut, said top cap having an aperture which registers with the aperture in said arm; and a threaded chair spindle screwed through said spindle nut and extending into said tube, said spindle having a tilting chair supporting bracket at its upper end.

MARTIN FOX.

REFERENCES CITED

The following references are of record in the file of this patent:

UNITED STATES PATENTS

Number	Name	Date
1,416,693	Dawson	May 23, 1922
1,485,910	Dawson	Mar. 4, 1924
2,021,187	Tafferty	Nov. 19, 1935

Certificate of Correction

March 15, 1949.

Patent No. 2,464,300.

MARTIN FOX

It is hereby certified that errors appear in the printed specification of the above numbered patent requiring correction as follows:

Column 1, line 53, and column 2, line 39, claim 1, for the word "chamber" read *chamfer*;

and that the said Letters Patent should be read with these corrections therein that the same may conform to the record of the case in the Patent Office.

Signed and sealed this 23rd day of August, A. D. 1949.

[SEAL]

THOMAS F. MURPHY,
Assistant Commissioner of Patents.