Nov. 2, 1943. W. F. GRINSTEAD 2,333,312

TRAVELING GUIDE MEANS

Filed Nov. 25, 1941

FIG_1

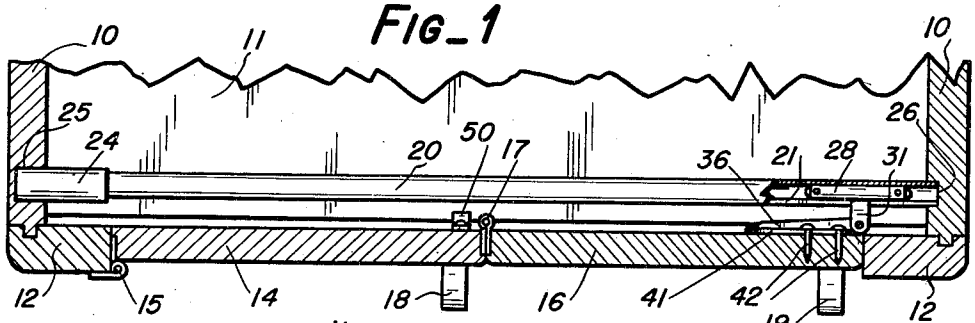

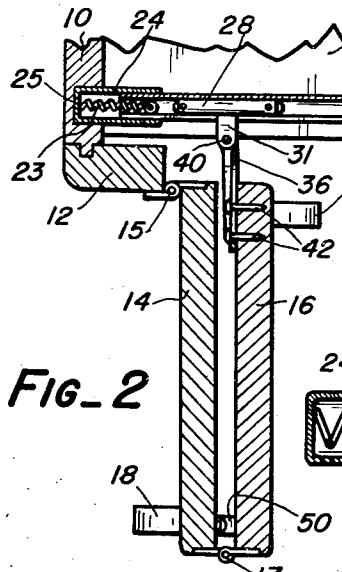

FIG_2

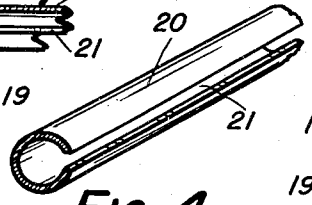

FIG_4

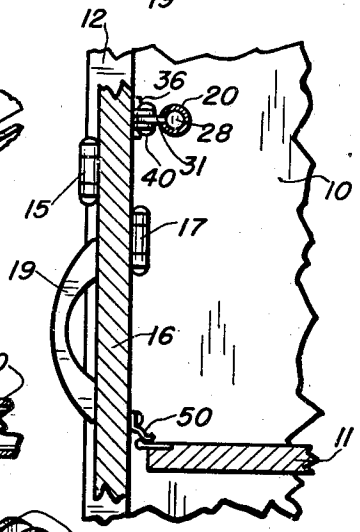

FIG_3

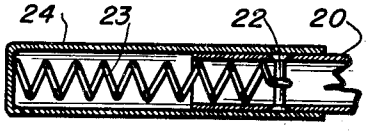

FIG_5

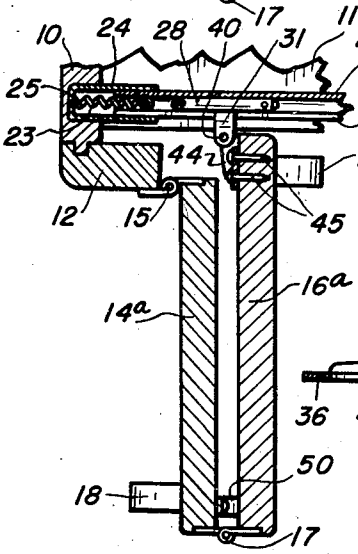

FIG_10

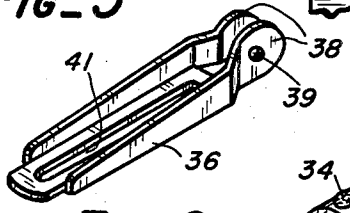

FIG_6

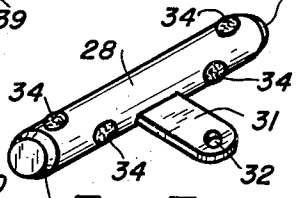

FIG_7

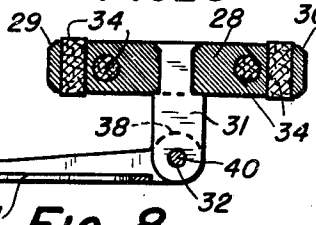

FIG_8

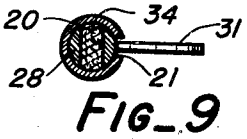

FIG_9

WILLIAM F. GRINSTEAD
INVENTOR

BY Herbert E. Smith
ATTORNEY

Patented Nov. 2, 1943 2,333,312

UNITED STATES PATENT OFFICE

2,333,312

TRAVELING GUIDE MEANS

William F. Grinstead, Opportunity, Wash.

Application November 25, 1941, Serial No. 420,372

2 Claims. (Cl. 160—206)

This invention relates to a traveling guide means for cabinets, cupboards, cases and the like, which are provided with multifold openable panels to provide access to the interior.

More particularly the invention relates to traveling guide means which are useful in connection with, for example, kitchen cabinets in which dishes, cups, and pans, as well as supplies may be stored. It is customary today to provide a cabinet opening with panel doors and often such an opening is closed by a pair of doors. When the doors are opened and are standing outwardly from the cabinet they, to a degree, occupy space in a manner that interferes with ready access to the cabinet and interfere with traffic adjacent thereto.

It is an important object of my invention to provide doors of the accordion type for such receptacles, said doors having associated therewith traveling guide means that is simple to construct, easy to install and which may be maintained in operating order with a minimum of attention.

Another object of my invention relates to the provision of an improved traveler guide for use in connection with cabinet closures which can be accommodated to a variety of circumstances that are often met in installation of such equipment.

Still another object of the invention is the provision, in a traveler guide, of self-lubricating means and lubricant storage means therefor which will insure smooth action over a long period of time.

Other objects and advantages of the invention will be more apparent during the course of the following description wherein I have set forth and described a preferred form of my invention.

It will be understood, of course, that changes and alterations in the size, shape, and the selection of materials used may be effected without departing from the spirit and scope of the invention as defined by the subjoined claims.

In the drawing, forming a part of this specification and in which like reference numerals refer to like parts throughout the same, I have shown a preferred and a modified form of my invention;

Figure 1 is a sectional, fragmentary view of a cabinet having my invention installed therein,

Figure 2 is a fragmentary, horizontal sectional view of a corner of a cabinet with the doors shown in the open position,

Figure 3 is a vertical sectional view through a portion of a cabinet,

Figure 4 is a perspective view of a section of a slotted tube employed in my invention,

Figure 5 is an enlarged detailed sectional view of resilient means employed in the installation or demounting of the mechanism of a cabinet,

Figure 6 is a perspective view of a pivot clip employed in my invention,

Figure 7 is a perspective view of a slide member that I employ in my traveling guide means for cabinets and the like,

Figure 8 is a plan view of the elements of Figures 6 and 7 as they appear in their associated relation with portions shown in section to illustrate inner construction details,

Figure 9 is a transverse sectional view of the device of Figure 7 showing the slotted tube of Figure 4 associated therewith, and

Figure 10 is a fragmentary sectional view similar to Figure 2 but illustrating a modified installation of my traveling guide means.

The numeral 10 designates the walls of a cabinet having a shelf 11 and front edge strips 12, 12 which frame the face edges of the cabinet. It is customary to provide an opening between the strips 12, 12 to permit access to the interior of the cabinet as, for example, for placing dishes on the shelf 11 and also for removing things from the cabinet that have been placed therein.

In Figure 1 the opening is closed by means of the doors 14 and 16. The door 14 is hinged at 15 to the member 12, at the left in the drawing, while the door 16 is hinged at 17 to the outer edge of the door panel 14. Handles are provided at 18 and 19.

It will be seen that by hinging the doors 14 and 16 together as at 17 and then hinging one of the doors to an upright member such as 12, that the accordion type door is produced. In their open position, referring now to Figure 2, it will be seen that the two door panels 14 and 16 are disposed in a substantially parallel plane when open, and that they lie closely along side of each other and that they extend outwardly at right angles from the main body of the cabinet.

In order to guide the movement of the doors 14 and 16 and maintain them in their desired relative position, I have provided a novel and efficient traveling guide means which comprises a tube 20 having a slot 21 running along its length. By means of a pin 22, a spring 23 is secured to one end of the tube and an enclosing ferrule 24 is slipped over the spring and the end of the tube. Thus is provided a variable length for the tube for installation purposes. Customarily a hole 25 to act as a seat for the tube will

be provided in an inner wall as 10, to the left in Figure 1, for the reception of the end of the ferrule 24. Preferably the length of the slotted tube 20, will be less than the distance between the members 10, 10 and the right member 10 also has a depression or seat 26 for the reception of the right end of the tube 20. By causing the ferrule 24 to slip onto the tube 20 a greater distance than it could normally be inserted when the spring 23 is at rest, the two ends of the tube may be inserted into their respective seats and then, by releasing the ferrule under the urgence of the spring 23, the tube would be properly and securely positioned.

A traveler guide rod 28 of cylindrical shape having slightly tapered ends 29 and 30 is adapted to be slideably fitted into the tube, so that the angularly disposed arm 31, having a hole 32, will extend outwardly through the slot 21. The size of the member 28 is sufficiently less on the inside diameter of the tube 20 so that the member will move with relative freedom. At various points through the member 28 holes are drilled and absorbent material, such as felt and the like, indicated at 34, may be inserted therein. In the drawing I have indicated these members 34 as being disposed at angles to each other so that as much of the inner surface as possible of the tube 20 will be wiped by their slightly protruding ends so that, when they are saturated with a lubricant of the nature of a light oil or other desirable substance, they will pass backwardly and forwardly in the tube and the surfaces will be lubricated while the possibility of jamming or sticking will be largely eliminated.

In the installation shown in Figure 2, the doors 14 and 16 are of an equal width. In such an installation it is advisable to use a clip 36 having the ears 38 provided with openings 39 so that a pin 40, passing through the opening 39 and the opening 32, will securely fasten the two members 31 and 36 in a pivotal manner. The member 36 has a slot 41, and two fasteners 42, 42, such as screws or the like, may be inserted therethrough to permit the longitudinal adjustment automatically of the member 36 on the inner face of door 16, due to the increase or decrease of the distance between the inward swinging edge of door 16 and the pivot pin 40.

In order to open a cabinet equipped with my invention as described and having a pair of doors such as 14 and 16, the handles 18 and 19, or either of them, may be grasped and by causing the door 14 to swing on the pin 15, door 16 will assume the position of Figure 2 swinging on its hinge at 17.

In certain installations where it may be deemed undesirable to provide the slideable clip 36, an auxiliary clip 44 may be employed and be securely anchored in position by pins 45. In the event that it is wished that the clip 44 be thus non-slideably fastened to the door it is necessary to provide a door 14*a* slightly narrower than the door 16*a* to compensate for the variation in the distance between the pivot in the hinge 17 and the pivot effected at 40.

At 50 a latch member on a door engages a latch plate on a shelf to retain the doors in the closed position in the cabinet openings.

Having thus described my invention, I claim:

1. A guide means for folding doors, said means comprising: an elongated rail member to be positioned contiguous to such folding doors, a slide member movable along said rail member to be guided in movement thereby, and means for coupling said slide member to a door to be guided, said rail having a spring-pressed end extension whereby said rail member may be self-positioned between opposed structural members at either end thereof without other means of attachment.

2. A guide means for folding doors, said means comprising: an elongated rail member to be positioned contiguous to such folding doors, a slide member movable along said rail member to be guided in movement thereby, and a lost motion coupler to join said slide member to a door and to permit the accommodation of variable spacing of such door to the rail during the movement of the door.

WILLIAM F. GRINSTEAD