(19) Europäisches Patentamt
European Patent Office
Office européen des brevets

(11) Publication number: **0 502 493 B1**

(12) # EUROPEAN PATENT SPECIFICATION

(45) Date of publication of patent specification: **21.12.94**

(51) Int. Cl.[5]: **E03F 5/04**, E04D 13/04

(21) Application number: **92103668.7**

(22) Date of filing: **04.03.92**

(54) **Clamping device for floor drains.**

(30) Priority: **07.03.91 SE 9100680**

(43) Date of publication of application:
09.09.92 Bulletin 92/37

(45) Publication of the grant of the patent:
21.12.94 Bulletin 94/51

(84) Designated Contracting States:
AT BE CH DE DK FR GB IT LI NL SE

(56) References cited:
WO-A-90/02232
DE-A- 2 507 045
DE-A- 3 007 511
DE-A- 3 445 186
GB-A- 1 583 228

(73) Proprietor: **AB SJÖBO BRUK**
Södergatan 7
S-275 00 Sjöbo (SE)

(72) Inventor: **Eskil, Andersson Leif**
Ängsgatan 1C
S-275 35 Sjöbo (SE)

(74) Representative: **Wagner, Karl Heinz et al**
H. Wagner & Co. AB
Norra Vallgatan 72
S-211 22 Malmö (SE)

Note: Within nine months from the publication of the mention of the grant of the European patent, any person may give notice to the European Patent Office of opposition to the European patent granted. Notice of opposition shall be filed in a written reasoned statement. It shall not be deemed to have been filed until the opposition fee has been paid (Art. 99(1) European patent convention).

EP 0 502 493 B1

Description

The present invention relates to a clamping device for floor drains including an inlet member (2) into which a floor covering (3) is insertable, whereby the floor covering (3) inserted into the inlet member (2) is arranged to engage a downwardly directed wall (4) of said inlet member (2),
whereby a clamping ring (5) is provided within the floor covering (3) inserted into the inlet member (2), said clamping ring (5) being arranged to press the floor covering (3) inserted into the inlet member (2) in a direction outwards against the downwardly directed wall (4) and said clamping ring (5) being split and provided with a spring (6) which is arranged to press said clamping ring (5) in a direction outwards against the floor covering (3),
whereby one side (7) of the clamping ring (5) facing outwards towards the floor covering (3) includes two surfaces (8, 9) extending at an angle relative to each other and together defining a point (10) facing outwards towards said floor covering (3),
whereby the downwardly directed wall (4) comprises a relative to the clamping ring (5) downwardly/outwardly directed wall portion (11) which at least partially is located on a higher level (H1) than the point (10) of the clamping ring (5) when said clamping ring (5) is situated in an operative position in the inlet member (2),
whereby an upper surface (9) of the two surfaces (8, 9) of the clamping ring (5) extending at an angle relative to each other defines an angle (α) with the horizontal plane (H2) which is equal to or preferably smaller than an angle (β) between the downwardly/outwardly directed wall portion (11) of the downwardly directed wall (4) and the horizontal plane (H1),
whereby the angle (α) between said upper surface (9) and the horizontal plane (H2) lies within a range of 10-55° and is preferably about 45°, and
whereby the surfaces (8, 9) of the clamping ring (5) extending relative to each other defines an angle (γ) lying within a range of 100-140°, said angle being preferably about 120°.

Clamping rings of the above type are already known from WO-A-90/02232. However, the shape of the inlet member of this floor drain does not provide for reliable attachment of the clamping ring, but said ring can glide upwards and loosen.

In DE-A-3 007 511 there is shown a floor drain having an in downwards direction widening inlet member, but the problem here is that the clamping ring in this floor drain can not expand substantially, which means that this clamping ring can not exert any lengthy great clamping force or pressure against the floor covering.

The object of the present invention is to eliminate this problem and provide a device at which the clamping ring can not glide upwards and yet exert a great clamping force or pressure against the floor covering. This is arrived at according to the invention essentially by means of the characterizing features of subsequent claim 1.

Since the inlet member has been designed with a strongly inclined downwardly/outwardly directed wall portion, it is ensured that the clamping ring is prevented from gliding upwards while it at the same time can engage the floor covering with a great pressure, because the spring can expand the clamping ring after it in compressed condition has been moved past the downwardly/outwardly directed wall portion.

The invention will be further described below with reference to the accompanying drawings, in which

- figure 1 is a section through a part of a floor drain with a device according to the invention;
- figure 2 is a section through a floor drain according to figure 1 having an extension ring connected thereto;
- figure 3 is a section through a lower portion of the extension ring of figure 2; and
- figure 4 is a part of a plan view of the floor drain of figure 1 with a clamping ring mounted therein partially in section.

In the drawings there is illustrated a floor drain 1 into the inlet member 2 of which a floor covering 3, preferably a plastic floor mat, is inserted. This floor covering 3 shall be held closely against a downwardly directed wall 4 of the inlet member 2 by means of a clamping ring 5 mounted in said inlet member 2. This clamping ring 5 is split (see fig. 4) and comprises a spring 6 which permits sufficient compression thereof in radial direction for inserting it into the inlet member 2. Thereafter, when the clamping ring 5 is released, the spring 6 will dilate or expand said clamping ring radially outwards until it engages the floor covering 3. Hereby, the clamping ring 5 will press the floor covering 3 in outwards direction against the downwardly directed wall 4 of the inlet member 2, such that the floor covering 3 closely engages said wall 4. Clamping rings 5 of this type are described in detail in our SE patent specification No. 8802915-2.

The side 7 of the clamping ring 5 facing outwards towards the floor covering 3 includes two surfaces 8 and 9 which extend at an angle relative to each other for defining a point 10 facing outwards towards the floor covering 3. The downwardly directed wall 4 of the inlet member 2 includes a wall portion 11 which is directed downwards/outwards relative to the clamping ring 5 and

this wall portion 11 is at least partially situated on a somewhat higher level H1 than the level H2 of the point 10 of the clamping ring 5 in its operative position in the inlet member 2, i.e. when it engages the seat 2a in said inlet member 2.

Furthermore, the angle α between the horizontal plane (here illustrated with the line H2 in fig. 1) and the upper surface 9 of the clamping ring 5 is equal to or somewhat smaller than the angle β between said wall portion 11 and the horizontal plane (here illustrated as the line H1 in fig. 1). It is hereby provided that the floor drain 1 is located in its intended position relative to the horizontal plane; if the floor drain 1 is located somewhat inclined relative to this intended position, the angles α and β will change correspondingly relative to the horizontal plane, but said relationship between these angles will remain unaltered. By means of the wall portion 11 and said relationship between the angles α and β, it is ensured that neither that part of the floor covering 3 located between said wall portion 11 and the point 10 of the clamping ring 5 nor said clamping ring 5 will glide upwards e.g. if the floor covering 3 shrinks, which results in a remaining sealing effect between said floor covering 3 and the inlet member 2.

As is apparent from fig. 1, the downwardly/outwardly directed wall portion 11 is located on a somewhat higher level than the point 10 of the clamping ring 5 (in fig. 1 this difference in level corresponds with the distance between the levels H1 and H2).

The angle α between the upper surface of the clamping ring 5 and the horizontal plane H2 preferably lies within a range of 10-55°. Preferably, the angle α is about 45°. A point 10 of a suitable shape is obtained if the angle γ between the upper and lower surfaces 9 and 8 of the clamping ring 5 lies within a range of 100-140°. Preferably, this angle γ is about 120°. The downwardly/outwardly directed wall portion 11 defines with the horizontal plane H1 preferably an angle β within a range of 55-65°. Preferably, the angle β is about 60°.

The inlet member 2 mentioned above may preferably also be used for mounting an extension ring 12 if the floor level is raised and one wish to maintain the existing floor drain 1 but yet provide an inlet member 2 located in level with the raised floor level. This extension ring 12 can be snapped onto the inlet member 2 of the floor drain while said extension ring 12 comprises a snap-in portion 13 which is intended to be moved at least partially beyond the downwardly/outwardly directed wall portion 11 until said snap-in portion 13 is snapped onto the inlet member 2 (see fig. 2).

The snap-in portion 13 preferably includes a point 14 which, when pressing down the extension ring 12 into the inlet member 2, is engageable with the downwardly/outwardly directed wall portion 11 or preferably with the downwardly directed wall 4 just beneath said wall portion 11. The point 14 is preferably provided at such a distance above the lower edge 15 of the extension ring 12 that the extension ring 12 in its operative function is clamped between the seat 2a and the wall portion 11 or the downwardly directed wall 4, just beneath said wall portion 11 depending on where the point 14 is engaged. This means that the extension ring 12, in its operative position, can not move in axial direction relative to the floor drain 1.

The snap-in portion 13 preferably comprises an outer side 16 with the same or similar shape as the outer side 7 of the clamping ring 5. Thus, the snap-in portion 13 may include an upper surface 17 with the same angle α to the horizontal plane as the surface 9 of the clamping ring 5 (see fig. 3). Furthermore, the outer side 16 may have a lower surface 18 and the angle between these surfaces 17, 18 can correspond with the angle γ between corresponding surfaces 8, 9 on the clamping ring 5. In the lower surface 18 there may be provided a groove 19 for a sealing ring 20 which is adapted to provide a sealing between the inlet member 2 and the outer side of the extension ring 12.

For being able to provide as good and durable a sealing between the floor covering 3 on the new floor level and the inlet member 2 of the extension ring 12, said inlet member 2 has the same shape as the inlet member 2 of the floor drain 1, i.e. comprises a downwardly/inwardly directed wall portion 11 and so on, and those parts of the inlet member 2 of the extension ring 12 which correspond with the same parts of the inlet member 2 of the floor drain 1 have for the purpose of simplification received the same reference numerals in fig. 2.

It should be mentioned that the inlet member 2 preferably comprises a downwardly bent surface 21, through which the floor covering 3 extends downwards towards the downwardly directed wall 4. This downwardly bent surface 21 can down below define a constriction 22 of the inlet member 2 and the downwardly/outwardly directed wall portion 11 can be located just beneath this constriction 22 (see fig. 1). The downwardly/outwardly directed wall portion 11 preferably transforms into a vertically or substantially vertically directed section 23 of the downwardly directed wall 4 and this section 23 preferably has a rough portion 24 situated on the same level H2 as the point 10 of the clamping ring 5.

The invention is not limited to the illustrated embodiment but may vary within the scope of the following claims. As alternative exemples it should be mentioned that the inlet member need not necessarily be circular and eventually neither the

clamping ring. The clamping ring can also be of another type than shown.

Claims

1. Clamping device for floor drains including an inlet member (2) into which a floor covering (3) is insertable, whereby the floor covering (3) inserted into the inlet member (2) is arranged to engage a downwardly directed wall (4) of said inlet member (2),
whereby a clamping ring (5) is provided within the floor covering (3) inserted into the inlet member (2), said clamping ring (5) being arranged to press the floor covering (3) inserted into the inlet member (2) in a direction outwards against the downwardly directed wall (4) and said clamping ring (5) being split and provided with a spring (6) which is arranged to press said clamping ring (5) in a direction outwards against the floor covering (3),
whereby one side (7) of the clamping ring (5) facing outwards towards the floor covering (3) includes two surfaces (8, 9) extending at an angle relative to each other and together defining a point (10) facing outwards towards said floor covering (3),
whereby the downwardly directed wall (4) comprises a relative to the clamping ring (5) downwardly/outwardly directed wall portion (11) which at least partially is located on a higher level (H1) than the point (10) of the clamping ring (5) when said clamping ring (5) is situated in an operative position in the inlet member (2),
whereby an upper surface (9) of the two surfaces (8, 9) of the clamping ring (5) extending at an angle relative to each other defines an angle (α) with the horizontal plane (H2) which is equal to or preferably smaller than an angle (β) between the downwardly/outwardly directed wall portion (11) of the downwardly directed wall (4) and the horizontal plane (H1),
whereby the angle (α) between said upper surface (9) and the horizontal plane (H2) lies within a range of 10-55° and is preferably about 45°, and
whereby the surfaces (8, 9) of the clamping ring (5) extending relative to each other defines an angle (γ) lying within a range of 100-140°, said angle being preferably about 120°,
characterized in
that the downwardly/outwardly directed wall portion (11) defines with the horizontal plane (H1) an angle (β) lying within a range of 55-65°, said angle being preferably about 60°, and
that the spring (6) permits sufficient compression of the clamping ring (5) in radial direction for insertion of said clamping ring into the inlet member (2) until the point (10) thereof is located below the level (H1) of said wall portion (11), whereafter the spring (6) may dilate or expand the clamping ring (5) outwards in radial direction until said clamping ring engages the floor covering (3).

2. Device according to claim 1, **characterized in** that the inlet member (2) comprises a downwardly curved surface (21) which defines a constriction (22) of said inlet member (2), that the downwardly/outwardly directed wall portion (11) is situated beneath the constriction (22) and that the downwardly/outwardly directed wall portion (11) down below transforms into a vertically or substantially vertically directed section (23) of the downwardly directed wall (4), which section (23) preferably comprises a rough portion (24) located on the same level (H2) as the point (10) of the clamping ring (5).

3. Device according to claim 1 or 2, whereby an extension ring (12) can be moved down into the inlet portion (2) of the floor drain (1), **characterized in** that the extension ring (12) can be snapped onto the inlet member (2) of the floor drain (1) while said extention ring (12) includes a snap-in portion (13) which is arranged to cooperate with the outwardly/downwardly directed wall portion (11) and which is adapted to be moved in downwards direction at least partially beyond said outwardly/downwardly directed wall portion (11) until the snap-in portion (13) is snapped in position.

4. Device according to claim 3, **characterized in** that the snap-in portion (13) of the extension ring (12) has a point (14) for engaging the downwardly/outwardly directed wall portion (11) of the inlet member (2) or preferably a downwardly directed wall (4) of said inlet member (2) just beneath said wall portion (11).

5. Device according to claim 4, **characterized in** that the point (14) of the snap-in portion (13) is provided at such a distance above a lower edge (15) on the extension ring (12) that said ring, in an operative position wherein it engages at seat (2a) in the inlet member (2), is clamped between said seat (2a) and the downwardly/outwardly directed wall portion (11) or that part of the downwardly directed wall (4) which is located just beneath said wall portion (11) engaged by said point (14).

6. Device according to claims 3-5, whereby the extension ring (12) comprises an inlet member (2) into which a floor covering (3) is insertable, whereby the floor covering (3) inserted into the inlet member (2) is arranged to engage a downwardly directed wall (4) of said inlet member (2),
whereby a clamping ring (5) is provided within the floor covering (3) inserted into the inlet member (2) of the extension ring (12), said clamping ring (5) being adapted to press the floor covering (3) inserted into the inlet member (2) of the extension ring (12) in a direction outwards against the downwardly directed wall (4) and said clamping ring (5) being split and provided with a spring (6) which is adapted to press said clamping ring (5) in a direction outwards against the floor covering (3),
whereby one side (7) of the clamping ring (5) facing outwards towards the floor covering (3) includes two surfaces (8, 9) extending at an angle relative to each other and together defining a point (10) facing outwards towards said floor covering (3),
whereby the downwardly directed wall (4) comprises a relative to the clamping ring (5) downwardly/outwardly directed wall portion (11) which at least partially is located on a higher level (H1) that the point (10) of the clamping ring (5) when said clamping ring (5) is situated in an operative position in the inlet member (2),
whereby an upper surface (9) of the two surfaces (8, 9) extending at an angle relative to each other of the clamping ring (5), which is insertable into the inlet member (2) of the extension ring (12), defines an angle (α) with the horizontal plane (H2) which is equal to or preferably smaller than an angle (β) between the downwardly/outwardly directed wall portion (11) of the downwardly directed wall (4) and the horizontal plane (H1),
whereby the angle (α) between said upper surface (9) and the horizontal plane (H2) lies within a range of 10-55° and is preferably about 45°, and
whereby the surfaces (8, 9) of the clamping ring (5) extending relative to each other defines an angle (γ) lying within a range of 100-140°, said angle being preferably about 120°,
characterized in
that the downwardly/outwardly directed wall portion (11) defines with the horizontal plane (H1) an angle (β) lying within a range of 55-65°, said angle being preferably about 60°, and
that the spring (6) permits sufficient compression of the clamping ring (5) in radial direction for insertion of said clamping ring into the inlet member (2) of the extension ring (12) until the point (10) thereof is located below the level (H1) of said wall portion (11), whereafter the spring (6) may dilate or expand the clamping ring (5) outwards in radial direction until said clamping ring engages the floor covering (3).

Patentansprüche

1. Festklemmvorrichtung für Bodenabläufe mit einem Einlauf (2), in den ein Bodenbelag (3) einführbar ist, wobei der in den Einlauf (2) einführbare Bodenbelag (3) in Eingriff mit einer abwärts gerichteten Wand (4) des Einlaufs (2) gebracht wird,
wobei ein Klemmring (5) innerhalb des in den Einlauf (2) eingeführten Bodenbelags (3) angeordnet ist, welcher Klemmring (5) vorgesehen ist, den in den Einlauf (2) eingeführten Bodenbelag (3) nach aussen gegen die abwärts gerichtete Wand (4) zu drücken, und weiterhin geschlitzt ist sowie eine Feder (6) aufweist, die dazu dient, den Klemmring (5) nach aussen gegen den Bodenbelag (3) zu drücken,
wobei eine nach aussen gekehrte, dem Bodenbelag (3) zugewandte Seite (7) des Klemmrings (5) zwei Flächen (8, 9) aufweist, die im Winkel zueinander verlaufen und zusammen einen nach aussen gegen den Bodenbelag (3) gerichteten Punkt (10) bestimmen,
wobei die abwärts gerichtete Wand (4) einen im Verhältnis zum Klemmring (5) nach unten/aussen gerichteten Wandteil (11) aufweist, der wenigstens teilweise auf einem höheren Niveau (H1) liegt als der Punkt (10) des Klemmrings (5), wenn sich letzterer in einer Betriebsstellung im Einlauf (2) befindet,
wobei eine obere Fläche (9) der im Winkel zueinander verlaufenden beiden Flächen (8, 9) des Klemmrings (5) einen Winkel (α) zur horizontalebene (H2) bildet, welcher einem Winkel (β) zwischen dem nach unten/aussen gerichteten Wandteil (11) der abwärts gerichteten Wand (4) und der Horizontalebene (H1) gleich ist oder vorzugsweise kleiner ist als der Winkel (β),
wobei der Winkel (α) zwischen der oberen Fläche (9) und der Horizontalebene (H2) im Bereich von 10-55° liegt und vorzugsweise etwa 45° beträgt, und
wobei die im Verhältnis zueinander verlaufenden Flächen (8, 9) des Klemmrings (5) einen Winkel (γ) im Bereich von 100-140° bestimmen, der vorzugsweise etwa 120° beträgt,
dadurch gekennzeichnet,
dass der nach unten/aussen gerichtete Wandteil (11) zur Horizontalebene (H1) einen Winkel

(β) im Bereich von 55-65° bildet, der vorzugsweise etwa 60° beträgt, und
dass die Feder (6) eine hinreichende Zusammendrückung des Klemmrings (5) in radialem Sinne gestattet zum Einführen des Klemmrings in den Einlauf (2) bis der Punkt (10) desselben unterhalb des Niveaus (H1) des Wandteils (11) zu liegen kommt, wonach die Feder (6) den Klemmring (5) nach aussen in radialem Sinne ausdehnen oder expandieren kann, bis der Klemmring mit dem Bodenbelag (3) eingreift.

2. Vorrichtung nach Anspruch 1, **dadurch gekennzeichnet**, dass der Einlauf (2) eine nach unten gekrümmte Fläche (21) aufweist, die eine Einschnürung (22) des Einlaufs (2) bestimmt, dass der nach unten/aussen gerichtete Wandteil (11) unterhalb der Einschnürung (22) angeordnet ist und dass der nach unten/aussen gerichtete Wandteil (11) weiter unten in einen senkrechten oder im wesentlichen senkrechten Abschnitt (23) der abwärts gerichteten Wand (4) übergeht, der vorzugsweise einen rauhen Teil (24) aufweist, er auf dem gleichen Niveau (H2) wie der Punkt (10) des Klemmrings (5) liegt.

3. Vorrichtung nach Anspruch 1 oder 2, bei der ein Verlängerungsring (12) in den Einlauf (2) des Bodenablaufs (1) hinunterführbar ist, **dadurch gekennzeichnet**, dass der Verlängerungsring (12) auf den Einlauf (2) des Bodenablaufs (1) aufschnappbar ist, indem der Verlängerungsring (12) einen Schnappteil (13) aufweist, der zum Zusammenwirken mit dem nach aussen/unten gerichteten Wandteil (11) und zum Bewegen in Abwärtsrichtung wenigstens teilweise an dem nach aussen/unten gerichteten Wandteil (11) worbei vorgesehen ist, bis der Schnappteil (13) in die beabsichtigte Lage einschnappt.

4. Vorrichtung nach Anspruch 3, **dadurch gekennzeichnet**, dass der Schnappteil (13) des Verlängerungsrings (12) einen punkt (14) aufweist, an dem der Schnappteil mit dem nach unten/aussen gerichteten Wandteil (11) des Einlaufs (2) oder vorzugsweise mit einer abwärts gerichteten Wand (4) des Einlaufs (2) gerade unterhalb des Wandteils (11) eingreift.

5. Vorrichtung nach Anspruch 4, **dadurch gekennzeichnet**, dass der Punkt (14) des Schnappteils (13) in einem solchen Abstand oberhalb einer unteren Kante (15) des Verlängerungsrings (12) angebracht ist, dass der Ring in einer Betriebsstellung, in welcher er auf einem Sitz (2a) im Einlauf (2) aufsitzt, zwischen dem genannten Sitz (2a) und dem nach unten/aussen gerichteten Wandteil (11) oder demjenigen Teil der abwärts gerichteten Wand (4) eingeklemmt ist, der gerade unterhalb des an dem genannten Punkt (14) anliegenden Wandteils (11) liegt.

6. Vorrichtung nach Anspruch 3-5, in welcher der Verlängerungsring (12) einen Einlauf (2) aufweist, in den ein Bodenbelag (3) einführbar ist, wobei der in den Einlauf (2) eingeführte Bodenbelag (3) vorgesehen ist, mit einer abwärts gerichteten Wand (4) des Einlaufs (2) einzugreifen,
wobei ein Klemmring (5) innerhalb des in den Einlauf (2) des Verlängerungsring (12) eingeführten Bodenbelags (3) angeordnet ist, welcher Klemmring (5) vorgesehen ist, den in den Einlauf (2) des Verlängerungsrings (12) eingeführten Bodenbelag (3) nach aussen gegen die abwärts gerichtete Wand (4) zu drücken, und weiterhin geschlitzt ist und eine Feder (6) aufweist, die dazu dient, den Klemmring (5) nach aussen gegen den Bodenbelag (3) zu drücken,
wobei die nach aussen gekehrte, den Bodenbelag (3) zugewandte Seite (7) des Klemmrings (5) zwei Flächen (8, 9) aufweist, die im Winkel zueinander verlaufen und zusammen einen nach aussen gegen den Bodenbelag (3) gerichteten Punkt (10) bestimmen,
wobei die abwärts gerichtete Wand (4) einen im Verhältnis zum Klemmring (5) nach unten/aussen gerichteten Wandteil (11) aufweist, der wenigstens teilweise auf einem höheren Niveau (H1) liegt als der Punkt (10) des Klemmrings (5), wenn sich letzterer in einer Betriebsstellung im Einlauf (2) befindet,
wobei die obere Fläche (9) der im Winkel zueinander verlaufenden beiden Flächen (8, 9) des Klemmrings (5), der in den Einlauf (2) des Verlängerungsrings (12) einführbar ist, einen Winkel (α) zur Horizontalebene (H2) bildet, welcher einem Winkel (β) zwischen dem nach unten/aussen gerichteten Wandteil (11) der abwärts gerichteten Wand (4) und der Horizontalebene (H1) gleich ist oder vorzugsweise kleiner ist als der Winkel (β),
wobei der Winkel (α) zwischen der oberen Fläche (9) und der Horizontalebene (H2) im Bereich von 10-55° liegt und vorzugsweise etwa 45° beträgt, und
wobei die im Verhältnis zueinander verlaufenden Flächen (8, 9) des Klemmrings (5) einen Winkel (γ) im Bereich von 100-140° bestimmen, der vorzugsweise etwa 120° beträgt,
dadurch gekennzeichnet,
dass der nach unten/aussen gerichtete Wandteil (11) zur Horizontalebene (H1) einen Winkel

(β) im Bereich von 55-65° bildet, der vorzugsweise etwa 60° beträgt, und
dass die Feder (6) eine hinreichende Zusammendrückung des Klemmrings (5) in radialem Sinne gestattet zum Einführen des Klemmrings in den Einlauf (2) des Verlängerungsrings (12) bis der Punkt (10) desselben unterhalb des Niveaus (H1) des Wandteils (11) zu liegen kommt, wonach die Feder (6) den Klemmring (5) nach aussen in radialem Sinne ausdehnen oder expandieren kann, bis der Klemmring mit dem Bodenbelag (3) eingreift.

Revendications

1. Dispositif de serrage pour avaloirs du plancher, comportant une partie d'entrée (2) dans laquelle peut être inséré un revêtement du plancher (3) susceptible d'être mis en prise avec une paroi (4), dirigée vers le bas, de ladite partie d'éntrée (2),
une bague de serrage (5) étant arrangée à l'intérieur du revêtement du plancher (3) inséré dans la partie d'entrée (2), ladite bague de serrage (5) servant à serrer la revêtement du plancher (3) inséré dans ladite partie d'entrée (2) vers l'extérieur contre la paroi (4) dirigée vers le bas, et ladite bague de serrage (5) étant fendue et munie d'un ressort (6) susceptible de serrer ladite bague de serrage (5) vers l'extérieur contre de revêtement du plancher (3),
le côté (7) de la bague de serrage (5) qui est orienté à l'extérieur vers le revêtement du plancher (3), comportant deux surfaces (8, 9) s'étendant à un angle l'une par rapport à l'autre et définissant ensemble un point (10) orienté à l'extérieur vers ledit revêtement du plancher (3),
la paroi (4) dirigée vers le bas comportant une partie de paroi (11) dirigée vers le bas/en dehors par rapport à la bague de serrage (5) et située, au moins partiellement, à un niveau (H1) plus haut que le point (10) de la bague de serrage (5) lorsque ladite bague de serrage (5) occupe une position opératoire dans la partie d'entrée (2),
la surface supérieure (9) des deux surfaces (8, 9) de la bague de serrage (5) qui s'étendent à un angle l'une par rapport à l'autre, définissant un angle (α) au plan horizontal (H2) qui est égal à ou, de préférence, plus petit que l'angle (β) entre la partie de paroi (11) dirigée vers le bas/en dehors de la paroi (4) dirigée vers le bas et le plan horizontal (H1),
l'angle (α) entre ladite surface supérieure (9) et le plan horizontal (H2) étant compris dans une gamme de 10-55°; de préférence, ledit angle est d'environ 45°, et
les surfaces (8, 9) de la bague de serrage (5) qui s'étendent l'une par rapport à l'autre, définissant un angle (γ) compris dans une gamme de 100-140°; de préférence, ledit angle est d'environ 120°,
caractérisé en ce que
la partie de paroi (11) dirigée vers le bas/en dehors définit au plan horizontal (H1) un angle (β) compris dans une gamme de 55-65°, de préférence, ledit angle est d'environ 60°, et
que le ressort (6) permet une compression suffisante de la bague de serrage (5) en sens radial pour faire introduire ladite bague de serrage dans la partie d'éntrée (2) jusqu'à ce que le point (10) de celle-ci se trouve au-dessous du niveau (H1) de ladite partie de paroi (11), ensuite le ressort (6) peut dilater ou expandre la bague de serrage (5) vers l'extérieur en sens radial jusqu'à ce que ladite bague de serrage soit mise en prise avec le revêtement du plancher (3).

2. Dispositif selon la revendication 1, **caractérisé** en ce que la partie d'entrée (2) comporte une surface (21) courbée vers le bas qui définit un retrécissement (22) de ladite partie d'entrée (2), que la partie de paroi (11) dirigée vers le bas/en dehors est située au-dessous du retrécissement (22) et que la partie de paroi (11) dirigée vers le bas/en dehors est transformée, à un point plus bas, en un segment (23) dirigée verticalement ou essentiellement verticalement de la paroi (4) dirigée vers le bas, ledit segment (23) comportant, de préférence, une portion rugueuse (24) qui est située au même niveau (H2) que le point (10) de la bague de serrage (5).

3. Dispositif selon la revendication 1 ou 2, dans lequel une bague de rallonge (12) peut être inséré dans la partie d'entrée (2) de l'avaloir du plancher (1), **caractérisé** en ce que la bague de rallonge (12) peut être clipsée sur la partie d'entrée (2) de l'avaloir du plancher (1) puisque ladite bague de rallonge (12) comprend une portion clipsable (13) qui est agencée de façon à coopérer avec la partie de paroi (11) dirigée vers le bas/en dehors et qui peut être déplacée vers le bas, au moins partiellement, passant devant ladite partie de paroi (11) dirigée vers le bas/en dehors jusqu'à ce que la portion clipsable (13) soit clipsée en position.

4. Dispositif selon la revendication 3, **caractérisé** en ce que la portion clipsable (13) de la bague de rallonge (12) présente un point (14) susceptible d'être mis en contact avec la partie de

paroi (11), dirigée vers le bas/en dehors, de la partie d'entrée (2) ou, de préférence, avec une paroi (4) dirigée vers le bas de ladite partie d'entrée (2) précisement au-dessous de ladite partie de paroi (11).

5. Dispositif selon la revendication 4, **caractérisé** en ce que le point (14) de la portion clipsable (23) est placé à une telle distance au-dessus d'un bord inférieur (15) de la bague de rallonge (12) que ladite bague, dans une position opératoire dans laquelle la bague est en prise avec un siège (2a) dans la partie d'entrée (2), soit serrée entre ledit siège (2a) et la partie de paroi (11) dirigée vers le bas/en dehors ou la partie de paroi (4) dirigée vers le bas qui est située précisement au-dessous de ladite partie de paroi (11) où celle-ci est en contact avec ledit point (14).

6. Dispositif selon les revendications 3 à 5, dans lequel la bague de rallonge (12) comporte une partie d'entrée (2) dans laquelle peut être inséré un revêtement du plancher (3), ledit revêtement du plancher (3) inséré dans la partie d'entrée (2) étant susceptible d'être mis en prise avec une paroi (4) dirigée vers le bas de ladite partie d'entrée (2),
une bague de serrage (5) étant arrangée à l'intérieur du revêtement du plancher (3) inséré dans la partie d'entrée (2) de la bague de rallonge (12), ladite bague de serrage (5) servant à serrer le revêtement du plancher (3) inséré dans la partie d'entrée (2) de la bague de rallonge (12) vers l'extérieur contre la paroi (4) dirigée vers le bas, et ladite bague de serrage (5) étant fendue et munie d'un ressort (6) susceptible de serrer ladite bague de serrage (5) vers l'extérieur contre le revêtement du plancher (3),
le côté (7) de la bague de serrage (5) qui est orienté à l'extérieur vers le revêtement du plancher (3) comportant deux surfaces (8, 9) s'étendant à un angle l'une par rapport à l'autre et définissant ensemble un point (10) orienté à l'extérieur vers ledit revêtement du plancher (3),
la paroi (4) dirigée vers le bas comportant une partie de paroi (11) dirigée vers le bas/en dehors par rapport à la bague de serrage (5) et située, au moins partiellement, à un niveau (H1) plus haut que le point (10) de la bague de serrage (5) lorsque ladite bague de serrage (5) occupe une position opératoire dans la partie d'entrée (2),
la surface supérieure (9) des deux surfaces (8, 9) qui s'étendent à un angle l'une par rapport à l'autre dans la bague de serrage (5) susceptible d'être insérée dans la partie d'entrée (2) de la bague de rallonge (12), définissant un angle (α) au plan horizontal (H2) qui est égal à ou, de préférence, plus petit qu'un angle (β) entre la partie de paroi (11) dirigée vers le bas/en dehors de la paroi (4) dirigée vers le bas et le plan horizontal (H1),
l'angle (α) entre ladite surface supérieure (9) et le plan horizontal (H2) étant compris dans une gamme de 10-55 °; de préférence, cet angle est d'environ 45 °, et
les surfaces (8, 9) de la bague de serrage (5) qui s'étendent l'une par rapport à l'autre, définissant un angle (γ) qui est compris dans une gamme de 100-140 °; de préférence, cet angle est d'environ 120 °,
caractérisé en ce que
la parti de paroi (11) dirigée vers le bas/en dehors définit au plan horizontal (H1) un angle (β) qui est compris dans une gamme de 55-65 °; de préférance, cet angle est d'environ 60 °, et
que le ressort (6) permet une compression suffisante de la bague de serrage (5) en sens radial pour faire introduire ladite bague de serrage dans la partie d'entrée (2) de la bague de rallonge (12) jusqu'à ce que le point (10) de celle-ci se trouve au-dessous du niveau (H1) de ladite partie de paroi (11), ensuite le ressort (6) peut dilater et expandre la bague de serrage (5) vers l'extérieur en sens radial jusqu'à ce que ladite bague de serrage soit en prise avec le revêtement du plancher (3).

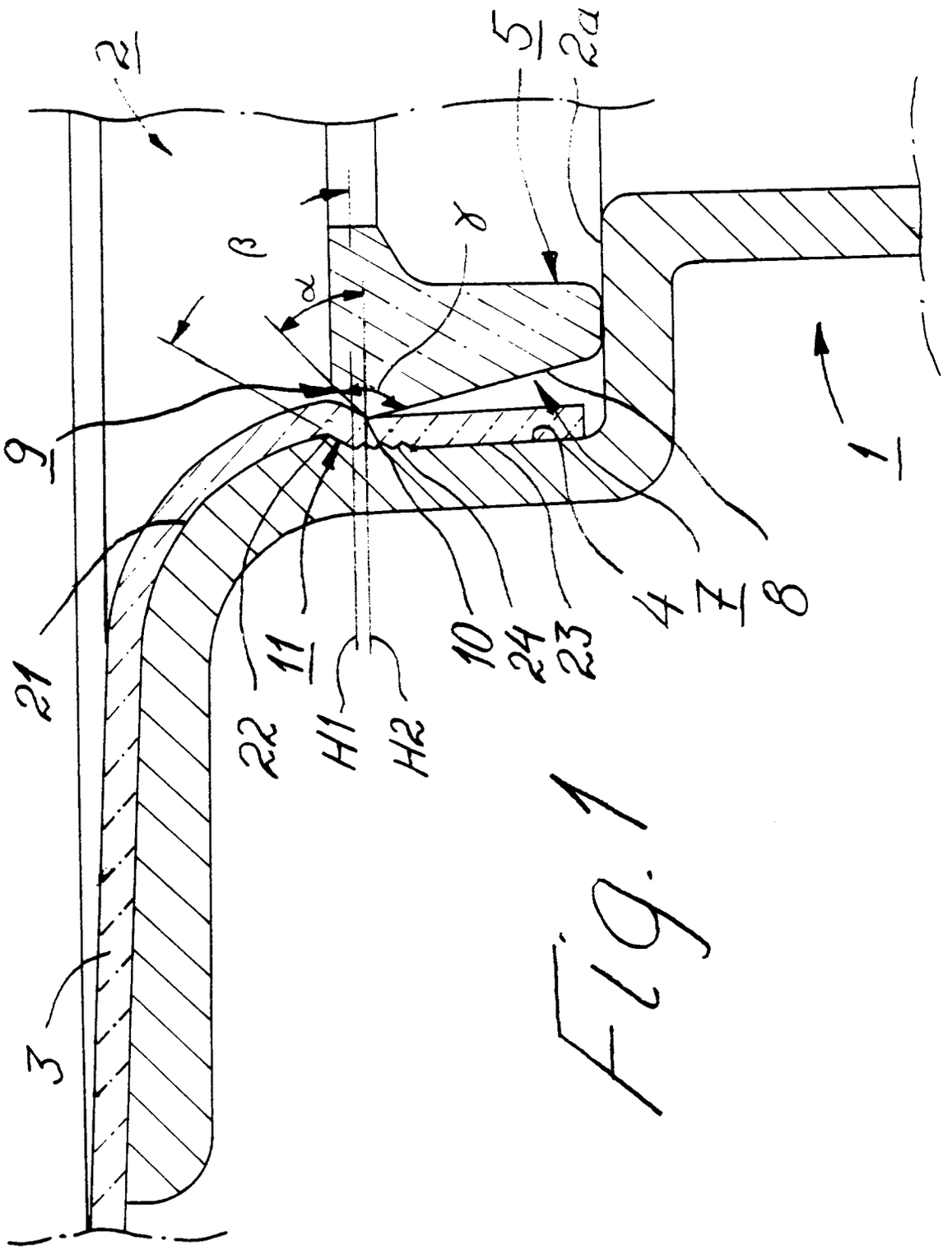

Fig. 1

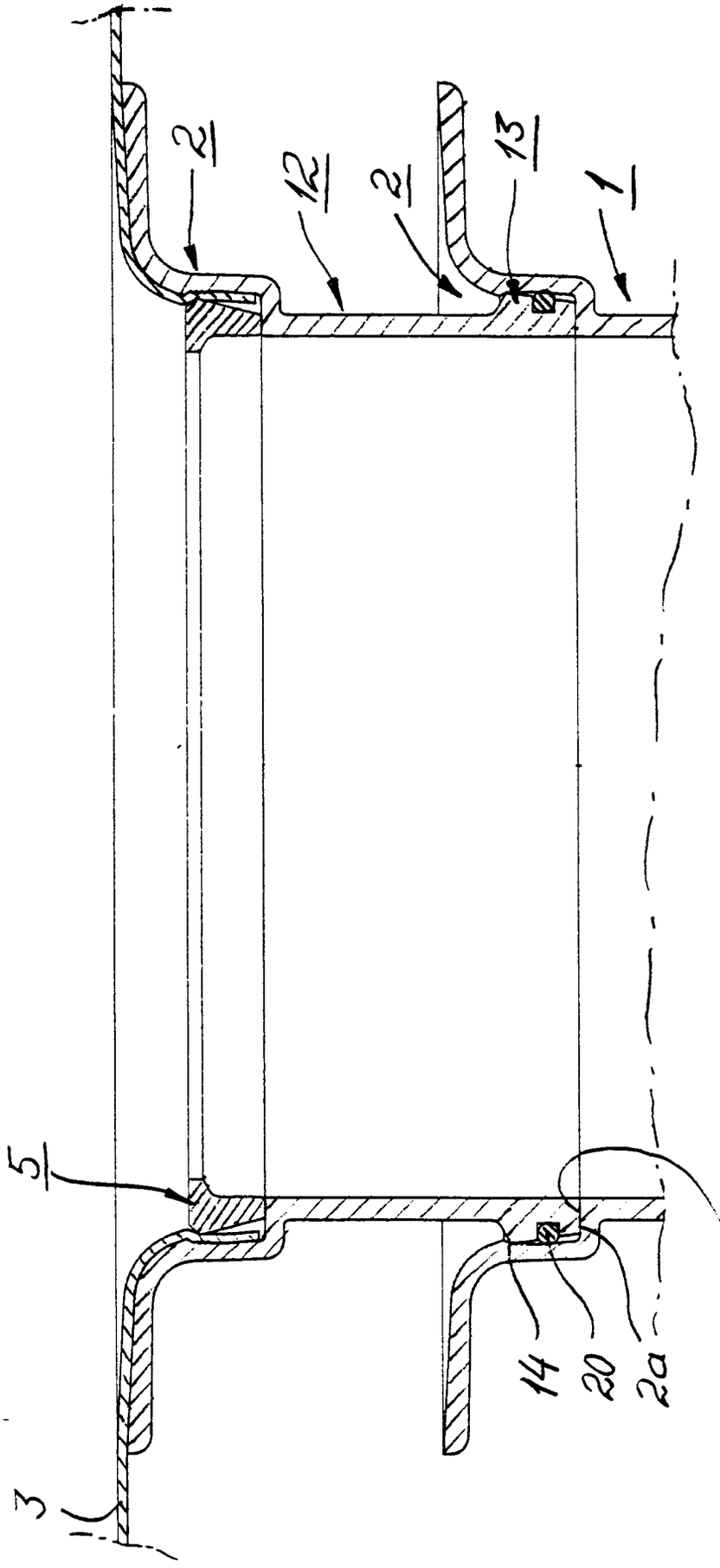

Fig. 2

Fig. 4

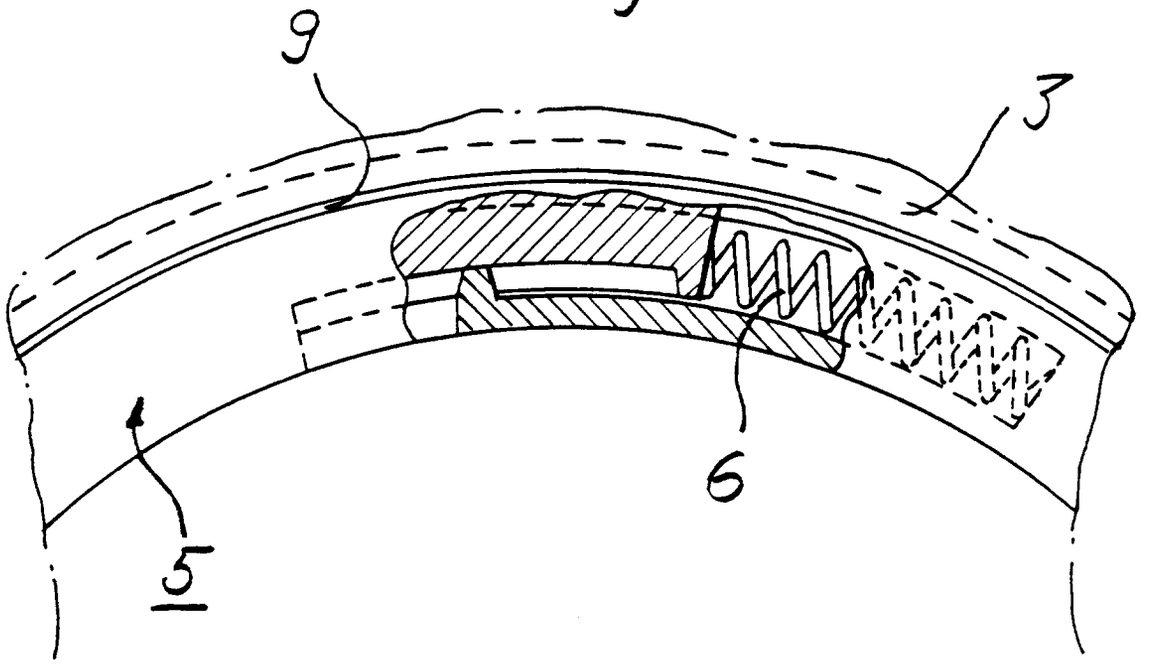

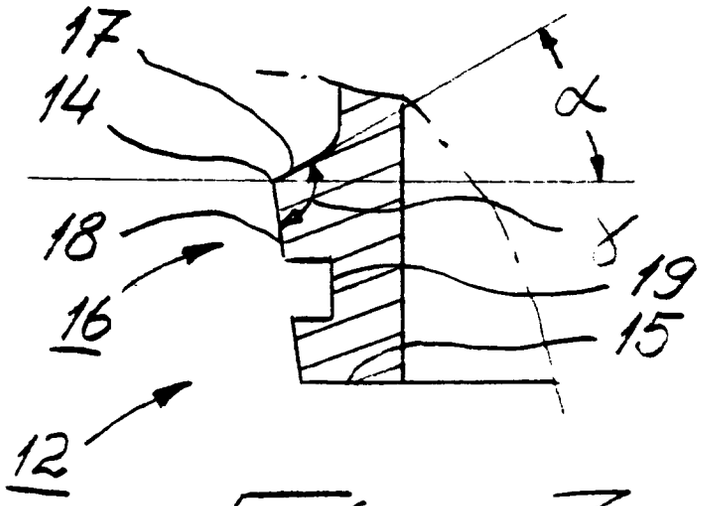

Fig. 3