US 20150076767A1

(19) **United States**

(12) **Patent Application Publication**

Benedict, III

(10) **Pub. No.: US 2015/0076767 A1**

(43) **Pub. Date: Mar. 19, 2015**

(54) **SIMPLIFIED CLOSABLE TYPE GAME BOARD DEVICE FOR BASIC SYMBOL AND ALPHANUMERIC RECOGNITION**

(71) Applicant: **Milner Benedict, III**, Tampa, FL (US)

(72) Inventor: **Milner Benedict, III**, Tampa, FL (US)

(21) Appl. No.: **13/987,907**

(22) Filed: **Sep. 16, 2013**

Publication Classification

(51) **Int. Cl.**
A63F 3/00 (2006.01)

(52) **U.S. Cl.**
CPC ***A63F 3/00574*** (2013.01); ***A63F 3/0023*** (2013.01); *A63F 2003/00233* (2013.01)
USPC **273/266**

(57) **ABSTRACT**

My child educational board game, "Word Battle Simplified", embodies a configuration requiring players to approach the fundamentals of literacy and numeracy by calling out spaces in a competition of take away so that, once all prepositioned and hidden game elements on opponents' targeted regions are found, the last player with symbol marked blocks in his or her playing field wins.

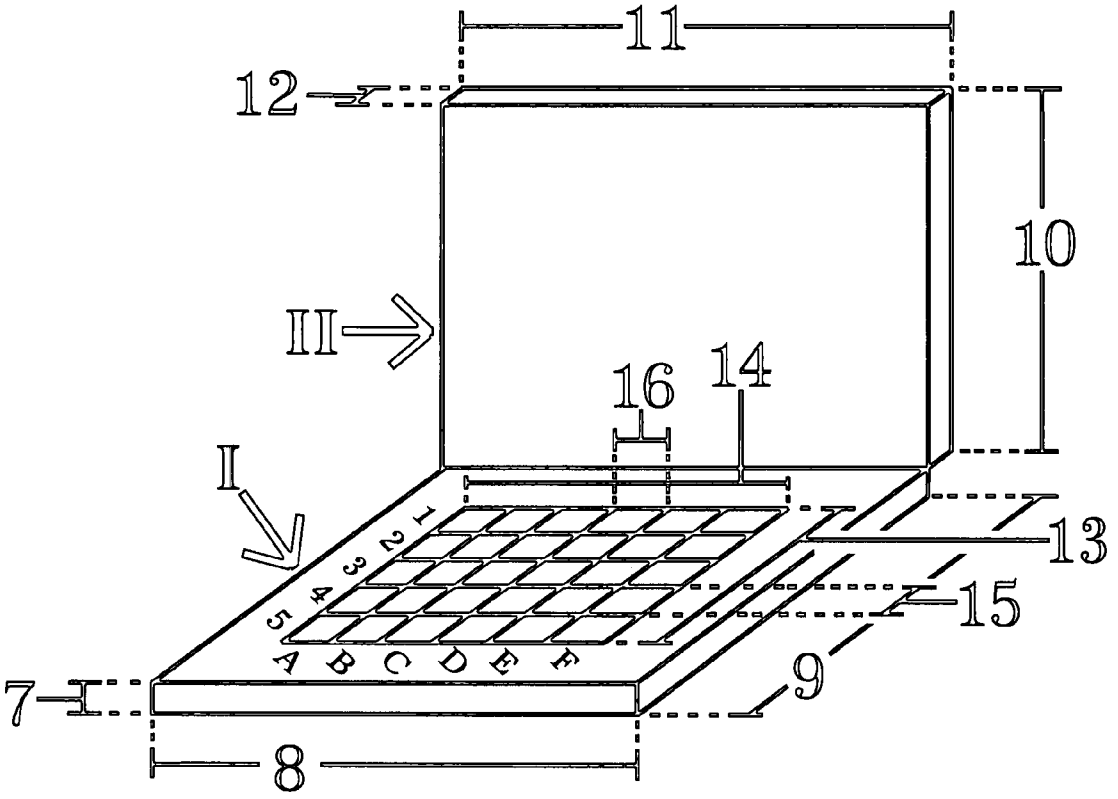

(C) 2013 Milner Benedict III

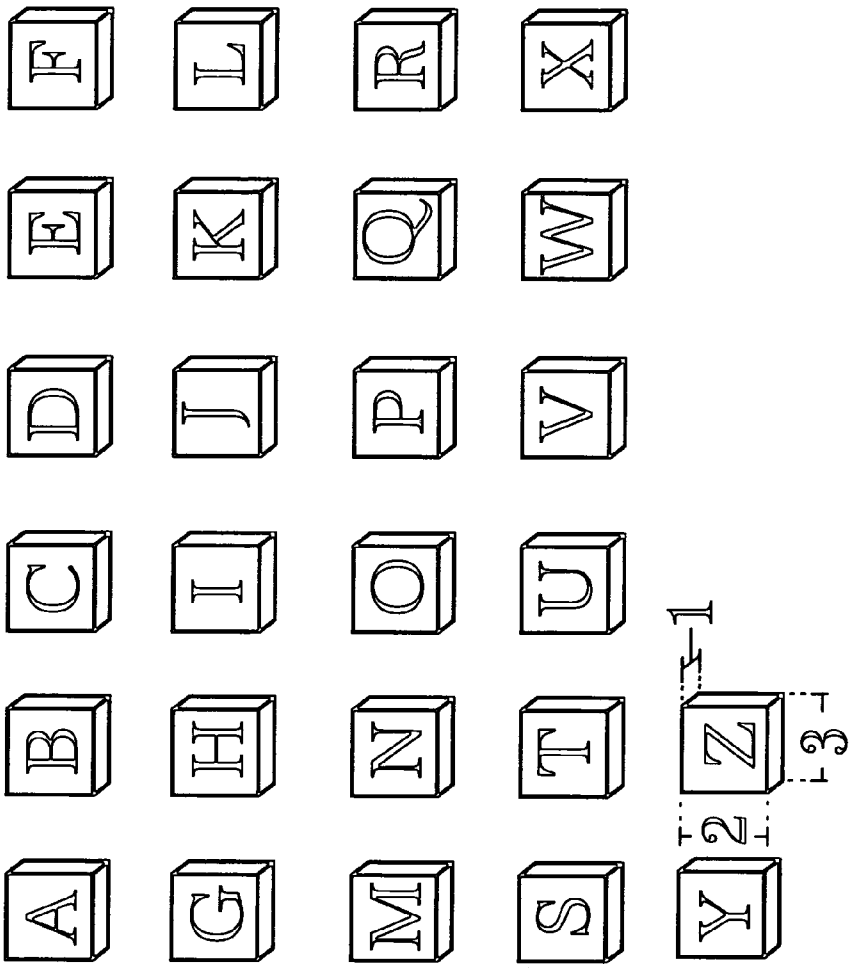

FIG. 1

(C) 2013 Milner Benedict III

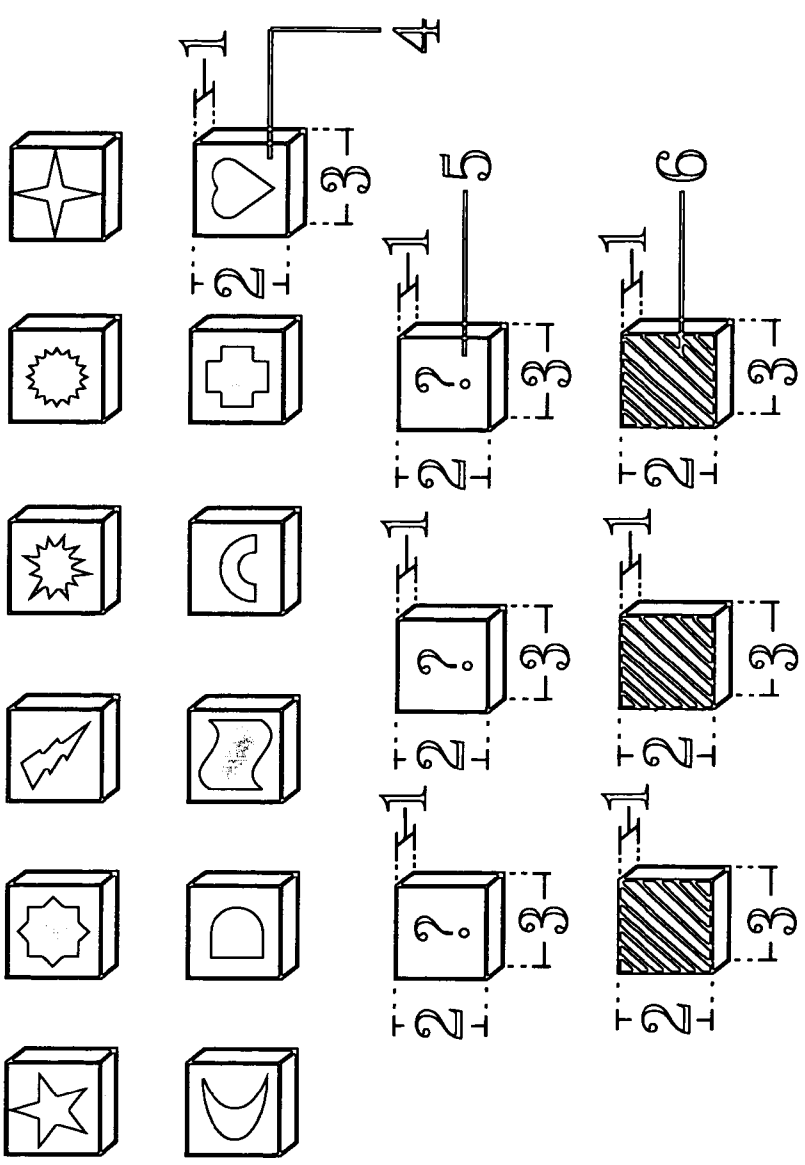

FIG. 2

(C) 2013 Milner Benedict III

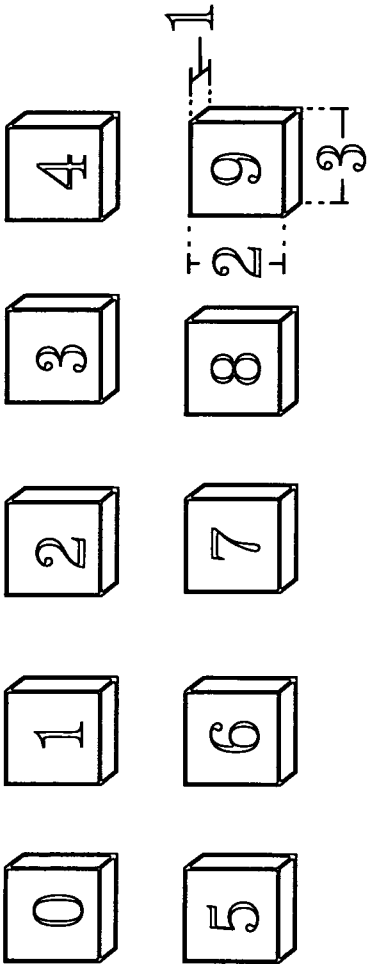

FIG. 3

(C) 2013 Milner Benedict III

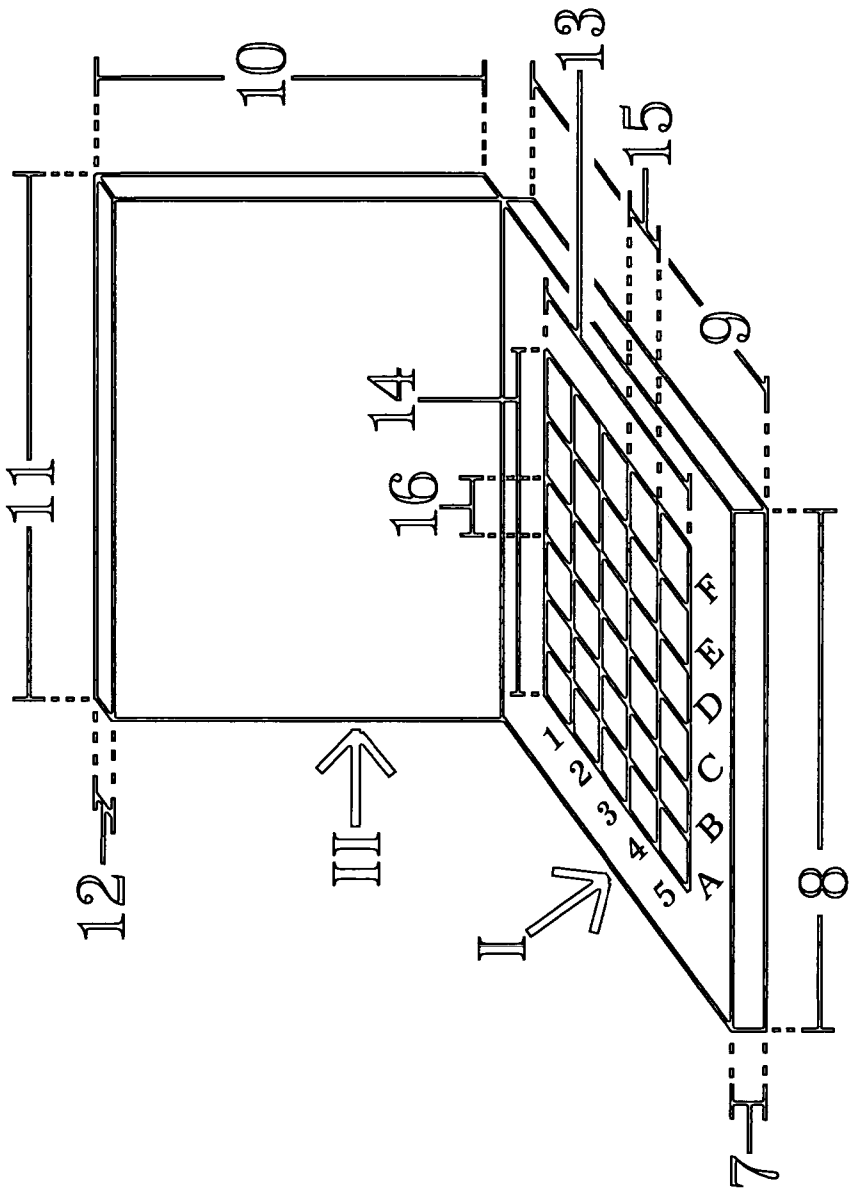

FIG. 4

(C) 2013 Milner Benedict III

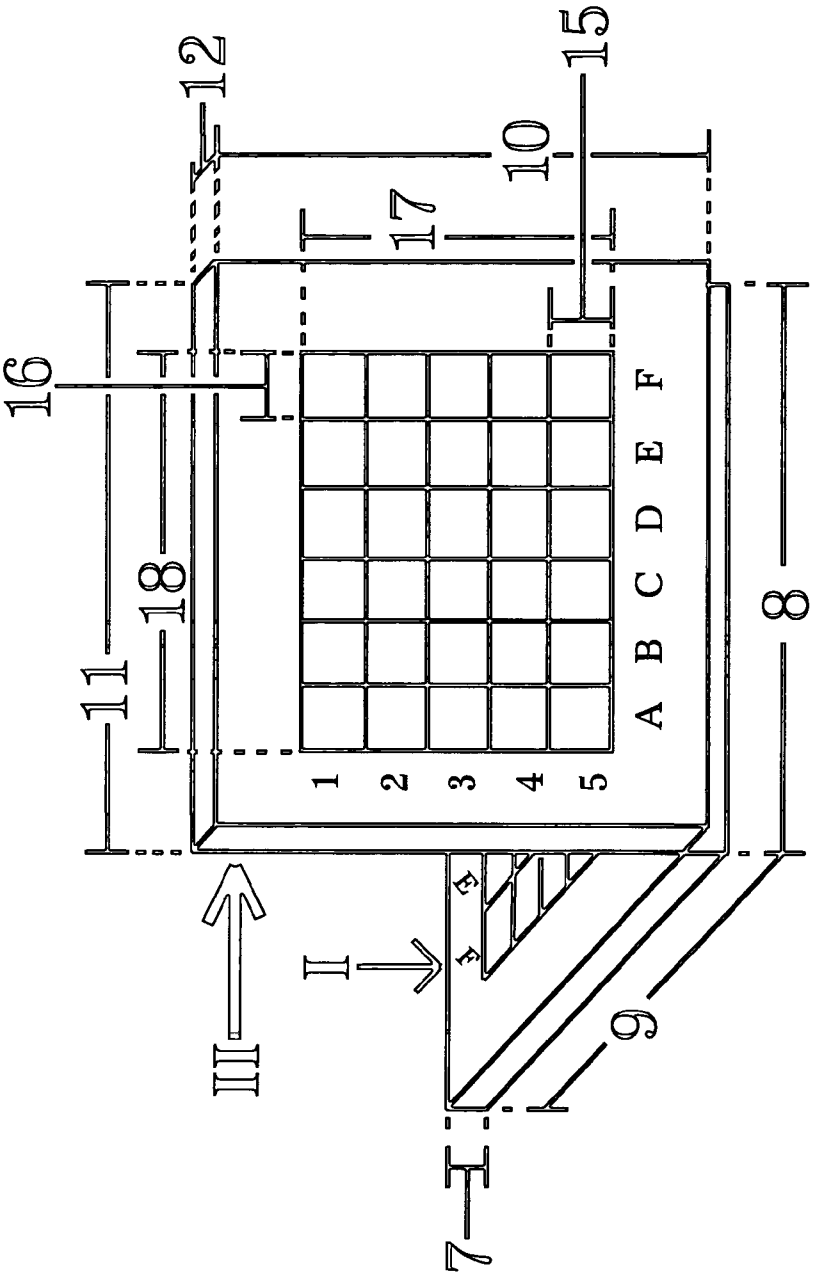

FIG. 5

(C) 2013 Milner Benedict III

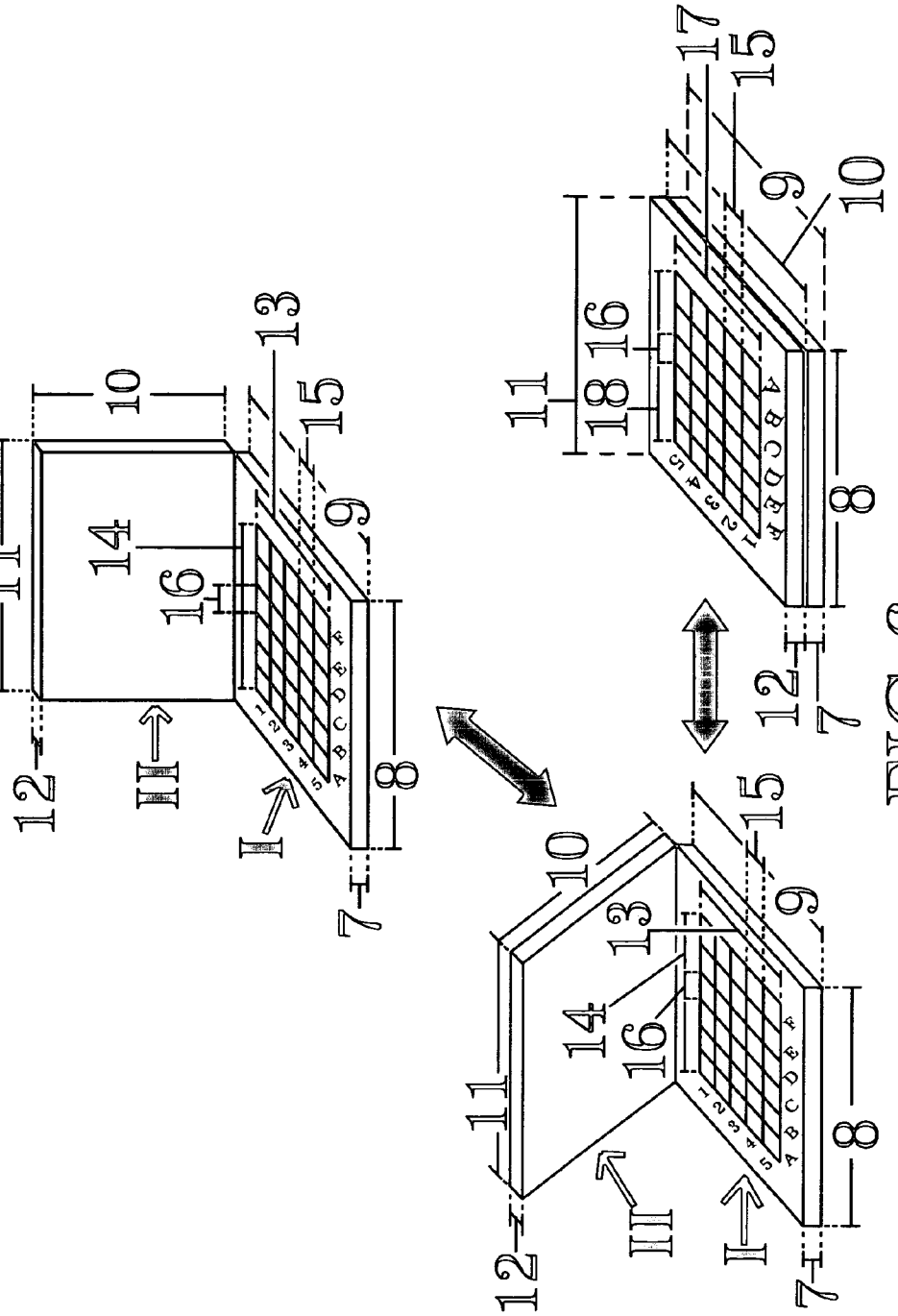

FIG. 6

(C) 2013 Milner Benedict III

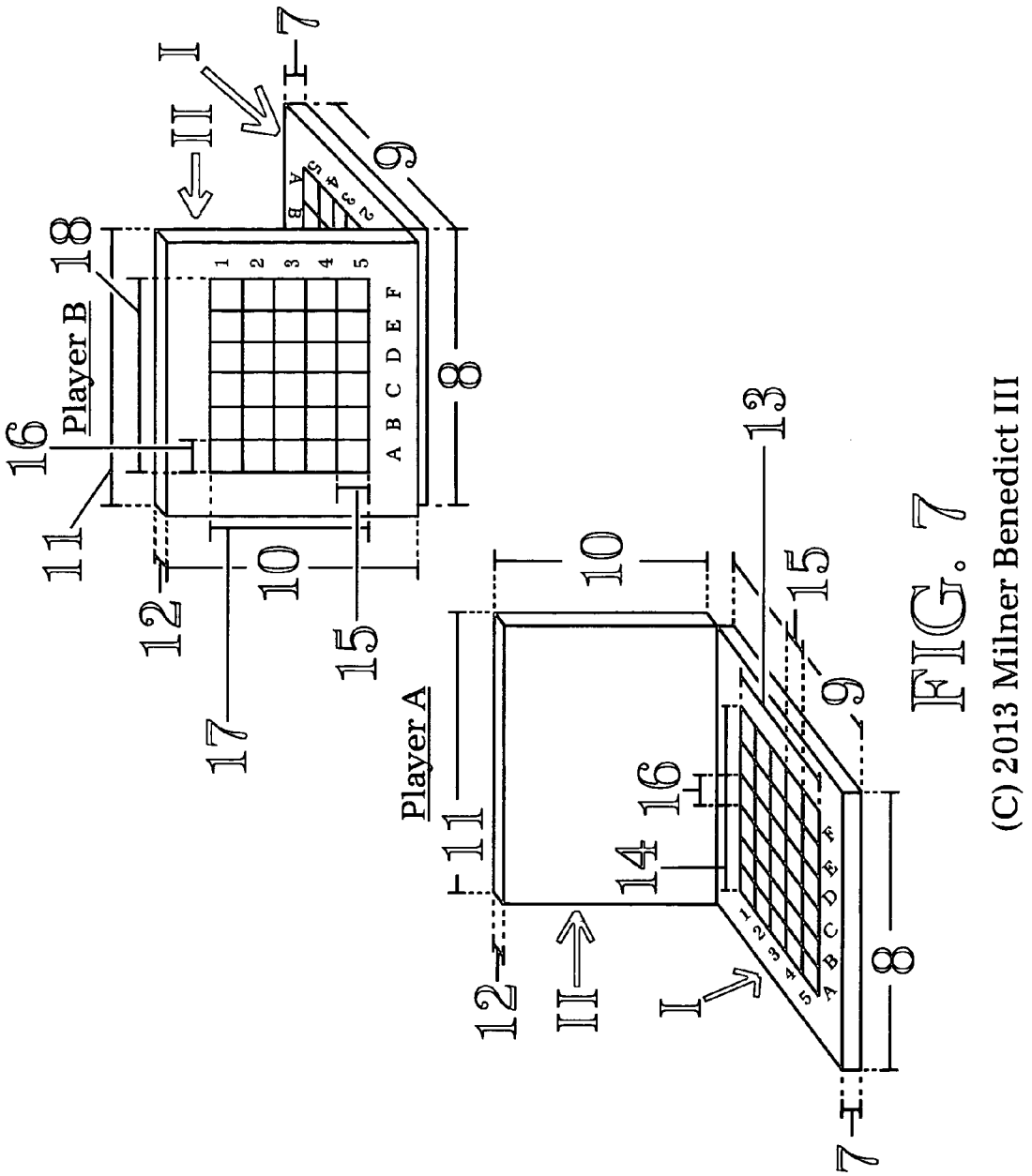

FIG. 7

(C) 2013 Milner Benedict III

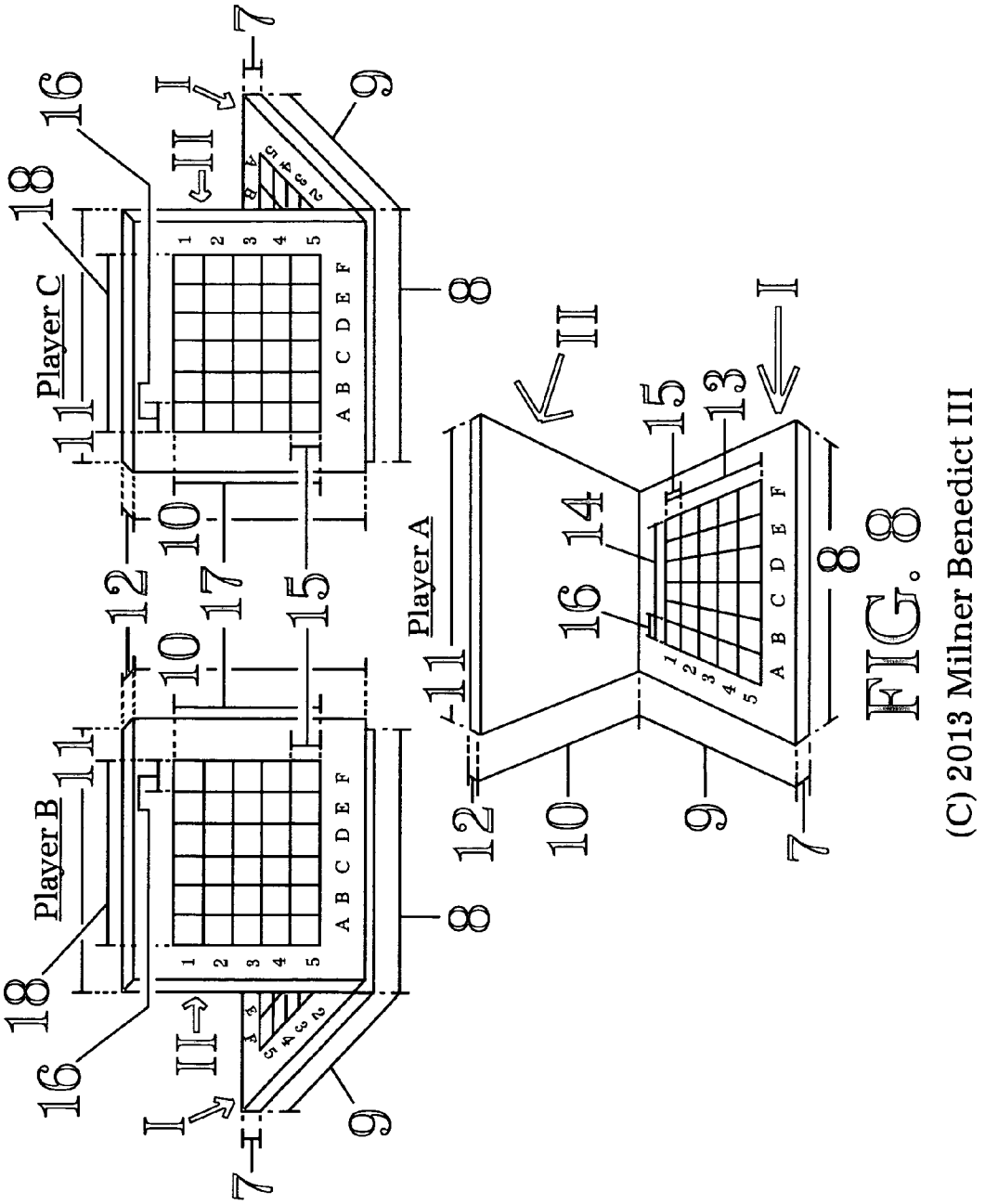

FIG. 8

(C) 2013 Milner Benedict III

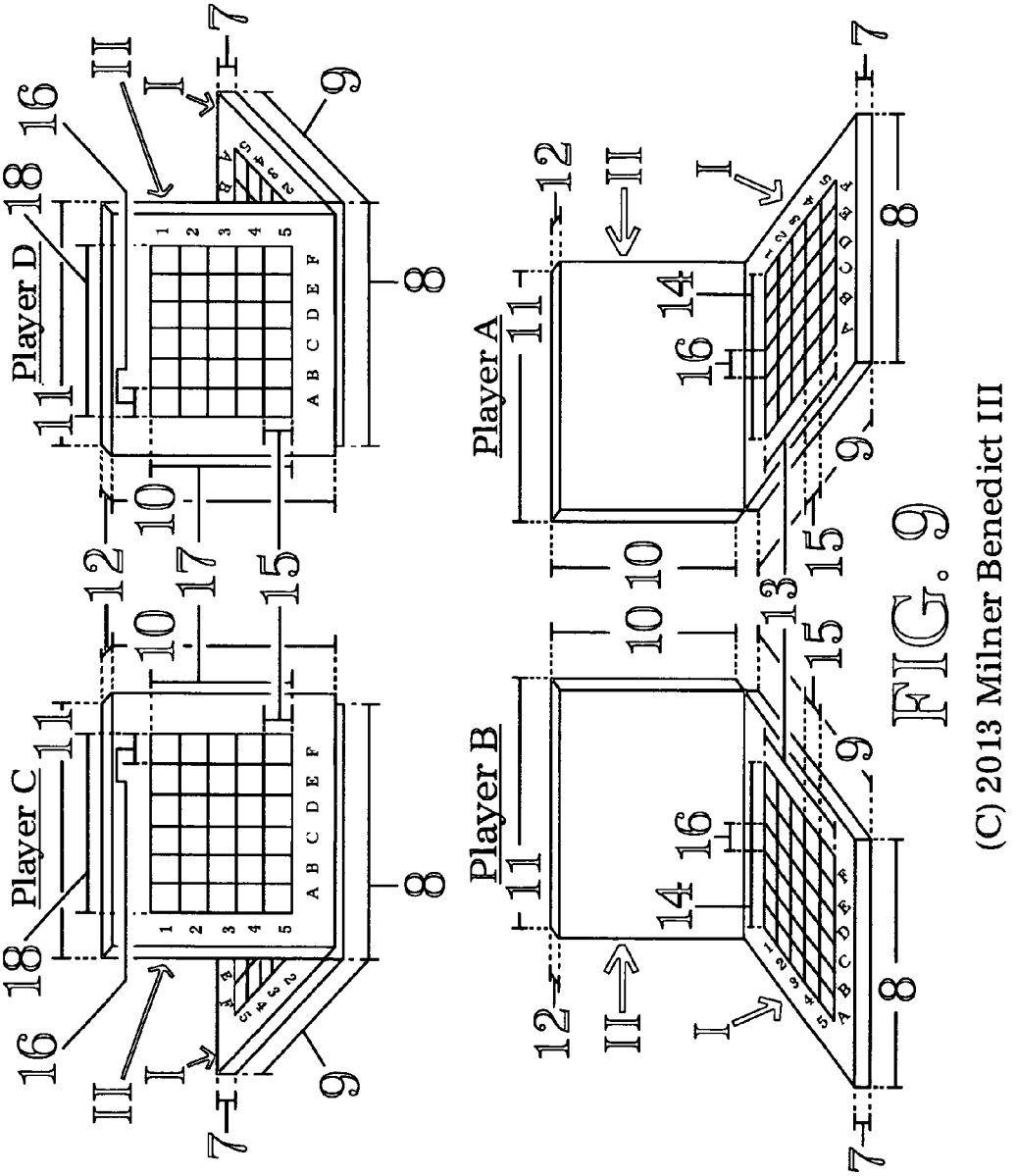

FIG. 9

(C) 2013 Milner Benedict III

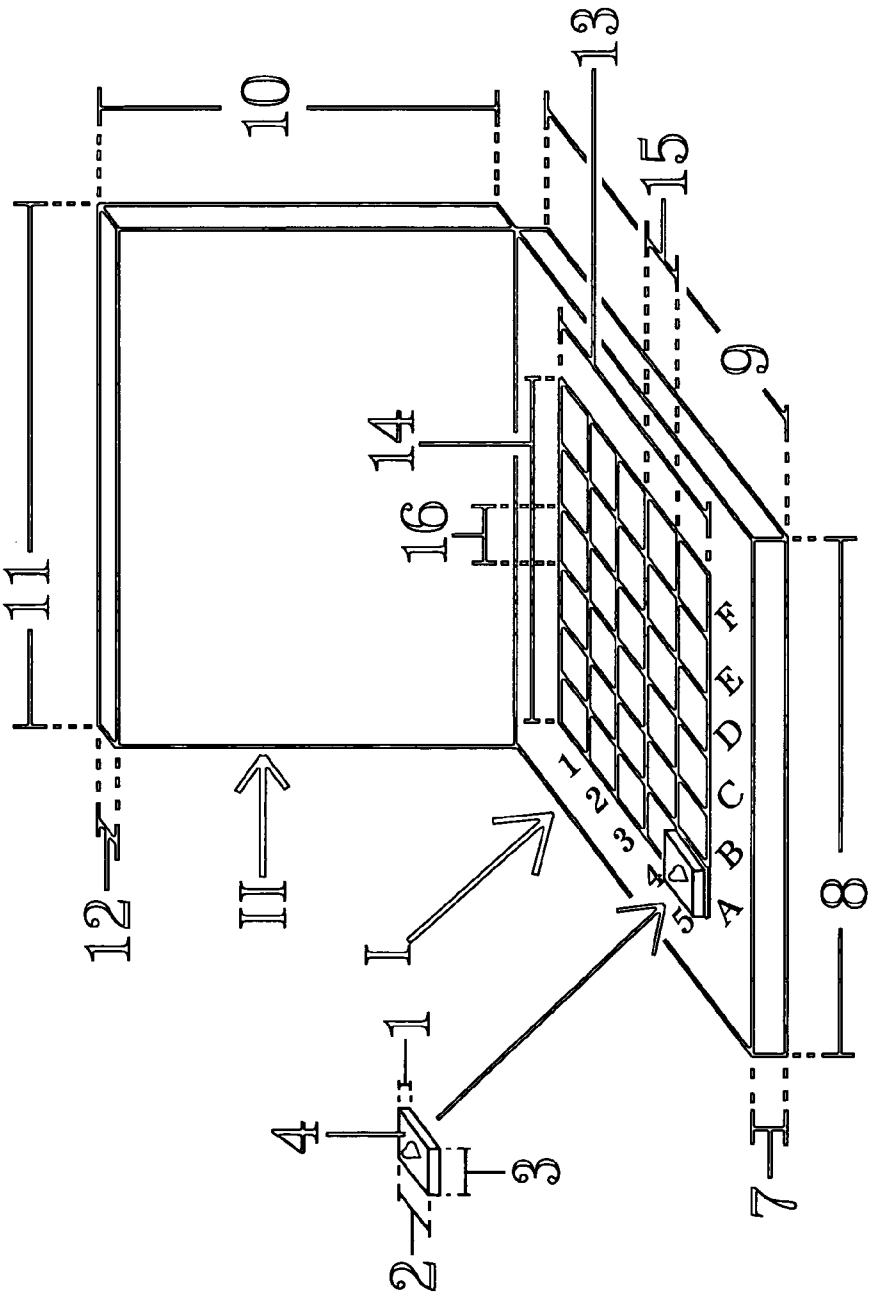

FIG. 10

(C) 2013 Milner Benedict III

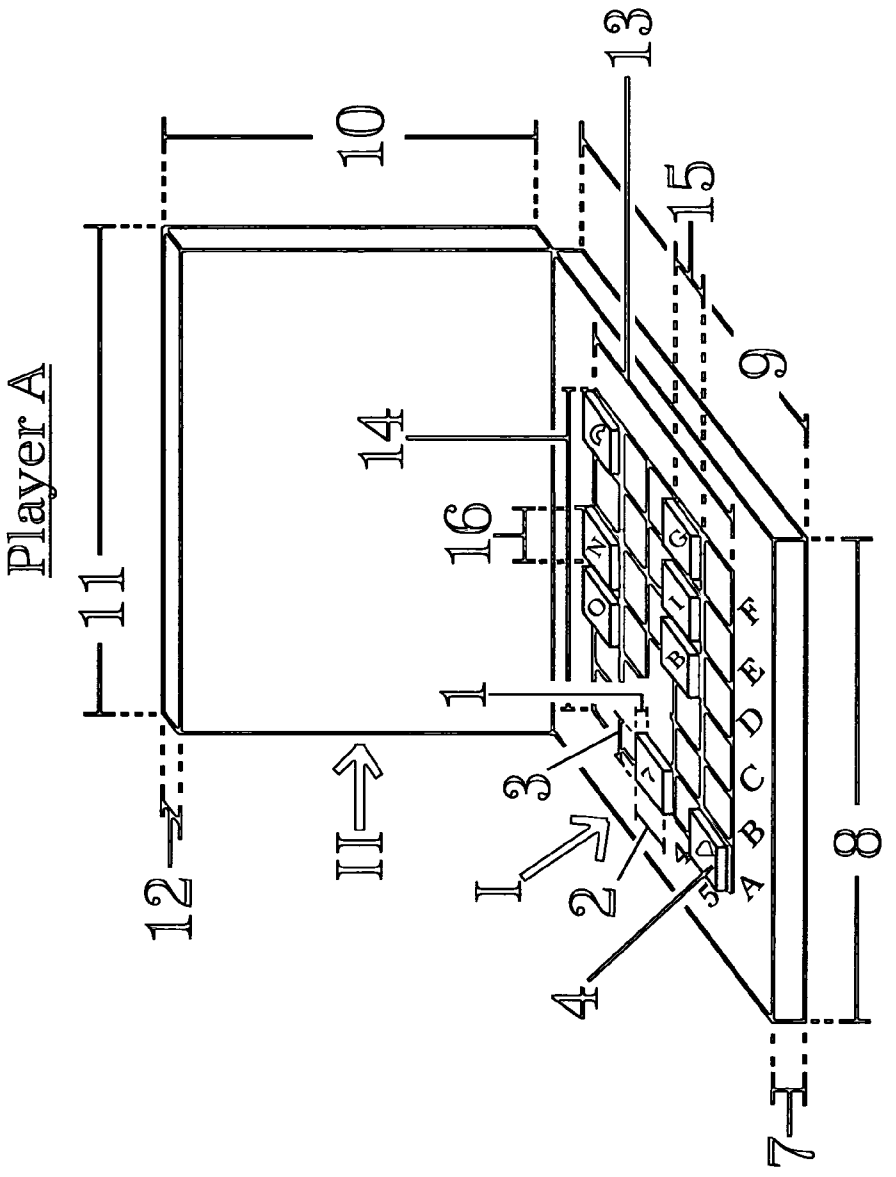

FIG. 11

(C) 2013 Milner Benedict III

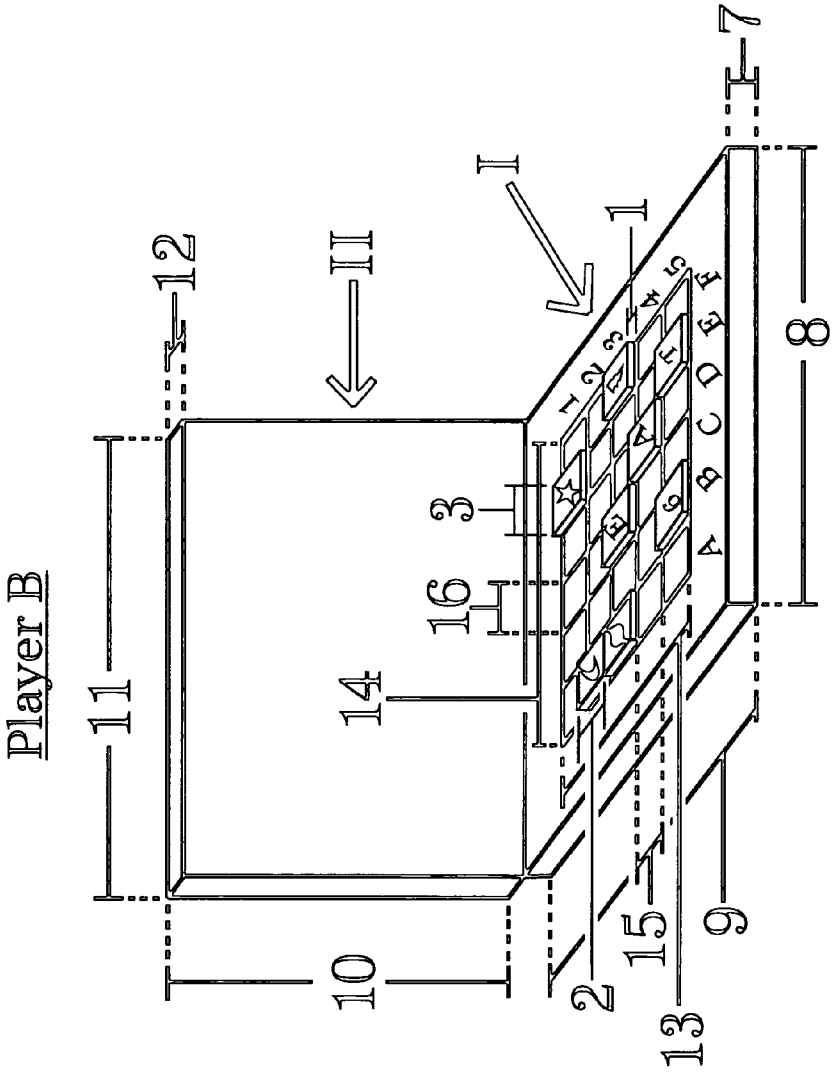

FIG. 12

(C) 2013 Milner Benedict III

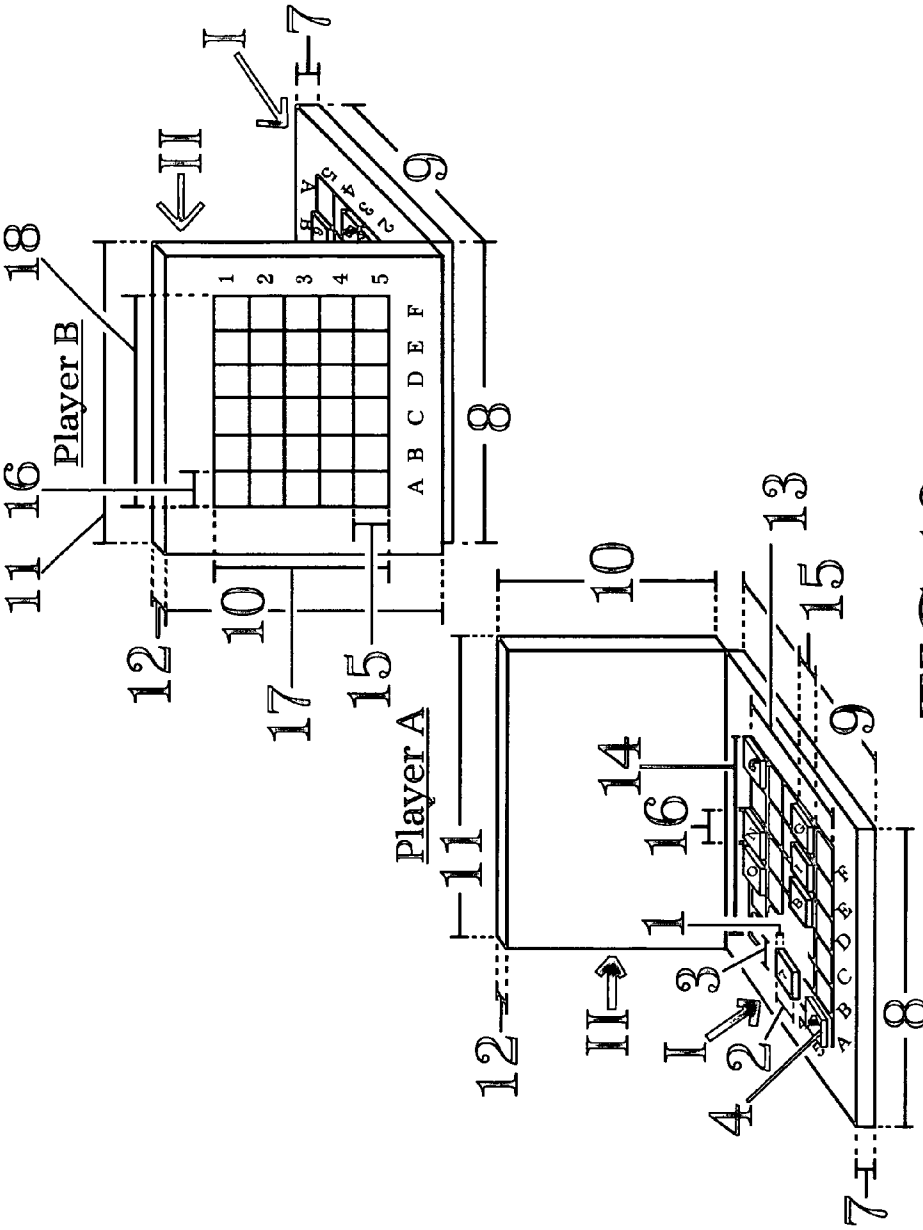

FIG. 13

(C) 2013 Milner Benedict III

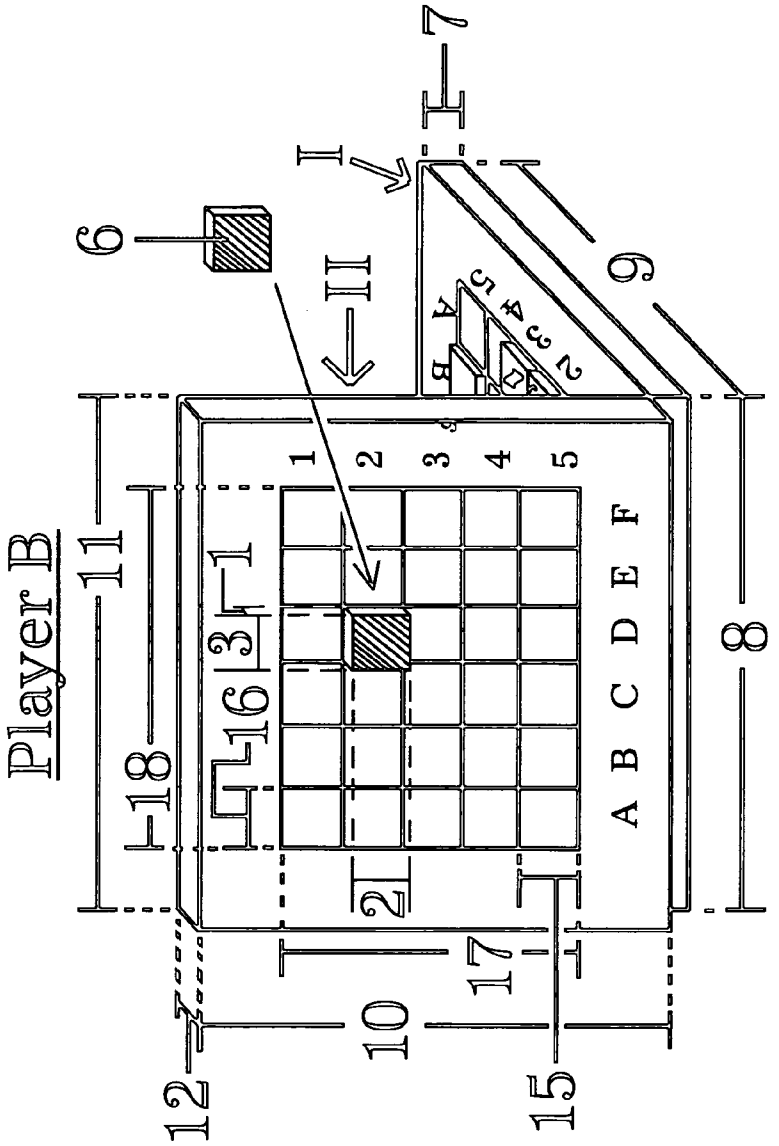

FIG. 14

(C) 2013 Milner Benedict III

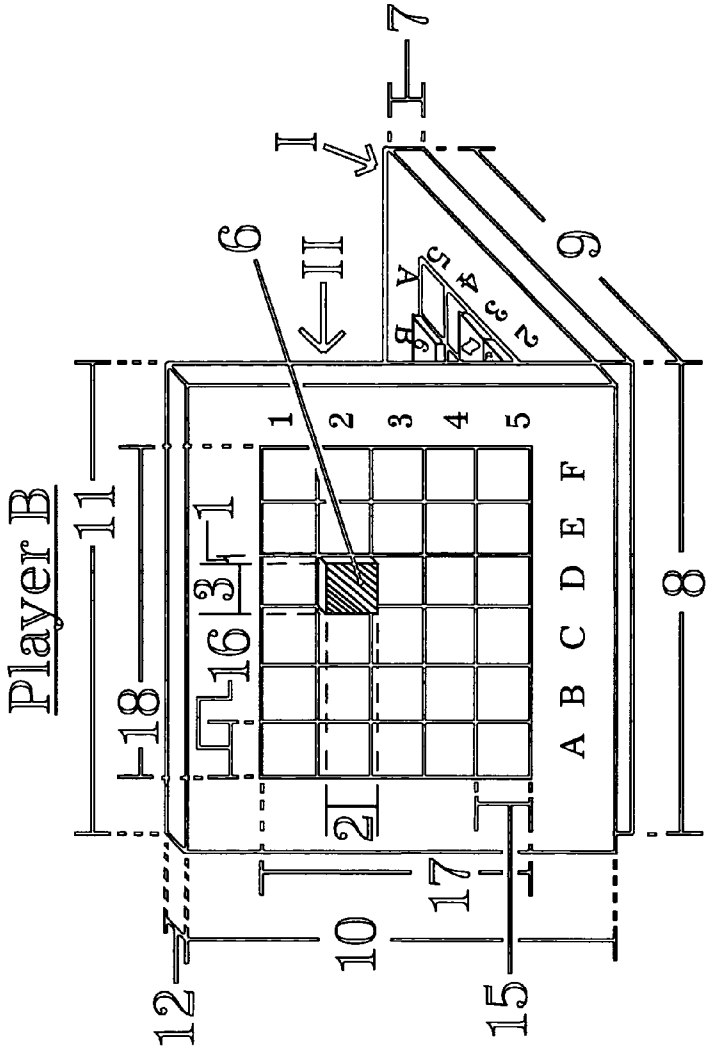

FIG. 15

(C) 2013 Milner Benedict III

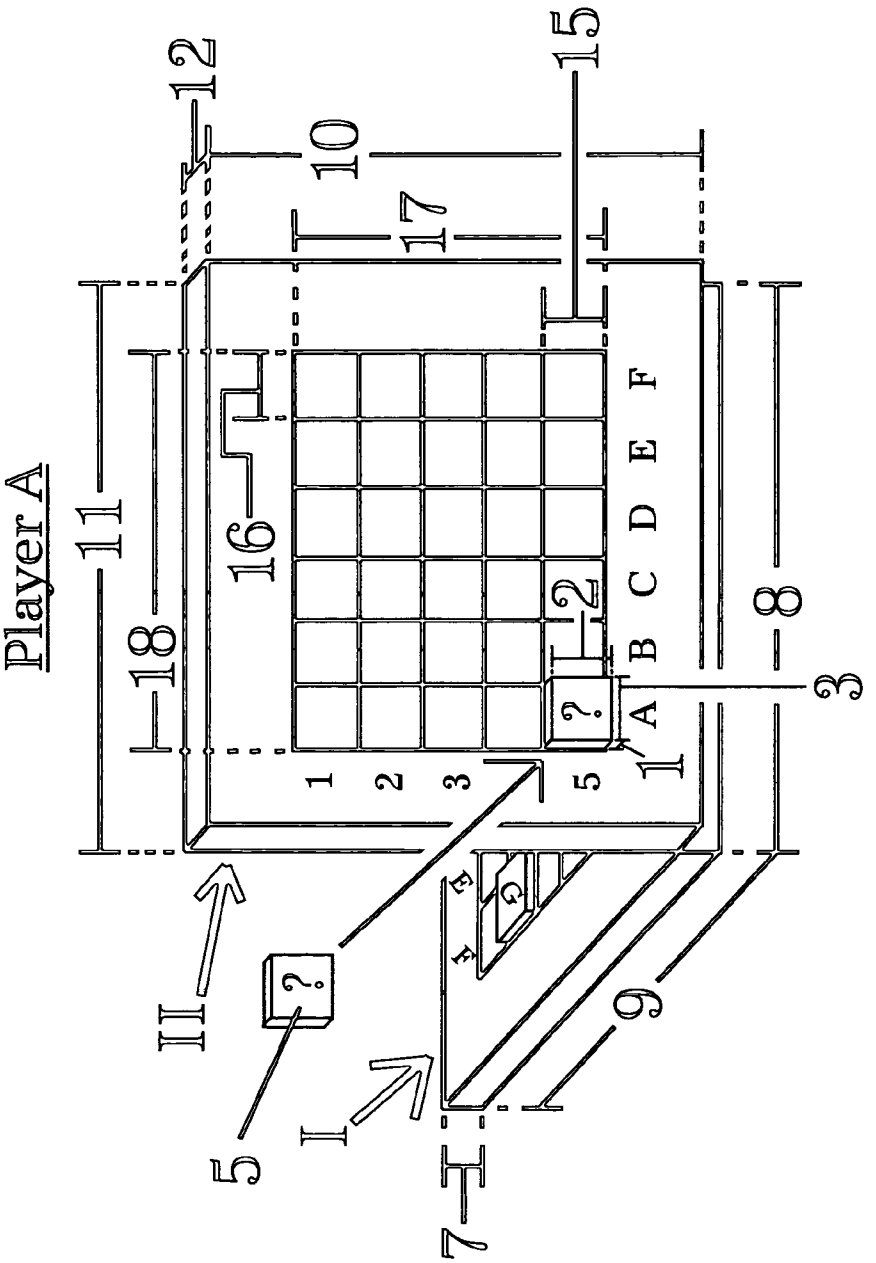

FIG. 16

(C) 2013 Milner Benedict III

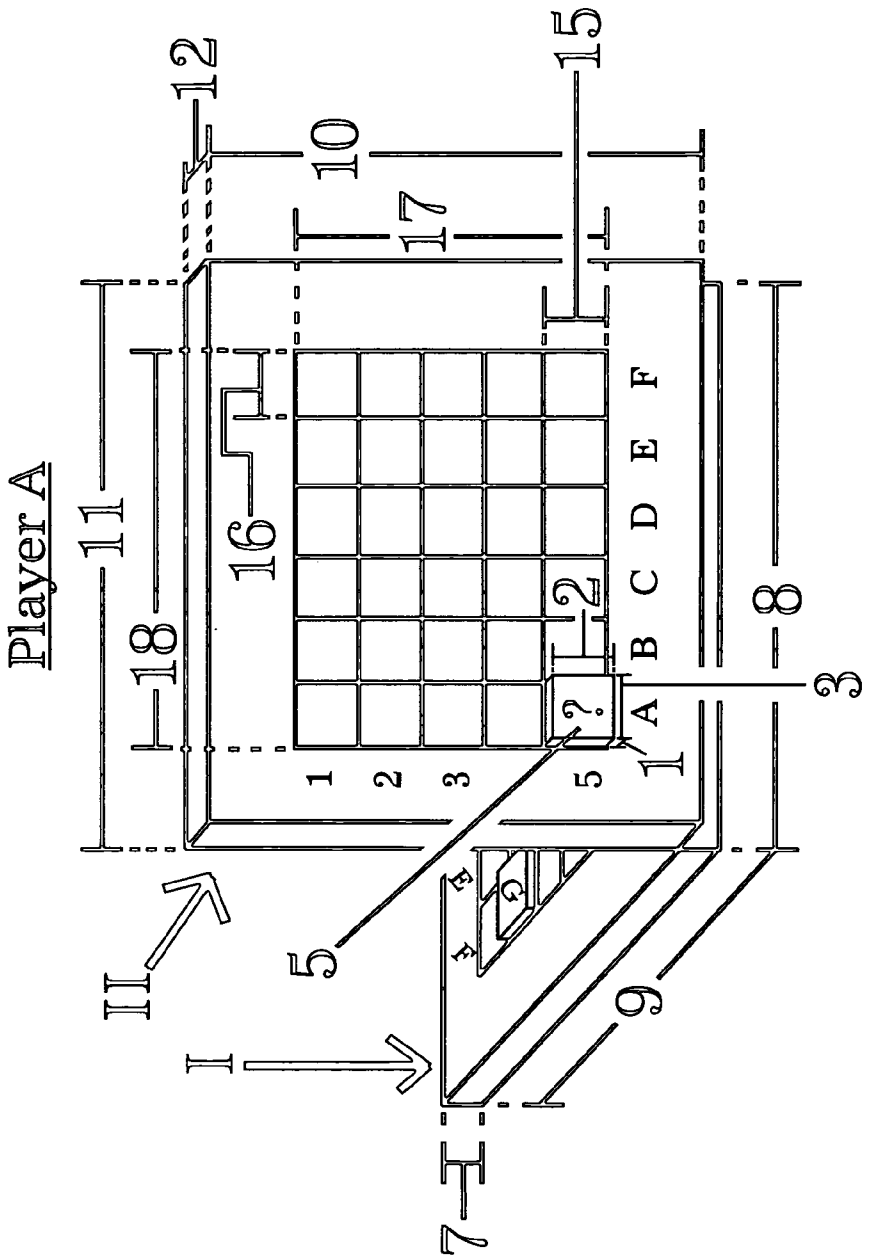

FIG. 17

(C) 2013 Milner Benedict III

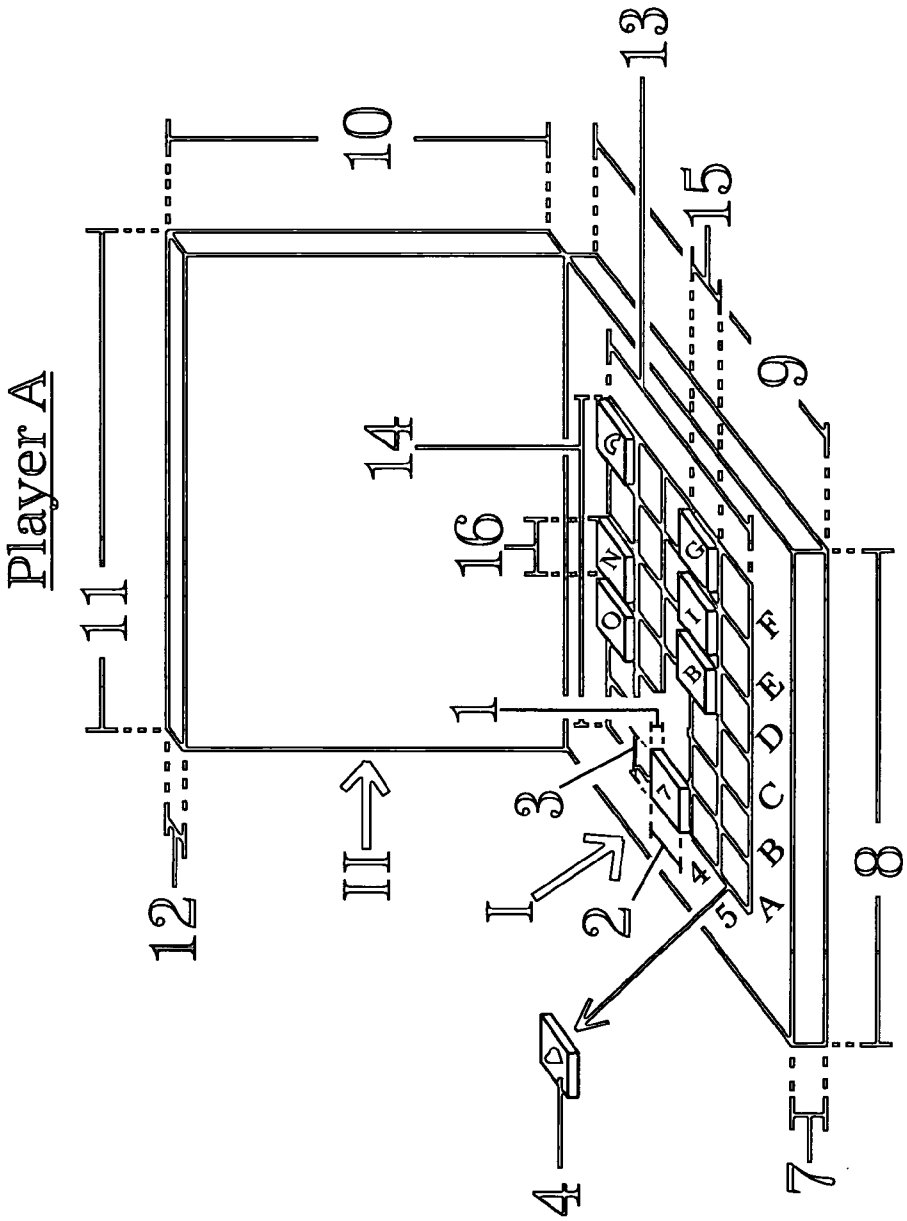

FIG. 18

(C) 2013 Milner Benedict III

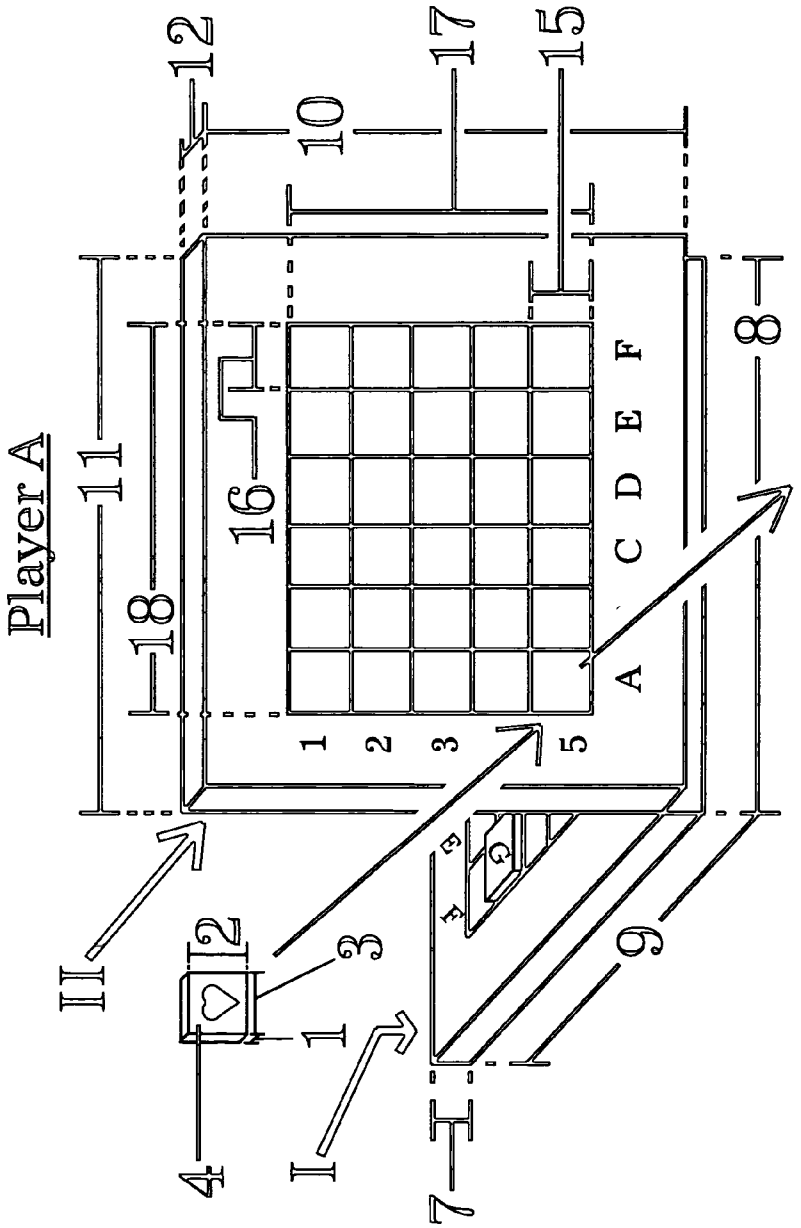

FIG. 19

(C) 2013 Milner Benedict III

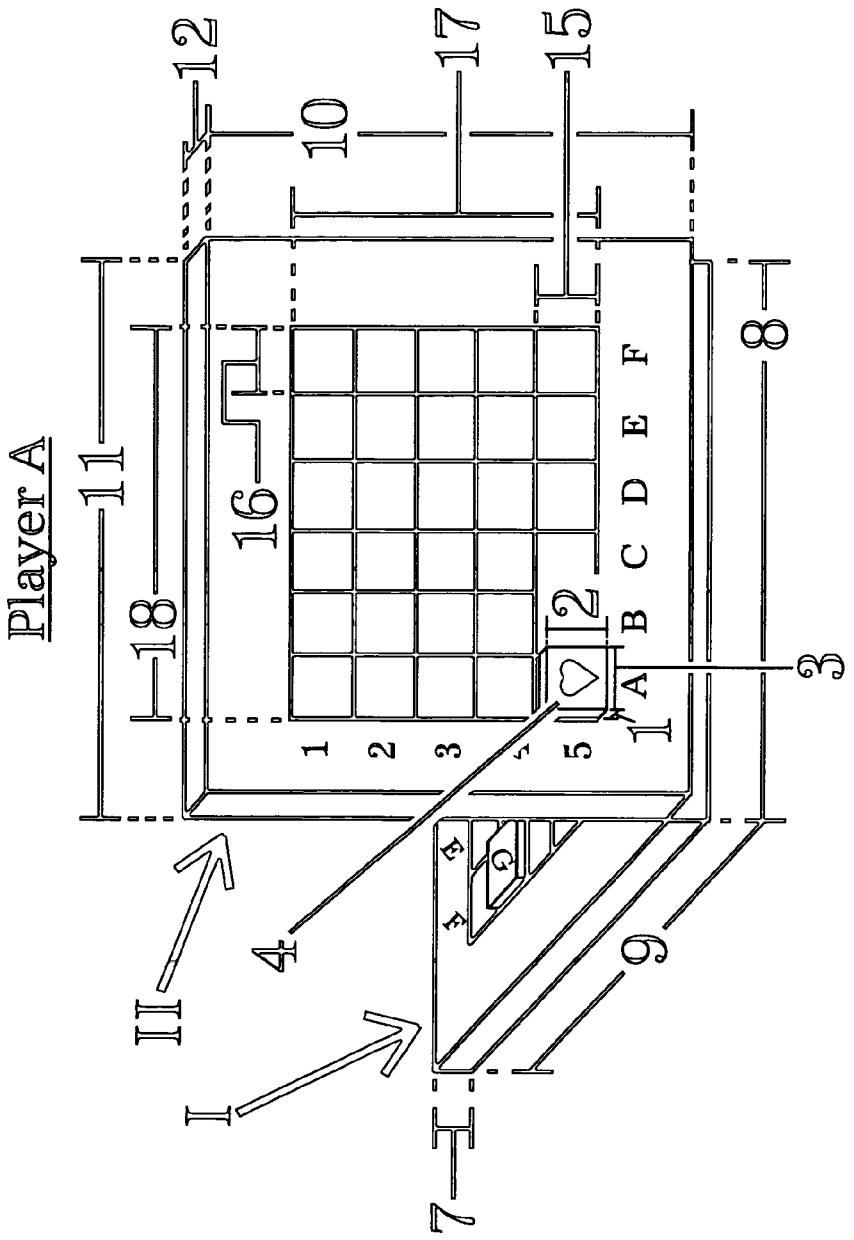

FIG. 20

(C) 2013 Milner Benedict III

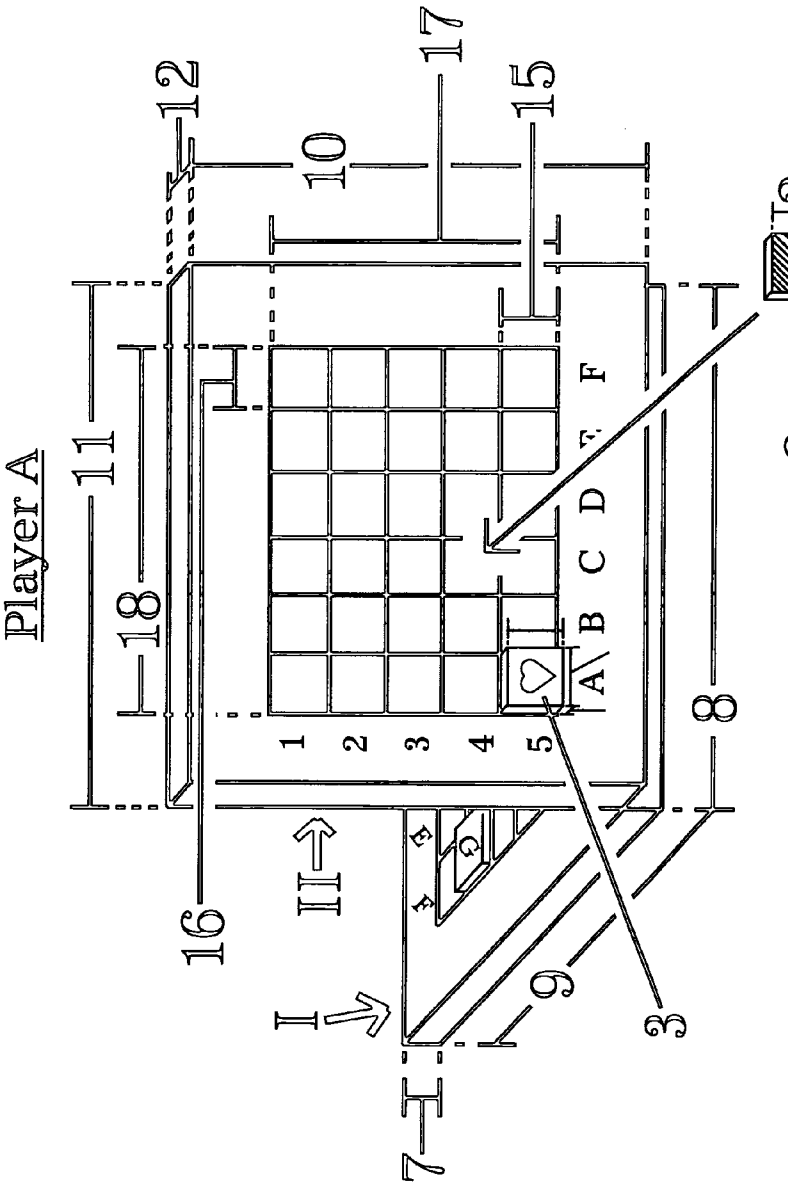

FIG. 21

(C) 2013 Milner Benedict III

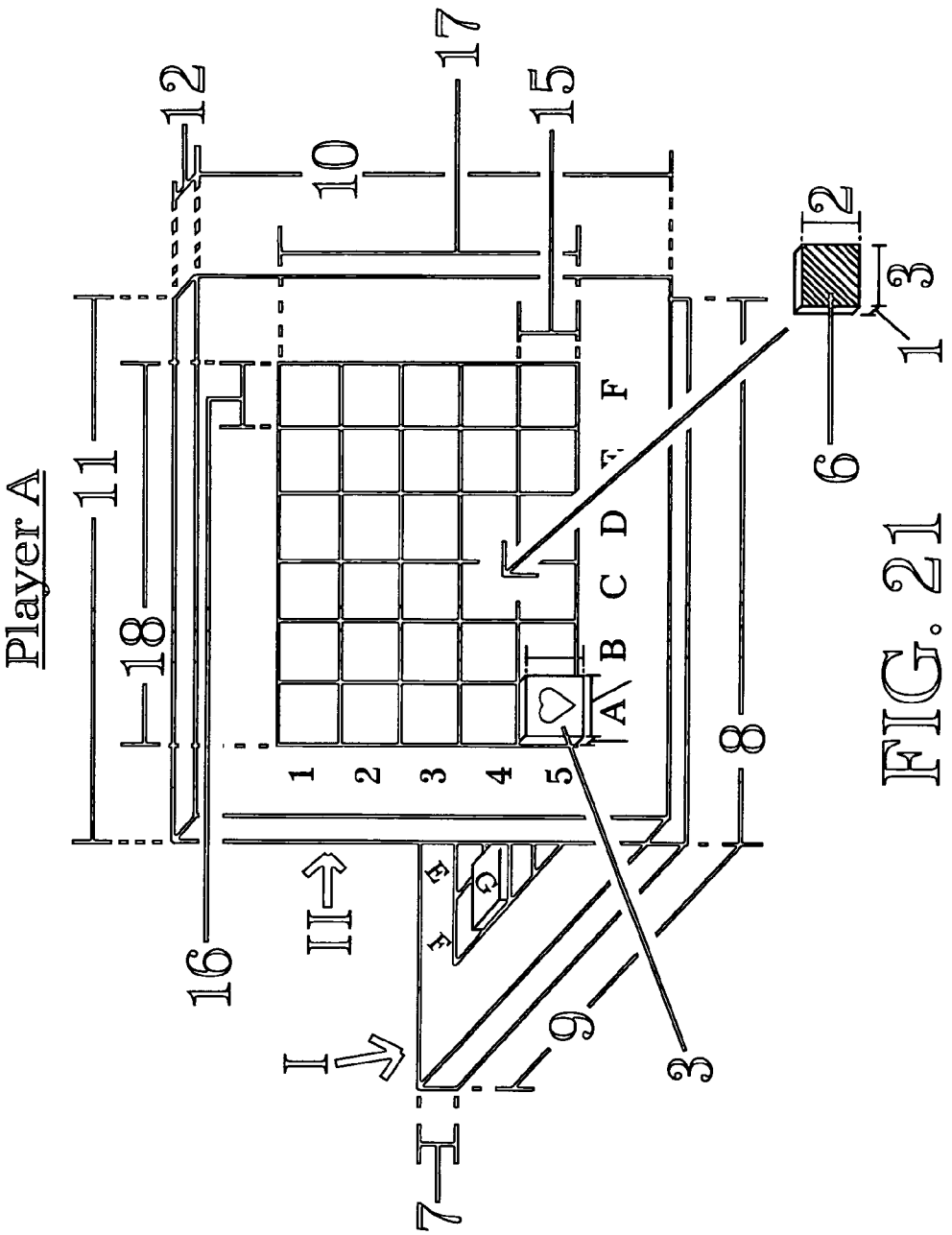

FIG. 21

(C) 2013 Milner Benedict III

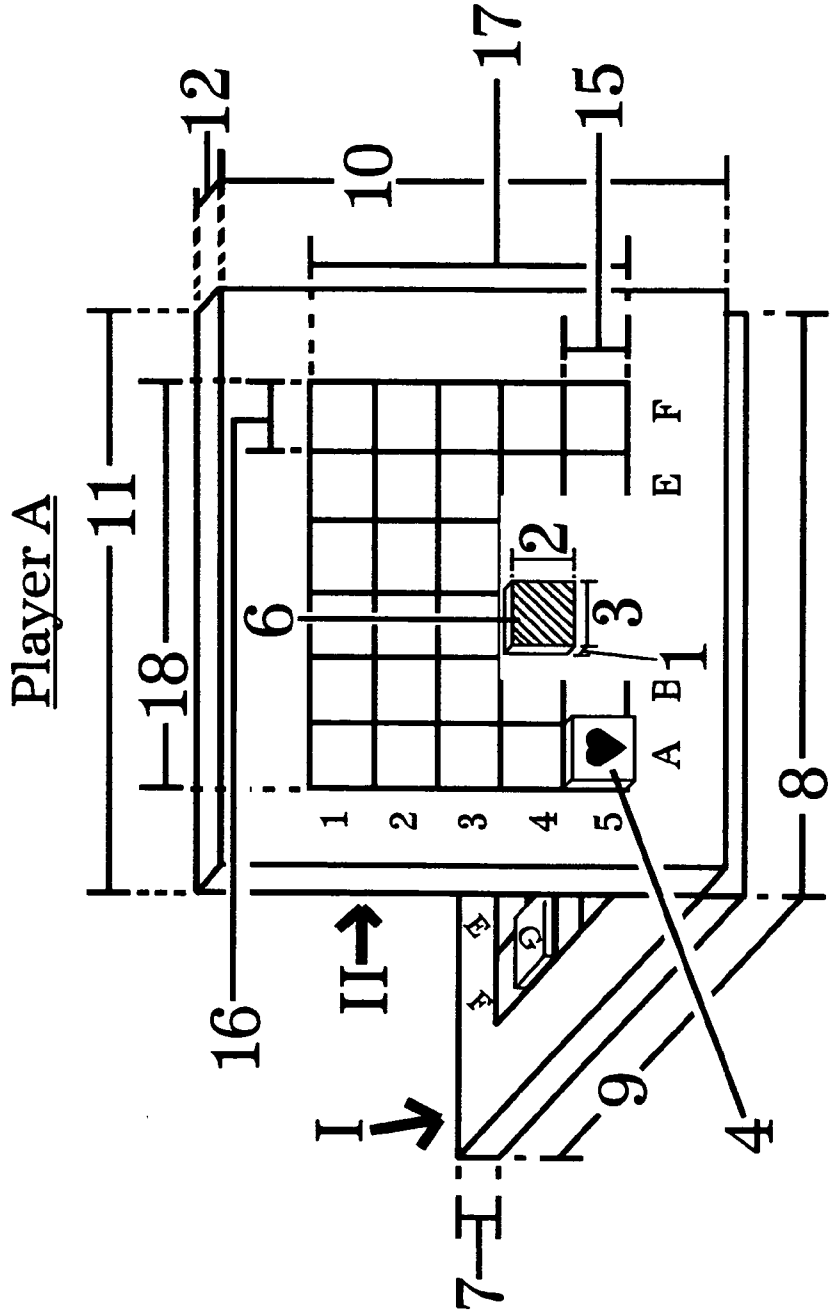

FIG. 22

(C) 2013 Milner Benedict III

SIMPLIFIED CLOSABLE TYPE GAME BOARD DEVICE FOR BASIC SYMBOL AND ALPHANUMERIC RECOGNITION

CROSS-REFERENCED TO RELATED APPLICATIONS

[0001] Not Applicable

STATEMENT REGARDING FEDERALLY SPONSORED RESEARCH OR DEVELOPMENT

[0002] Not Applicable

THE NAMES OF THE PARTIES TO A JOINT RESEARCH AGREEMENT

[0003] Not Applicable

INCORPORATION-BY-REFERENCE OF MATERIAL SUBMITTED ON A COMPACT DISC

[0004] Not Applicable

[0005] A portion of the disclosure of this patent document contains material which is subject to copyright protection. The copyright owner, Milner Benedict III, has no objection to the facsimile reproduction by anyone of the patent document or the patent disclosure, as it appears in the Patent and Trademark Office patent file or records, but otherwise reserves all copyright rights whatsoever.

BACKGROUND OF THE INVENTION

[0006] (1) Field of the Invention

[0007] From the time of birth, learning begins. A primary objective for a child is mastery of various foundational concepts. This includes an understanding of shapes, colors, letters and numbers—the basis of literacy and numeracy. Thus, teachers and parents look for, and use, fun and engaging methods in educating the young. While computers and other technological devices are beneficial, they present limitation with regard to interpersonal interaction—a key ingredient to pedagogical development. Therefore, game boards still provide an optimal approach for learning within a social context.

[0008] The invention disclosed here relates to a game board of the traditional tabletop variety. It allows for discovery of pieces marked with basic alphanumeric and other identifying symbols. These pieces may be grouped on spaces of a game board in logical patterns, as would be the case for words and their component letters. The pieces could also be placed on the game board singularly, as would be the case for shapes, colors, letters and numbers.

[0009] The game presented here requires recognition of playing elements marked with alphanumeric and other identifying symbols. The playing elements are presented on rectangular tiles. These tiles are to be attached to individual spaces. Attachment of a tile to the game board may be realized through the use of materials such as magnets or Velcro. The magnets or Velcro could be applied to one side of the tiles opposite the side that is marked.

[0010] Players aim to locate and eliminate playing elements off an opponent's hidden grid. The course of gameplay may be restricted to locating elements of a specific category, such as shapes, colors, letters, or numbers. However, players may elect to utilize any combination of these marked pieces prior to game start. This disclosed invention therefore aims to introduce a fun and engaging way for learning the concepts foundational to school and lifelong success.

[0011] Because of the generic framework of this invention, it may be adapted to any language or regional dialect therein, which includes Indo-European, African, Asian, and Pacific Island, as well as any others not mentioned here.

[0012] The invention barrows a feature from a previously patented work (see Benedict III, U.S. Pat. No. 7,665,735 B2) that enables individual players to use modified game boards, allowing multiple players to compete in a given competition. What is presented here, however, incorporates a fundamental difference that makes this application new and unique.

[0013] The disclosed invention comprises two rectangular boards which are hinged together on one side. When opened to an approximate ninety degree angle, two grids are revealed—one grid inside the device on a bottom rectangular board and one outer grid that is on top of a rectangular lid. The rectangular lid is a second of the two rectangular boards and the outer grid on the lid is visible to the opponents of a player.

[0014] The outer grid is a key element barrowed and integrated into this invention. However, what is different in this disclosure is that there is no grid found inside the opened device underneath a rectangular board lid. The invention originally disclosed by Benedict III holds three grids, whereas this disclosure holds two grids. This simplifies Benedict III into a format that standardizes gameplay regardless of the number of opponents. In other words, whereas the inside upper grid of the original configuration was specified for use by two players and could be used additionally for three or more opponent play, this disclosure presents a game device that allows multiple players in an arrangement that is the same for all numbers of competitors.

[0015] The elimination of the inside upper grid found in Benedict III acts to reduce confusion about how the game is played. This part of the original board was redundant to the objective of locating and discovering game elements from an opponent's hidden bottom interior grid. Reasonably considered, the extra grid of the original disclosure seems to complicate gameplay. Taking away the upper inside grid benefits the rules as applied to all players, regardless of the number of participants.

[0016] In this simplified version of the three grid closable type game board, prepositioned marked tiles are removed from a targeted opponent's bottom grid. This happens as opponents call coordinates which in fact hold game elements. These game elements are then attached to the matching coordinates on an outer grid. This simplification makes multiplayer gameplay uniform. Thus, a fundamental difference is realized between the prior art and this disclosure that necessitates a formal application for intellectual property protection in the United States of America.

[0017] The game, as defined by the invented device, while retaining aspects of similar commercial products, is characterized by an outer grid used in conjunction with a bottom grid. This enhances the game's ability to achieve and maintain participation in several respects:

[0018] (1) By requiring a child to give consideration on where to place marked tiles on his or her bottom board grid so as to delay or prevent opponents discovering them;

[0019] (2) By providing a game device where players intuitively understand that game elements discovered on a bottom board grid are simply transferred to the same

space on an outer grid of a vertical board, and where such understanding is reinforced by clear and concise instructions;

[0020] (3) By providing a game board device that is designed to spark a child's curiosity in solving the mystery of where various game elements are hidden;

[0021] (4) By exposing a child to the fundamentals of literacy and numeracy in a way that encourages him or her to hunt for an opponent's shapes, colors, letters and numbers, and

[0022] (5) By providing a rectangular closable type game board that allows players to attach rectangular tiles to a bottom grid so that, as spaces are selected, those tiles are transferred to the matching coordinates on an outer grid, thus revealing alphanumeric and other symbols which were prepositioned on an opponent's targeted field. This key aspect of a closable type game board with two playing fields, instead of three, adds a level of simplicity not originally found in Benedict III, U.S. Pat. No. 7,665,735 B2.

[0023] The disclosed invention may currently be classified under class 273, which identifies various amusement game devices. More specifically, the disclosed is a competition of take away where game elements, or rectangular tiles, are prepositioned on a hidden, bottom grid prior to play. Then, each contestant selects a coordinate, one move at a time, which results in a "hit" or "miss" with regard to individually selected spaces. This game, of course, can be enhanced beyond a mere hit or miss ratio by adding tiles imprinted with question marks. In that case, a question marked tile may be placed on the outer grid coordinate when a space is selected that holds a game element whose identity is unknown. The player in turn then has to determine the exact piece in question. A correct guess would result in replacing the question mark with the actual tile from the bottom grid. The game would end when one of the last two remaining players correctly identifies the last remaining game element on his or her opponent's bottom board grid.

[0024] Regardless of whether question marked tiles are used, successfully taking away the last remaining game element from an opponent's bottom board grid results in a win for that player. This invention may therefore fall within the category of Nim games.

[0025] It should be noted that there are two general domains from which this disclosure is derived: First, games that require a level of skill and knowledge for logical reasoning, and second, games that do not assume such requisite ability. Further, there are Salvo type games which relate to aspects of simulated warfare, and Nim type games which are based on removal of game elements. Nim and Salvo may be thought of as representing stages where competitions serve to introduce the building blocks for a foundation in reasoning skills. It is a given that these games ultimately led to the original educational tool cited in Benedict III that enabled multiplayer competition within a Salvo type design.

[0026] Demonstration of vocabulary and other knowledge are not generally assumed with Nim games. Therefore, it would be appropriate to develop a disclosure that acts as a bridge from rudimentary to more challenging tasks. Such a design would need to instill and cultivate recognition of symbols such as shapes, colors, letters and numbers—the foundation of literacy and numeracy needed for life success. Further, creating a board design that does not confuse or overly complicate the aim of such games is an important requirement.

[0027] There have been, of course, many related configurations in the prior art which touched on areas of literacy and numeracy. But adding such games into a board design that utilizes two separate playing fields in a way that enables, conceivably, unlimited multiple players stimulates a level of reasoning for children not typically possible. As has already been stated, having three grids within the previously presented board adds redundancy. This redundancy can be resolved by limiting the board to two grids while maintaining the innovation of that original multiplayer design. This disclosure now discusses the prior art in illustrating this point.

[0028] (2) Description of Related Prior Art

[0029] In discussing this invention, it is important to recognize several pertinent types of game board configurations. These patented game configurations of the prior art can be divided into related categories. Such games are contrasted from the present invention and are a progression in the stages of development which led to the current disclosure. Hence, the full merit of this new game board is validated.

[0030] Games of the prior art have required skill in placement of pieces in such a way as to delay opponents successfully targeting and eliminating them. Players also use sequencing abilities to guess what elements, such as letters, come in any particular order based on logical word spelling. This is why such games, and specifically those of word discovery, could fall into a category of salvo, as players try to eliminate an opponent's "fleet" of words in those competitions.

[0031] In providing a perspective on the value of the currently disclosed invention, several groups of amusement games are detailed. The first is in regard to the art proceeding Benedict III in U.S. Pat. No. 7,665,735 B2. This section discusses two player games in salvo and word discovery. The next section briefly examines how Benedict III reconfigures games of the prior art so as to allow three or more players to compete in a given contest within a modified board format. Thus, Benedict III is the dividing line between prior designs and a single device which allows for, conceivably, unlimited numbers of opponents.

[0032] Following Benedict III is a discussion in regard to Nim games. The point here is to show what devices have utilized qualities which make them appealing and how aspects of these are found in the currently disclosed invention.

[0033] Last, the application points to a problem of the prior art: notably, that a closable type game board designed with three separate grids yields a redundancy beyond what is needed to accomplish an objective of symbol discovery. As already stated, this redundancy can be overcome by removing the upper grid inside a device located on the vertical board. This has the effect of simplifying how game pieces move with respect to the two remaining grids and eliminating the need to provide players with more complicated instructions. Thus, readers of this disclosure should be able to follow the path which naturally illustrates the reason for this application, the "Simplified Closable Type Game Board Device for Basic Symbol and Alphanumeric Recognition".

Part I

Games for 2 Players

(A) Salvo

[0034] (i) Closable Type with 2 Grids

[0035] The first category for discussion regards salvo games which allow for a maximum of two players in any

given competition. In this embodiment, each contestant utilizes a game board that remains closed when not in use. When opened for competition, two grids are revealed. These grids, or playing fields, are somewhat perpendicular to each other. The boards remain connected via a hinge on one side of the device.

[0036] Competition involves players calling out coordinates in turn. The objective is to guess which spaces on an opponent's targeted grid are occupied with pieces. There are several examples which cover this style of game device.

[0037] E. E. Blau in U.S. Pat. No. 2,053,598 demonstrates a game that comprises two flat boards each holding identical playing fields with sockets for receiving and removing pegs and other naval pieces such as warships. These boards are hinged together, allowing for the apparatus to be closed and then opened for play. The playing field located on the upright vertical board is the shooting area. It is revealed when swung to a raised position with regard to the horizontal target board. The target board is an action area playing field onto which he or she places his or her own game pieces. The game pieces on the target board are the objective for elimination by the opponent. The target board rests on a flat surface such as a table, giving the entire apparatus a stable hold for play.

[0038] E. J. Adams in U.S. Pat. No. 4,194,742 demonstrates a game board related to Blau with one notable difference: game pieces representing land masses are provided which fit onto the grid, which is referred to in Adams as a playboard, coordinates. This invention embodies an integration of geography onto the game device more approximating salvo warfare. Also, Adams provides storage bins on either side of the playboard which may be divided into smaller compartments. This game device allows for two opponents per competition.

[0039] A. B. Thomander in U.S. Pat. No. 3,514,110 demonstrates essentially two variations of the two grids salvo type closable game board. The first variety is unremarkable from the one presented in Adams. However, the second variety demonstrates a flat board divided into a pair of identical sections adapted to be arranged adjacent to each other. One section of the flat board is an area marked "Home Fleet". The second is the record area marked "Enemy Fleet". In addition, there is a "Score Area" into which a player marks hits that have been made against the opponent. These hits are also recorded in the "Enemy Fleet" board.

[0040] Each player uses a flat game board identical in the characteristics just mentioned. These two boards are separated by an upright barrier that obscures the selected placement of ferruled game pieces on each of the boards from the view of the opponent. A player calls out coordinates, with "hit" and "miss" attempts recorded appropriately until all targets have been eliminated by one of the two players.

[0041] (ii) 2 Game Boards Attached Together

[0042] Another category regards salvo games that also allow for a maximum of two players in any given competition. First, there is the standard device with two playing fields visible to a contestant. However, in this style, the two devices are attached to one another. In other words, instead of having two separate games, the backs of each vertical board of the two devices are joined together. The horizontal bottom playing boards can then be folded up, enabling a single assembly, presumably to allow for ease of transport. Five patents of the prior art relate to this characteristic, two of which are ornamental in design.

[0043] D. J. Lamb in U.S. Pat. No. 4,801,148 demonstrates a game of tactical strategy where a mounting structure is used for maintaining vertically disposed maneuvering boards in a back-to-back relationship. FIG. **5** of this patent illustrates such an assembly. Further, there is a plurality of game pieces and maps and transparent grid sheets which may be used on the playing fields themselves, adding a degree of complexity to Lamb.

[0044] C. J. Woolhouse in U.S. Pat. No. 5,154,428 demonstrates two playing fields, each composed of a pair of sectioned grids, which are mounted together in a way that provides for ease of assembly and disassembly into a carrying case for transport.

[0045] William N. A. Creech in U.S. Pat. No. D536,039S demonstrates a zipper closable carrying case within which a disposed maneuvering board divides two playing grids. The playing grids are situated into each side of the case. When opened, the disposed maneuvering board is raised to a vertical position. This obscures the view of either playing grid from the other. This arrangement allows play of the traditional table top game known as "Battleship".

[0046] Daniel J. DeOreo in U.S. Pat. No. D601,204 S presents the traditional "Battleship" game board. However, two of these boards are attached in a back-to-back relationship. This enables the two bottom, horizontally disposed boards to be folded up and onto the center vertical board. The single unit thus allows for ease of storage, transport, and assembly upon use.

[0047] Of course, these games find their origin in "Battleship"—a pencil and paper game invented by Clifford Von Wickler and then formally published as a pad and pencil game by Milton Bradley in 1943. These games have been restricted to competition between two players (see http://en.wikipedia.org/wiki/Battleship_(game)).

[0048] An important point can be understood from this discussion on Salvo games of the closable two grid type. The general embodiment of the previous art in this category has presented a format which directly touches on a basic game board comprising two boards hinged together on one side. This disclosure, however, shows how the inside upper grid found within the traditional "Battleship" style game can be relocated to the opposite side of the vertical board. This becomes an outer grid visible to all opposing players. This outer grid enables opponents to see the current status of all coordinates on a particular player's targeted board, facilitating a competition of multiplayer salvo. But are there other types of boards which facilitate Salvo competition? The following section addresses this question.

(B) Multiple Level Game Board

[0049] A category of game boards approaches the salvo type and offers more than two playing fields where two opponents compete. These multilevel game boards are known in the prior art as devices allowing for simulated battle in play. Several examples demonstrate this category.

[0050] Harper et al demonstrates in U.S. Pat. No. 3,767,201 a multilevel game board arrangement for three dimensional chess or checkers game play.

[0051] Brennan demonstrates in U.S. Pat. No. 3,937,471 a multiple board chess game with added play pieces.

[0052] Mayfield et al in U.S. Pat. No. 5,443,268 demonstrates a game with three checker grid boards that are stacked, one above the other, and connected to a vertical pedestal. Two opposing players are assigned to move game pieces per board,

therefore allowing for a total of six players to compete. These players are grouped into two opposing teams who utilize armament pieces different from prior games.

[0053] As can be seen from this discussion, inventors have created games that indeed use three grids, but in a completely different configuration from the original disclosure found in Benedict III. Therefore, unlimited numbers of contestants are precluded from play. There are, however, flat boards which allow several players, but are still limited in the total number of potential contestants.

(C) Single Level Game Board for Multiplayers

[0054] Another type of multiplayer board regards a game with a single, flat central playing field whereupon opponents engage one another for the purpose of elimination of the opponents' pieces.

[0055] S. Shkolnik demonstrates in U.S. Pat. No. 3,840,237 three participants who engage one another for the purpose of checkmating the two other opponents. This is done on a central, six sided board that has three sides for directly playing the game.

[0056] Of course, a game board of the prior art relates to Chinese Checkers. This is a flat board that can be played by a maximum of six people. However, five people cannot play. The objective, unlike salvo, is to be the first to place one's pieces in the corner opposite their starting position. This board is apertured into a hexagram. Single moves or jumps over other pieces are allowed in competition (see http://en.wikipedia.org/wiki/Chinese_checkers).

[0057] A variation of Chinese Checkers is demonstrated by Wendy Ko in U.S. Pat. No. D450,779 S. This game board is an ornamental design that allows it to be folded up with a fastener.

[0058] The first several parts of this survey have related to Salvo type games. As the currently disclosed invention relates elements of literacy, it is important to see what discovery type word competitions exist. This shows the development that led to the original disclosure by Benedict III regarding a closable type game board box featuring three grids—an innovation which has been transformed into the new invention disclosed here.

(D) Discovery Type Word Games

[0059] A category relevant to the prior art involves games where the general strategic objective is a "hit" or "miss" of targets between two players, but which focus on words and their component letters as opposed to military or naval units. The manner of play may vary among various word forming games, but their underlying theme is to create, strategize toward, discover and solve for words.

[0060] An example is demonstrated by M. Kindred in U.S. Pat. No. 4,059,273. Here, a game board is set forth that has twenty six rows of playing areas arranged in five columns. Playing pieces are placed into the resulting spaces. An opponent attempts to break a hidden code formed by the pieces. The rows are numbered A through Z and the attempts are scores according to the nearness to an accurate guess by the player. The code has five such letters forming a word, one letter per column.

[0061] Another example is demonstrated by E. J. Jones-Fenleigh in U.S. Pat. No. 4,188,036 which sets forth a game comprising a board, a holder, a set of playing pieces, a set of marking elements, a set of scoring elements and a word list. The board has a number of rows of playing areas which serve as test areas for a player's attempts in duplicating a hidden code word chosen by the player's opponent. The game is played with the intention of achieving a set number of points, agreed upon prior to game start, for an equal number of rounds played.

[0062] In U.S. Pat. No. 3,427,028, Abrahamsen teaches an invention with two embodiments. The first comprises a vertically disposed playing board resembling that of a grid. The second embodiment holds multiple panels appearing as rectangular grids, each attached to the others on one side, which are disposed at preferably equal angles from each other. This allows each player to be pitted against two opponents. Also provided are playing pieces which are marked with letters, with the same letter duplicated on either end. The objective is to build words in lateral directions while frustrating words which have already been completed in the opposite directions by opposing players. Points are scored with each word built into the grid per turn, with the winner presumably being the one with the most points at the end of the game.

[0063] As has been established here, while military and naval style games have been provided where participants strategically place valued pieces in coordinate grids and attempt to locate and eliminate one another's pieces within a defined area, and while there are various word forming type games whose underlying theme is creating, strategizing toward, solving for and discovering words and their component letters, it is important to note that games have been provided regarding the injection of letters, instead of military or naval units, into a grid coordinate system. The use of letters in a grid coordinate system may come to represent a "fleet" of words for elimination by an opponent. Several games have been published online which provide setup instructions and rules for such competitions.

(E) Combination Salvo Word Discovery Type

[0064] http://www.superteacherideas.com/spelling2-battleship.html demonstrates the game activity "Sink and Spell" where students make a sheet with two grids. Letters are written on the top and numbers to the side for coordinate identification. The players then write words into the grids. Coordinates are called out, with a "miss" indicating no letter in a particular space, and a "hit" resulting in the opponent revealing the letter. This game is played by a pair of opponents.

[0065] Another example posted on this website, "Battleship Spelling", is a more detailed version of "Sink and Spell" with guidelines regarding number of words to use and dimensions of paper sheets on which to create the grids. The listing actually states that this is "just like the Battleship board game".

[0066] Http://www.lessonplanspage.com/LASpellBattleship3JH.htm, posts "Spelling Battleship" with the rule that once there is a "hit" on any particular coordinate, the opponent is immediately told the word and he or she then has to spell it correctly. If that player correctly spells the word, he or she gets a point and the word is revealed in its entirety; otherwise the turn is lost. That player, however, may reattempt the spelling on the next go around by calling the space coordinate again. The first player to locate and spell all the words on his or her opponent's grid wins.

[0067] It is clear that an advantage of military or naval style games of the prior art has been developing within players the skills important for tracking dispersal of attacks over a coor-

dinate system and anticipating where the next "hits" could be. This advantage was constrained, however, in that they engage players on mere "hit or miss" cues, limiting assessments to success: failure ratios between opponents' progress against one another's targets. Advantages of word games of the prior art encourage players to develop spelling abilities for accurate vocabulary usage, as well as to figure out how words are encoded into language, their meanings, and differences in relation to one another for the ultimate objective of communication.

[0068] The prior art discussed in this analysis shows how these two key features: (1) initiating, tracking, and assessing the success or failure in targeting unknown prepositioned objectives within a military or naval style grid coordinate type system, and (2) creating and solving for words in a puzzle type environment, have been combined by inventors to create innovative games. Substituting words and their respective letters for military or naval units into the typical coordinate grid system of a sectioned, visually hidden region is a clear advantage of such inventions. The result is an expansion of the identifiable qualities of each occupied coordinate so that, once a space is determined to be occupied, arbitrary guesses leading to more calculated judgments can be taken. This brings a mere salvo objective to a point where vocabulary can increase the necessity for higher logic and sequencing skills.

[0069] With this said, a key disadvantage of previously provided word salvo games was their allowance for a maximum of two players in any competition. They were thus limited in the scope of complexity which could have been achieved through three or more opponent play. This problem was overcome by Benedict III in U.S. Pat. No. 7,665,735 B2.

Part II

Multiplayer Word Salvo Type Game Board

[0070] Benedict III demonstrates an embodiment of the abovementioned salvo play board with an addition that makes multiple player word discovery games possible. The basis of that patent is placement of a grid on top of a game board lid. When opened, so that the lid is in a ninety degree angle from the base, three playing fields are revealed. These are utilized during competition, allowing three or more opponents to participate at once. This is a novel approach to the related prior art, because game boards always had some set limit to the total number of allowed players. No previous design has enabled play for, conceivably, unlimited numbers of contestants.

Part III

NIM

[0071] The game categorized as Nim is a competition of strategy where two players take turns by picking up pieces from a group or set of contest elements. In normal, conventional play, the objective is to be the first to remove all targeted pieces. Alternatively, in Nim the player to take the last object loses.

[0072] It is believed, though not entirely certain, that the game of Nim originated in China. The term itself was coined by Charles L. Bouton of Harvard University, with its derivation relating to Nimm, which means "take" in German. The word is also related to the obsolete English verb Nim, which means "take" (see http://en.wikipedia.org/wiki/Nim_Game).

[0073] The first game of this category is in regard to Benatti, U.S. Pat. No. 6,155,566. This publication describes two identical play boards, each with a pair of playing positions arranged in rows that form two triangular patterns, with the two patterns coming together at a central row comprising at least one play position. The play positions are shallow depressions into which pieces are placed.

[0074] Essentially, two opponents take turns in compelling the other to move his or her pieces onto the second play board. The winner is the one who forces his or her opponent to move the last piece from one play board to the second.

[0075] Another example of Nim is presented by Kunik et al in U.S. Pat. No. 3,708,171. In that publication, the inventors propose a flat game board having a plurality of circular apertures. Disc game pieces are then placed into the apertures. These disc pieces are rotatable into either "in play" or "out of play" positions. Two players alternate in moving the pieces, one at a time per turn. The player who plays last and leaves one remaining game disc piece "in play" wins the game.

[0076] What is important to understand here is that each of these Nim games focuses on the objective of moving, or remaining in place, the last game element in a board competition. This aspect is similar to the current disclosure in that, as the reader will see, the game requires moving of the last rectangular symbol marked tile into an out of play position, on an outer vertical playing field. It is this feature which lends the invention to a category of Nim games.

[0077] As can be seen from this analysis, the use of individual letters is an aspect which touches on the currently disclosed invention. Many games of the prior art have, in fact, touched on elements of Nim, Salvo, numbers and word discovery. The problem, however, is specifically addressed to the issue of designing a game board device for multiple players.

[0078] Throughout the prior art, multiplayer game boards have been created with a degree of complexity. But is there a more logical and visually ergonomic way to integrate all the key aspects mentioned such that players can naturally identify how the board is to be used, and without overly detailed instructions? Can Benedict III be simplified in a way that captures even more interest through its simplicity? This problem is resolved in the following section.

BRIEF SUMMARY OF THE INVENTION

[0079] Whereas the prior art focuses on elimination of prearranged words or other marked game pieces within various board structures, the disclosed invention of this application functions to provide players with a game board device that makes multiplayer competitions possible while simplifying previously presented formats.

[0080] Players select spaces, which in turn reveal game elements prearranged on the opponent's bottom playing field. This reduces game playing to a hit or miss competition among opponents. As a result, children begin recognizing the basic alphanumeric symbols of literacy and numeracy.

[0081] It is therefore accordingly an object of the present invention to provide a game of take away which avoids the aforementioned problem of the prior art—that being a multiplayer board that does not easily assimilate into the criteria needed for a more straightforward board design that matches age appropriate competition among school children. In other words, this disclosure brings the multiplayer word salvo type game down to a point where it is intuitively more playable for boys and girls.

[0082] The primary way in which this invention holds interest for children, which allows it to overcome the just mentioned problem, happens by removing the upper inside grid from the device originally presented by Benedict III, while maintaining the key innovation of an outer grid on top of a rectangular game board lid.

[0083] Having a game device where game elements can simply be transferred from one grid to a second grid achieves more understandable and logical rules for play. Hence, the full merit of the invention presented here is established.

[0084] It is also an object of the present invention to provide a Nim game that overcomes a problem of the prior art: the restriction of a typical game device to a certain number of players. By redesigning Benedict III with two grids, instead of three, competitions can still allow for an unlimited number of opponents to compete in any given competition. This essentially brings the typical Nim game to a point where it meets the category of multiplayer word salvo discovery, yet is more easily playable for children of any age.

[0085] A further object of the present invention is to act as an introduction to higher stages of games which educators utilize in teaching school curricula. Such games require more advanced levels of reasoning and knowledge. These involve salvo, word discovery, and an integration of both (see Benedict III, patent number U.S. Pat. No. 7,665,735 B2), as well as various games of numbers and logic. By simplifying Benedict III in a way that maintains the advantage of allowing multiple contestants, the currently disclosed invention fosters and accelerates the assimilation of the basic alphanumeric symbols knowledge needed for mastery in life achievement.

[0086] Furthermore, an object of the present invention is to provide a closable type game board which opens to an angle that is approximately ninety degrees, allowing the base to rest upon a flat surface. When brought together with other closeable type devices, the invention may enable two or more individual players to arrange tiles marked with alphanumeric symbols on the bottom playing fields of their game boards. The last remaining player with marked game elements on his or her bottom grid wins the game.

[0087] The advantages of the game which are the object of the present invention are the following:

[0088] The child is introduced to critical thinking skills by requiring him or her to think about where targeted game elements may be by simply selecting spaces and seeing what pieces are revealed;

[0089] The fundamentals of spelling, vocabulary and other related knowledge are strengthened in getting the child accustomed to simply seeing shapes, colors, letters and numbers revealed in the course of play, and

[0090] a child is introduced to multitasking skills by requiring him or her to take a "bird's eye" approach in visually assessing the status of opponents' pieces on his or her playing field, thus giving the player not only a head start in winning the game, but a head start in winning at life.

BRIEF DESCRIPTION OF SEVERAL VIEWS OF THE DRAWINGS

[0091] The present invention is further described hereinafter with reference to the parts, their assembly and relationships, shown in the accompanying drawings, in which:

[0092] FIG. **1** represents one of the five sets of rectangular tiles used as game pieces, with the first of five sets marked with letters of the alphabet;

[0093] FIG. **2** represents sets two, three and four of the five sets of rectangular tiles used as game pieces, with set two imprinted with basic shapes, and set three imprinted with question marks, and set four imprinted with a red surface;

[0094] FIG. **3** represents set five of the rectangular tiles which may be used in gameplay and which are imprinted with the numbers zero through nine;

[0095] FIG. **4** represents the disclosed invention in an opened position from the perspective that would be observed by a single, particular player, with Roman Numeral One identifying the bottom rectangular board which is hinged on one side to a second rectangular board identified with a Roman Numeral Two;

[0096] FIG. **5** represents the disclosed invention in an opened position from the perspective that would be observed by all other opponents during competition;

[0097] FIG. **6** demonstrates the closing and opening of the hinged game board for basic alphanumeric symbol recognition;

[0098] FIG. **7** illustrates an approximate positioning of two simplified closable type game board devices as would be the case for a two player competition;

[0099] FIG. **8** illustrates an approximate positioning of three simplified closable type game board devices as would be the case for a three player competition;

[0100] FIG. **9** illustrates an approximate positioning of four simplified closable type game board devices as would be the case for a four player competition;

[0101] FIG. **10** demonstrates the placement of a rectangular game tile imprinted with a heart **4** onto the A5 coordinate of a bottom grid;

[0102] FIG. **11** demonstrates the full placement of a rectangular game tile **4** onto the A5 coordinate of the bottom grid, along with the words "BIG" and "ON" placed onto the grid, and the number "7" and a tile marked with a semicircle also placed onto the board designated as "Player A";

[0103] FIG. **12** demonstrates the placement of rectangular game tiles onto the bottom playing grid designated as "Player B";

[0104] FIG. **13** illustrates an approximate positioning of a simplified closable type game board device designated as "Player A" and a second simplified closable type game board device designated as "Player B" as would be the case for a two player competition, and

[0105] FIG. **14** through FIG. **22** demonstrates a round of moves between Player A and Player B.

DETAILED DESCRIPTION OF THE INVENTION

[0106] As can be seen from the above figures, the game device (FIG. **4** and FIG. **5**) comprises two rectangular shaped boards of congruent dimensions. One of these functions as a bottom board I and the second functions as an upper vertical board II, which may be thought of as a lid. These are hinged together on one side, allowing the two boards to be closed in a perfect fit (FIG. **6**).

[0107] When it is opened to an approximate ninety degree angle, the device may rest flat upon a surface for play. Play is accomplished through the use of two grids which are revealed when the upper rectangular board II is raised to a vertical position. This would place it in a ninety degree angle with respect to the bottom horizontal board I. There is one bottom grid located inside the device on a bottom board (FIG. **4**). There is also one outer grid located on top of a vertical rectangular board lid (FIG. **5**).

[0108] The bottom grid is a playing field which is intended to be visible only to an individual participant during competition. The outer grid is a playing field visible to all other opponents during competition.

[0109] The grid inside the device on a bottom board (FIG. **4**) may be thought of as a bottom action area playing field, and will be referred to as such through the duration of this application. The outer grid, or playing field, located on top of a lid (FIG. **5**), along with the bottom action area playing field, are both of rectangular dimensions congruent to one another in height, length, and width, as well as in the total number of unit spaces each grid holds.

[0110] The bottom action area playing field (FIG. **4**) measures a height **13** of approximately between 0.1 inches and 50 inches and measures a length **14** of approximately between 0.1 inches and 50 inches. This is the region onto which rectangular marked tiles are placed prior to game start. Players agree before game start how many shapes, colors, words or letters and numbers are to be configured onto the bottom action area playing field.

[0111] The bottom action area playing field is the grid onto which a player places marked rectangular tiles (FIG. **1**, FIG. **2** and FIG. **3**). Question marked tiles (FIG. **2**) and red colored tiles (FIG. **2**) are used exclusively for the outer grid. For this application, a combination of lettered tiles (FIG. **1**), numbered tiles (FIG. **3**), and tiles marked with shapes (FIG. **2**) will be placed onto the spaces of the bottom action area playing field. Players may elect to use only one set of the game elements, or a combination of any two or more sets, for device play.

[0112] The total number of rows, columns, and therefore coordinate spaces, may vary in an actual commercially marketed product. This would naturally determine the total number of game tiles to be used in competition. For this application, there are five rows and six columns holding a total of thirty unit spaces within each grid.

[0113] The height **17** and length **18** of the outer playing field (FIG. **5**), the one visible to all opponents, are congruent to the height **13** and length **14** of the bottom action area playing field. All playing fields are marked with alphanumeric symbols above or below and to the sides of each grid. This allows for appropriate coordinate identification during competition. All playing fields are identical in coordinate labeling.

[0114] The rows of all grids are marked to the side with numbers, and the columns are marked below each grid with letters in this application. However, other renditions of the disclosed invention could use different types of identifiers in marking grid coordinates, such as characters above or below the grids, and colors on the sides.

[0115] During competition, as coordinates are selected, marked rectangular tiles are shifted into out of play positions. This is done by taking the individual tiles from selected coordinates in the bottom action area playing field and placing them onto the spaces of the outer grid. This results in game elements becoming visible to all opponents. An opponent exits competition when all of his or her own symbol and alphanumerically marked rectangular tiles have been discovered, as displayed on the outer playing field.

[0116] The length **16** of any given coordinate within a playing field measures a size of approximately between 0.1 and 50 inches (FIG. **4** and FIG. **5**). The height **15** of any given coordinate within a playing field measures a size of approximately between 0.1 and 50 inches (FIG. **4** and FIG. **5**).

[0117] The width **1** of all rectangular tiles (FIG. **1**, FIG. **2**, and FIG. **3**), is congruent and measures a size of approximately between 0.001 and 10 inches. The height **2** of all rectangular tiles (FIG. **1**, FIG. **2**, and FIG. **3**), is congruent and measures a size of approximately between 0.001 and 10 inches. The length **3** of all rectangular tiles (FIG. **1**, FIG. **2**, and FIG. **3**), is congruent and measures a size of approximately between 0.001 and 10 inches. Typically, the dimensions of the rectangular tiles would be such that they fit within the parameters any coordinate on either of the two grids.

[0118] Commercially marketed versions of this invention may develop the tiles in such a way as to allow some space in between tiles. This would enable players to better grasp the tiles on and off spaces.

[0119] The length of the bottom board **8** and the length of the upper vertical board **11** are congruent with a measure of approximately between 0.1 and 50 inches (FIG. **4** and FIG. **5**). The height of the bottom board **9** and the height of the upper vertical board **10** are congruent with a measure of approximately between 0.1 and 50 inches (FIG. **4** and FIG. **5**). The width of the bottom board **7** and the width of the upper vertical board **12** are congruent with a size measuring approximately between 0.1 and 50 inches (FIG. **4** and FIG. **5**).

[0120] For purposes of discussion in this application, the disclosure will illustrate a short round of play between two participants—Player A and Player B. Keep in mind that that there may be more than two players in a given competition, with each player utilizing a separate game board. For example, FIG. **7** illustrates a positioning of two game boards for player A and Player B. FIG. **8** illustrates a positioning of three game boards for players A, B and C. FIG. **9** illustrates a positioning of four game boards for players A, B, C and D. Therefore, there is no theoretical limit to the number of participants who could play in a given competition.

[0121] Starting with Player A in FIG. **10**, a heart marked rectangular tile **4** is placed into the A5 coordinate of a bottom action area playing field. This is the region that opponents target during competition. FIG. **11** shows the tile **4** fully placed onto the A5 coordinate. Other tiles are configured onto Player A's bottom action area playing field. These include lettered tiles for the words "ON", found on C1 and D1, as well as "BIG" which is assembled on D4, E4, and F4. A tile number "7" is on coordinate A3 and a semicircle marked tile is placed onto F1.

[0122] FIG. **12** shows the game device for Player B where game elements are placed onto the bottom action area playing field. These include a star marked tile on F1, a crescent moon shaped tile on A2, and a wave shaped marked tile on A3, and a lightning bolt marked tile on F3. The number "6" tile appears on B5 and the letters for the word "EAT" are placed onto the coordinates C3, D4, and E5.

[0123] FIG. **13** illustrates how the two game board devices for Players A and B could be positioned in preparation for gameplay.

[0124] During the explanation, this disclosure will show first player B's outer grid as Player A calls out a coordinate. As spaces are selected, the disclosure will illustrate the effect that has on the Player B's outer grid. When Player A picks a space that has no game element prepositioned on it, the turns reverse. At that point this discussion will move to player A's game board and show player B selecting spaces and how that affects player A.

[0125] The first move starts with player A. He or she calls the space D2. This result has player B move a red colored

rectangular tile **6** onto the D2 coordinate (FIG. **14**). FIG. **15** shows the red tile **6** fully placed onto the outer grid. This indicates that there was no game element prepositioned on the Player B Bottom Action Area Playing Field. The turn now goes to Player B.

[0126] Player B selects the A5 space, which in fact has a marked game element. Players have a choice prior to competition: Simply take alphanumeric and other symbol marked tiles from the bottom action area playing field and place them onto the outer grid as selected spaces are called, or utilize question marked **5** tiles. Using such tiles expands the game into one where competitors must actually identify the game elements. In this illustration, the disclosure has the players using the question marked **5** tiles.

[0127] Player A places a question marked tile **5** onto the A5 space (FIG. **16**). FIG. **17** shows the tile **5** fully attached to the outer grid on Player A. Player B now gets another turn to actually guess the element on A5.

[0128] Player B correctly guesses that the heart marked tile **4** rests on A5. Player A removes this tile **4** from the A5 space on his or her bottom action area playing field, as is illustrated on FIG. **18**.

[0129] FIG. **19** shows Player A removing the question marked tile **5** from the A5 space on his or her outer grid, and attaching the heart marked tile **4** in its place on that coordinate. FIG. **20** shows the heart marked tile **4** fully placed onto the A5 space on the outer grid of the Player A game board.

[0130] Player B gets another turn. This time, however, he or she selects the C4 space. Player A has no marked game element on that coordinate on his or her bottom action area playing field. Therefore, FIG. **21** shows Player A attaching a red colored tile **6** onto the outer grid C4 space. FIG. **22** shows the red tile **6** fully attached to the C4 space on the outer grid.

[0131] This game would continue until all the marked game elements on one of the player's targeted bottom action area playing fields have been discovered and placed onto the outer grid of the vertical rectangular board.

1. A Nim game device comprising:

a rectangular closable type playing board, the rectangular closable type playing board including a rectangular lid and a rectangular bottom board which are both of congruent length, height, and width, wherein a rectangular lid and a rectangular bottom board are hinged together on one side so as to be closed, and when opened to an approximate ninety degree angle then reveal two separate playing fields each of congruent dimensions, with each playing field being a rectangular grid defined by a predetermined number of rows and columns which are sectioned into individual unit spaces, with each playing field having an equal number of rows, columns, and unit spaces, and where each unit space of each grid is of congruent dimensions;

a first playing field, located inside a rectangular closable type playing board on a surface of a rectangular bottom board, that is used as an action area for attaching and removing a first set, a second set, and a third set of game pieces from individual unit space coordinates of a first playing field, wherein each individual unit space coordinate of a first playing field is rectangular in dimensions;

a second playing field, located on a surface on top of a rectangular lid, that is used as a display area for attaching and removing a first set, a second set, a third set, a fourth set, and a fifth set of game pieces from individual unit space coordinates of a second playing field, wherein each individual unit space coordinate of a second playing field is rectangular in dimensions;

a perimeter of space equal to one row of grid units surrounding both of the two playing fields such that one side above or below and one side to the left or right of each playing field grid are marked with alphanumeric symbols for the purpose of coordinate identification;

five sets of game pieces in the form of rectangular tiles which measure a length and a height dimension that is less than or equal to a length and a height dimension of each individual unit space coordinate, wherein a first set of game pieces has a letter imprinted onto one side of a rectangular tile, and which is attached to and removed from individual unit space coordinates of a first and a second playing field grids;

a second set of game pieces in the form of rectangular tiles which measure a length and a height dimension that is less than or equal to a length and a height dimension of each individual unit space coordinate, wherein a second set of game pieces has a shape imprinted on one side of a rectangular tile, and which is attached to and removed from individual unit space coordinates of a first and a second playing field grids;

a third set of game pieces in the form of rectangular tiles which measure a length and a height dimension that is less than or equal to a length and a height dimension of each individual unit space coordinate, wherein a third set of game pieces has a number imprinted on one side of a rectangular tile, and which is attached to and removed from individual unit space coordinates of a first and a second playing field grids;

a fourth set of game pieces in the form of rectangular tiles which measure a length and a height dimension that is less than or equal to a length and a height dimension of each individual unit space coordinate, wherein a fourth set of game pieces has a question mark imprinted on one side of a rectangular tile, and which is attached to and removed from individual unit space coordinates of a second playing field grid to indicate that a selected coordinate holds a first set, second set, or third set game piece that has been prepositioned by an opponent on a corresponding coordinate of a targeted first playing field grid and whose identity is unknown, and

a fifth set of game pieces in the form of rectangular tiles which measure a length and a height dimension that is less than or equal to a length and a height dimension of each individual unit space coordinate, wherein a fifth set of game pieces has a red surface imprinted on one side of a rectangular tile, and which is attached to and removed from individual unit space coordinates of a second playing field grid to indicate that no first set, second set, or third set game piece has been prepositioned by an opponent on a corresponding coordinate of a targeted first playing field grid.

2. The Nim game device of claim **1** further including a perimeter of space equal to one row of grid units surrounding a first playing field and a second playing field such that at least one side of each grid is marked with shapes for the purpose of coordinate identification.

3. The Nim game device of claim **1** further including a perimeter of space equal to one row of grid units surrounding

a first playing field and a second playing field such that at least one side of each grid is marked with colors for the purpose of coordinate identification.

4. The Nim game device of claim **1** further including a perimeter of space equal to one row of grid units surrounding a first playing field and a second playing field such that at least one side of each grid is marked with persons or characters for the purpose of coordinate identification.

5. The Nim game device of claim **1** further including game pieces in a form of rectangular tiles which measure dimensions less than or equal to a length and height of each individual unit space coordinate of a first playing field or a second playing field, wherein the game pieces have a color imprinted on one side.

6. The Nim game device of claim **1** further including game pieces in a form of rectangular tiles which measure dimensions less than or equal to a length and height of each individual unit space coordinate of a first playing field or a second playing field, wherein the game pieces have a person or character imprinted on one side.

* * * * *