Aug. 29, 1950 C. E. BENNETT 2,520,111

TERMINAL STRUCTURE FOR ELECTRIC CABLE SYSTEMS

Filed July 23, 1946

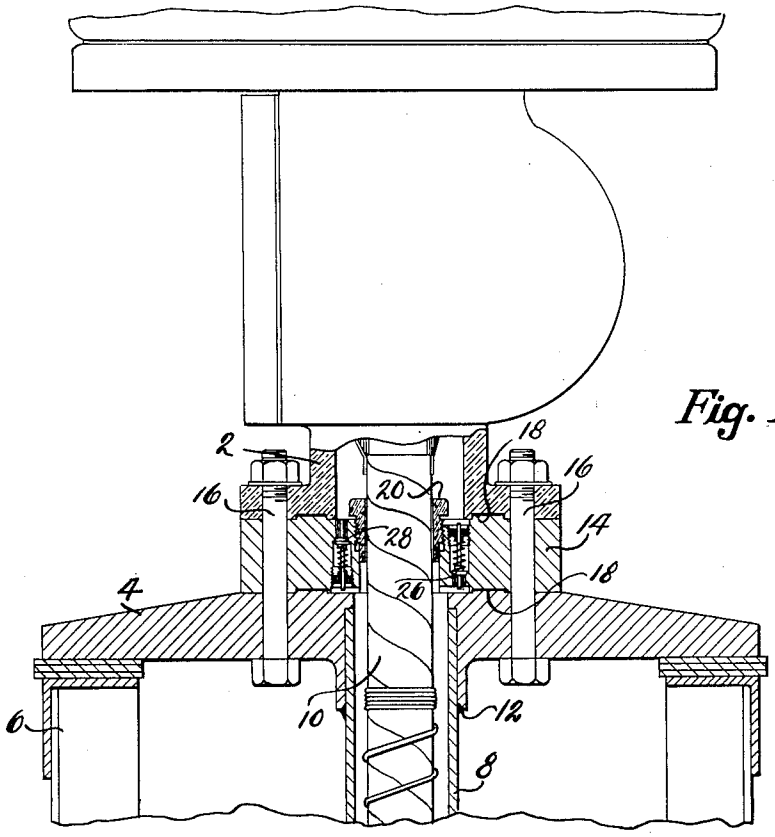

Fig. 1

Fig. 2

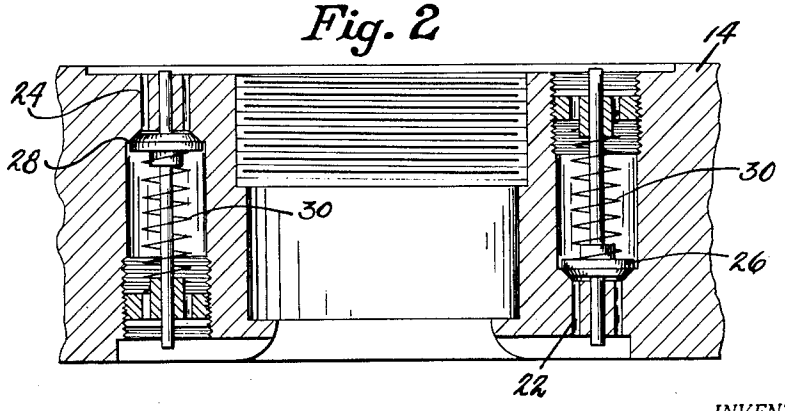

INVENTOR.
Charles E. Bennett
BY
James G. Bethune.

Patented Aug. 29, 1950

2,520,111

UNITED STATES PATENT OFFICE

2,520,111

TERMINAL STRUCTURE FOR ELECTRIC CABLE SYSTEMS

Charles E. Bennett, Ridgewood, N. J., assignor to The Okonite-Callender Cable Company, Incorporated, Paterson, N. J., a corporation of New Jersey

Application July 23, 1946, Serial No. 685,573

1 Claim. (Cl. 174—20)

1

My invention is directed to an improvement in potheads or terminals for electric cable systems, and particularly to cable systems of the type wherein one or more insulated conductors are loosely enclosed in a pipe line which is kept filled with insulating fluid under high pressure of the order of 200 pounds per square inch.

In such systems the pothead or terminal is filled with insulating fluid under the same pressure as the insulating fluid of the pipe line.

Some of the objects of the invention are to provide a pothead or terminal in which draining of the pothead in the event of rupture of the pipe line, draining of the line in the event of rupture of the terminal and the building up of excessive pressures in the terminal are prevented.

The invention is primarily concerned with the mounting of the pothead, and for this reason a showing of the upper part of the pothead has been omitted from the drawings.

In the accompanying drawings wherein I have illustrated an embodiment of my invention:

Fig. 1 is a sectional elevational view of the invention; and

Fig. 2 is a similar view on an enlarged scale of the check plate of Fig. 1.

Referring to the drawings in detail:

As above pointed out, my invention concerns potheads or terminals for electric cable systems wherein the cable conductors are enclosed in a pipe line kept filled with insulating fluid at superatmospheric pressure, conventionally around 200 pounds per square inch.

In the accompanying drawing 2 designates the pothead bushing or insulator. 4 designates the mounting plate for the bushing or insulator, and 6, the steel work upon which the mounting plate is supported.

8 designates the riser pipe through which the cable conductor 10 extends into the bushing or insulator 2, the conductor it being appreciated, extending to the top of the bushing.

The riser pipe 8 it is to be understood, is in free communication with the pipe line (not shown) of the system, so that the pothead bushing or insulator is filled with insulating fluid which is normally at the same high pressure as the insulating fluid in the pipe line.

The riser pipe 8 extends well up into the mounting plate 4 to which it is brazed as shown at 12.

The terminal bushing or insulator 2 rests directly upon a check plate 14, this plate resting upon the mounting plate 4.

The insulator 2, check plate 14 and mounting

2

plate 4 are bolted together by bolts 16, gaskets 18 providing the necessary fluid tight seal between these three members.

20 designates a bronze or other metal thimble which is threaded into the upper face of the check plate 16. The insulated cable conductor 10 passes through this thimble.

The check plate 14, which is of metal, is provided with through ports 22 and 24, these ports being controlled by valves 26 and 28 respectively. The valve 26, it will be observed, seats away from the bushing, while the valve 28 seats in the opposite direction or toward the bushing. Each valve is provided with a loading spring 30 which is set at some pressure less than the system pressure, for example, 25 pounds.

When the system is being filled initially, it will be appreciated that the valve 26 will unseat when the system pressure exceeds 25 pounds, assuming that is the pressure the valve springs have been set at. The result is of course, that the terminal bushing will be filled with insulating fluid at system pressure.

Under normal operating conditions the valves 26 and 28 will be held seated by their respective springs. Should the pipe line of the system be ruptured from any cause, it will be understood that the valve 28 will open for the short time necessary to bring the pressure in the insulator down to that corresponding to the spring loading of the valve, whereupon the valve will close again. Likewise, should the insulator be ruptured, the valve 26 will open for the short time necessary to bring the pressure in the pipe line down to that corresponding to the spring loading of the valve, whereupon the valve will close again.

In this way, draining of the insulator in the event of rupture of the pipe line and draining of the pipe line in the event of rupture of the insulator are prevented.

My construction also provides against the building up of excessive pressures in the terminal. Normally the terminal pressure, as already explained, is substantially the same as the system pressure. However, should the pressure in the terminal rise as from atmospheric conditions for example, or other cause, then the valve 28 will unseat to relieve this pressure.

It is to be understood that changes may be made in the details of construction and arrangement of parts hereinabove described without departing from the spirit and scope of my invention.

What I claim is:

A terminal construction for electric cable sys-

tems of the type wherein the cable is loosely enclosed in a pipe line filled with insulating fluid under pressure, said terminal construction comprising in combination a hollow terminal insulator, a mounting plate therefor at the base of the insulator, a riser pipe in free communication with the pipe line of the system, said mounting plate being provided with an opening therethrough for the reception of the end of the riser pipe, a check plate intermediate the insulator and mounting plate, the cable conductor extending through the riser pipe, mounting plate and check plate into the insulator, ports in said check plate so positioned that the insulating fluid in the pipe line can pass up through the riser plate about the cable conductor and through the check plate into said insulator, oppositely seating valves for controlling the check plate ports, a closing spring for each valve holding said valves closed under normal pressure conditions in the pipe line and insulator; one of said valves opening momentarily against the action of its spring upon rupture of the pipe line until the pressure in the insulator

has dropped to that corresponding to the spring loading of the valve; the other of said valves opening momentarily against the action of its spring upon rupture of the insulator until the pressure in the pipe line has dropped to that corresponding to the spring loading of the valve, thereby to prevent draining of the insulator due to pipe line rupture and draining of the pipe line due to insulator rupture.

CHARLES E. BENNETT.

REFERENCES CITED

The following references are of record in the file of this patent:

UNITED STATES PATENTS

Number	Name	Date
2,071,102	Atkinson et al.	Feb. 16, 1937
2,116,419	Wetherill	May 3, 1938

FOREIGN PATENTS

Number	Country	Date
126,879	Austria	Feb. 25, 1932