(19) LE GOUVERNEMENT
DU GRAND-DUCHÉ DE LUXEMBOURG
Ministère de l'Économie

(11) N° de publication : **LU508700**

(12) **BREVET D'INVENTION** **B1**

(21) N° de dépôt: LU508700

(22) Date de dépôt: 28/10/2024

(51) Int. Cl.:
A01G 2/00, A01C 1/00, E01C 1/00

(30) Priorité:

(43) Date de mise à disposition du public: 29/04/2025

(47) Date de délivrance: 29/04/2025

(73) Titulaire(s):
CHONGQING VOCATIONAL INSTITUTE OF ENGINEERING – 402247 Chongqing (China)

(72) Inventeur(s):
WANG Ren – China

(74) Mandataire(s):
Dennemeyer & Associates S.A. – L-1274 HOWALD (Luxembourg)

(54) **A green plant cultivation device for urban landscape design.**

(57) The invention provides a green plant cultivation device for urban landscape design, belonging to the technical field of greening A water storage assembly comprising a base bracket roof for collecting and storing rainwater The utility model effectively collects and initially filters rainwater by arranging a "Y" shaped drainage groove at the top of the top plate and a baffle plate with a screen inside the water storage assembly. The structure formed by the support and the top plate can not only be used as a platform for rainwater collection, but also provide necessary support and protection for green planting cultivation below At the same time, through the design of lifting water storage tank, the spatial layout is optimized, so that the water can be evenly and delicately covered on the green plants to promote the absorption of plants.

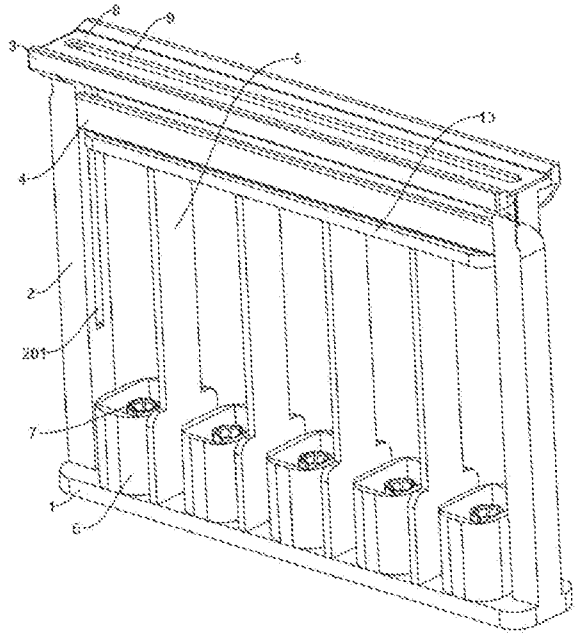

Fig. 1

LU508700

A green plant cultivation device for urban landscape design

Technical fields

The present invention relates to the field of greening technology, and particularly relates to a green plant cultivation device for urban landscape design.

Background technology

Urban landscape refers to the visual environment which is composed of various natural landscape elements and artificial landscape elements within the urban area. This environment reflects the city's historical, cultural, social, economic and ecological characteristics, but also closely related to the quality of life of urban residents and the sustainable development of the city, in the process of designing the urban landscape, usually need to use the cultivation device to cultivate the planting of green plants.

However, in the practice of urban landscape design, although the introduction of green plants plays a significant role in improving the beauty of the city, improving the ecological environment, and enhancing the happiness of residents, the traditional planting methods of green plants often face challenges such as poor water resource management, low space utilization efficiency, and high maintenance costs. Especially in today's increasingly tense water resources, how to effectively collect and utilize rainwater resources and how to efficiently arrange green plants in limited urban space have become urgent problems. Therefore, the invention provides a green plant cultivation device for urban landscape design to meet the demand.

Invention content

In order to solve the above technical problems, the present invention provides the following technical solutions:

An urban landscape design with green plant cultivation device, including a base, the top two ends of the base are fixedly connected to the bracket, the top of the two said bracket is fixedly connected to the top plate; water storage component, the water storage component is used for the collection and storage of rainwater, the water storage component is connected to the top plate; planting component, the planting component is used for the cultivation and planting of green plants, the planting component is connected to the base.

Optionally, the water storage component comprises a "Y" shaped drainage groove arranged on the top of the top plate, a baffle is clamped inside the drainage groove, a straight groove shaped installation chamber is arranged inside the baffle, and a screen is fixedly connected inside the installation chamber.

Optionally, the bottom of said baffle plate is provided with a fitting plate on both sides of the mounting cavity, said fitting plate comprising a straight fitting

part which is fitted to the linear inner wall of the drainage channel, said fitting part is provided with a tilted fitting part which is connected to the baffle plate at the top of said fitting part, said bottom end of said fitting plate is fixedly connected with a guiding column, said guiding column having a diameter value larger than the width value of the fitting plate.

Optionally, two said brackets are provided with guide rails on opposite sides, said guide rails are provided with transmission components, said transmission components include a transmission screw set inside the guide rails, said transmission screw is provided with a drive motor at the top of said transmission screw, said transmission screw is externally threaded with a transmission block, said transmission block is fixedly connected with a lifting plate at one end, and said lifting plate is fixedly connected with a water tank at the top of said lifting plate.

Optionally, the top of said water storage tank is fixedly connected to the bottom of the diversion tank through a diversion pipe, the bottom of said lifting plate is provided with a fogging nozzle, the top of said lifting plate is provided with a water pump, one end of said water pump is fixedly connected to the input end of the fogging nozzle through a No.1 conduit, and the other end of said water pump is fixedly connected to the inside of the water storage tank through a No.2 conduit.

Optionally, said planting assembly comprises a cultivation box fixedly connected to the top of the base and located directly below the atomizing nozzle, a plurality of said cultivation boxes being separated from each other by a number of partitions, and each of said cultivation boxes being provided with a cultivation member inside.

Optionally, said cultivation member includes a plurality of connection parts fixedly connected to the bottom of the inner cavity of the cultivation box, a plurality of said connection parts are arranged in a circular array centered on the axis of the inner cavity of the cultivation box, and each of said connection parts is provided with a half-arc shaped support portion at the top of said connection parts, and the inner cavity formed by a plurality of said support portions is used for planting green plants.

Optionally, each of said support portions is provided with a semi-arcuate guide portion at the top, said support portion is provided with an arcuate portion number one and an arcuate portion number two on a side facing the axis of the cultivation box, said arcuate portion number one and arcuate portion number two are provided with a deformation cavity between said arcuate portion number one and arcuate portion number two and the support portion, and said arcuate portion number one and arcuate portion number two are provided with a separating portion on an opposite side of said arcuate portion number one and arcuate portion number two.

Optionally, each of the four corners of the bottom of each said top plate is fixedly connected with inclined-set inclined plates, and the other ends of each of the four said inclined plates are fixedly connected with the two sides of the

bracket.

The present invention has at least the following beneficial effects compared to the prior art:

In the above scheme, the rainwater is effectively collected and preliminarily filtered by setting water storage components, including the "Y" shaped drainage trough on the top of the roof and the baffle design with screen mesh inside, which not only uses the natural precipitation resources, but also avoids the blockage of impurities to the subsequent irrigation system. The structure formed by the support and the roof is not only used as the platform for rainwater collection, It also provides necessary support and protection for the green plant cultivation below. At the same time, through the design of the lifting water storage tank, the irrigation height can be adjusted according to the actual needs of plant growth, and the spatial layout can be optimized, so that the water can be evenly and carefully covered on the green plants, promoting plant absorption and reducing water waste.

In the above program, through the setup of cultivation components, its internal cultivation parts are cleverly designed, not only to play a protective role for the plant root system, but also through the unique structure to promote the decentralized growth of the plant root system, cultivation parts by a number of connecting part of the ring in the bottom of the inner cavity of the cultivation box, each connecting part of the top of the half-arc shape of the support part, the support part of the common enclosure of the roots of the green plant into a space suitable for the development of the space. The semi-curved design of the support section not only provides stable support for the plant root system, but also guides the root system to grow naturally along the curved surface of the support section, avoiding the nutrient competition and growth restriction caused by the over-concentration of the root system.

Further, the top of each support section is designed with a semi-curved guide section, as well as curved section one and curved section two, which form a deformation cavity between them and the support section. This design allows the plant root system to be compressed against the deformation cavity as it thickens and expands during the growth process, thus further dispersing the root system and increasing the contact area between the root system and the soil. This not only improves the water absorption efficiency of green plants, but also promotes the absorption and utilization of nutrients in the soil by the root system, which is conducive to the healthy growth of green plants.

In addition, the setting of the separation section, in the first arc section and the second arc section of the relative surface, for different kinds of green plant root system provides a relatively independent growth space, reducing the root system of mutual interference, is conducive to maintaining the root system of the good ventilation and drainage, and further enhance the growth environment of the green plant.

The accompanying illustration

The accompanying drawings, which are incorporated herein and form part

of the specification, illustrate embodiments of the present invention and, together with the specification, are further utilized to explain the principles of the present invention and to enable those skilled in the art to implement and use the invention.

Figure 1 is a schematic diagram of the three-dimensional structure of the green plant cultivation device for urban landscape design;

Figure 2 shows a schematic diagram of the side three-dimensional structure of the cultivation device;

Figure 3 is the enlarged schematic diagram at A of Figure 2;

Figure 4 shows a top view of the cultivation device;

Figure 5 shows a schematic diagram of the mating three-dimensional structure of the cultivation box;

Figure 6 shows a schematic diagram of the mating three-dimensional structure of the cultivation member.

Attachment Marker

1, base; 2, bracket; 201, guide rail; 3, top plate; 4, water storage tank; 5, partition; 6, cultivation box; 7, cultivation member; 701, connecting part; 702, supporting part; 703, guiding part; 704, No. 1 curved part; 705, deformation cavity; 706, No. 2 curved part; 707, separating part; 8, baffle plate; 9, sieve mesh; 10, affixed plate; 11, guiding column; 12, inclined plate; 13, lifting plate. 12, Inclined plate; 13, Lifting plate.

As shown in the drawings, in order to be able to clearly realize the structure of the embodiments of the present invention, specific structures and devices are marked in the drawings, but this is only for the purpose of schematic needs, and it is not intended to limit the present invention to the specific structures, devices and environments, and according to the specific needs, the person of ordinary skill in the field can adjust or modify these devices and environments.

Specific implementations

The following is a detailed description of a green plant cultivation device for urban landscape design provided by the present invention in combination with the accompanying drawings and specific embodiments. At the same time here to make it clear that, in order to make the embodiments more detailed, the following embodiments for the best, preferred embodiments, for some of the well-known technology in the field of technical personnel can also be used in other alternative ways to implement; and the accompanying drawings are only partially more specific description of the embodiments, and is not intended to be a specific limitation of the present invention.

As shown in Figures 1 to 4, the embodiment of the invention provides a green plant cultivation device for urban landscape design, including a base 1, both ends of the top of the base 1 are fixedly connected with a bracket 2, and the top of the two brackets 2 are fixedly connected with a top plate 3; The water storage component is used for collecting and storing rainwater. The

water storage component is connected with the roof 3. The water storage component includes a "Y" shaped drainage groove set on the top of the roof 3. The inside of the drainage groove is clamped with a baffle 8. The inside of the baffle 8 is set with a straight groove shaped installation chamber. The inside of the installation chamber is fixedly connected with a screen 9. The bottom of the baffle 8 is located on both sides of the installation chamber and is provided with a bonding plate 10, The adhesive plate 10 includes a linear adhesive part which is adhesive to the linear inner wall of the drainage slot. The top of the adhesive part is provided with an inclined adhesive part which is connected with the baffle plate 8. The bottom end of the adhesive plate 10 is fixedly connected with a guide column 11. The diameter of the guide column 11 is greater than the width of the adhesive plate 10. The opposite sides of the two brackets 2 are provided with a guide rail 201. The inner part of the guide rail 201 is provided with a transmission component, The transmission component comprises a transmission screw arranged inside the guide rail 201, the top of the transmission screw is provided with a drive motor, the external thread of the transmission screw is connected with a transmission block, one end of the transmission block is fixedly connected with a lifting plate 13, the top of the lifting plate 13 is fixedly connected with a water storage tank 4, the top of the water storage tank 4 is fixedly connected with the bottom of the drainage groove through a drainage pipe, and the bottom of the lifting plate 13 is provided with an atomizing nozzle, The top of the lifting plate 13 is equipped with a water pump. One end of the water pump is fixedly connected with the input end of the atomizing nozzle through the No. 1 conduit, and the other end of the water pump is fixedly connected with the interior of the water storage tank 4 through the No. 2 conduit. The four corners at the bottom of each top plate 3 are fixedly connected with inclined plates 12, and the other end of the four inclined plates 12 is fixedly connected with both sides of the bracket 2. When rain occurs, Rainwater first falls on roof 3. As the top of roof 3 is designed as a "Y" shaped drainage slot, rainwater is effectively guided into the drainage slot. When rainwater flows in the drainage slot, it is preliminarily filtered through the screen 9 in baffle 8 to remove large particle impurities, such as leaves, dust, etc. The filtered rainwater flows into the water storage tank 4 through the drainage pipe for storage for subsequent irrigation. According to the growth needs of green plants, By driving the motor to drive the driving screw to rotate, the driving block and lifting plate 13 are driven to move up and down in the guide rail 201. The lifting plate 13 moves up and down, realizing the height adjustment of the water storage tank 4, so that the position of the atomizing nozzle can be adjusted according to the height of the green plants and the irrigation demand. When irrigation is required, start the water pump, and pump the water in the water storage tank 4 to the water pump through the No. 2 conduit, Then it is delivered to the atomizing nozzle through the No. 1 conduit, and the atomizing nozzle sprays water evenly on the green plants after atomization to achieve precise irrigation and reduce water

resource waste. The four inclined plates 12 at the bottom of the roof 3 are fixedly connected to both sides of the support 2, which enhances the stability of the whole device and prevents dumping in severe weather such as strong wind. At the same time, the design of inclined plate 12 also gives the device certain aesthetic value, It can not only play a practical role in the urban landscape, but also become a beautiful landscape. Through the design of "Y" shaped drainage trough and screen 9, it can achieve the effective collection and preliminary filtration of rainwater, improve the utilization rate of water resources. The lifting design of water storage tank 4 makes the irrigation system more flexible, can adjust the height according to the growth needs of green plants, and achieve precision irrigation efficiency, The waste of water resources is reduced. The design of inclined plate 12 not only enhances the stability of the device, but also improves the overall beauty of the device.

In this embodiment, as shown in FIGS. 1 to 6, the planting component is used for cultivation and planting of green plants, the planting component is connected to the base 1, the planting component includes a cultivation box 6 fixedly connected to the top of the base 1 and is located directly below the atomizing nozzle, a plurality of cultivation boxes 6 are separated by a number of partitions 5, each cultivation box 6 is provided with cultivation parts 7, the cultivation parts 7 include a plurality of connection sections 701 fixedly connected to the bottom of the inner cavity of the cultivation box 6, a plurality of connection sections 701 in a circular array centered on the axis of the inner cavity of the cultivation box 6, each connection section 701 is provided with a semi-curved support section 701 on top of the inner cavity. Cultivation member 7 includes a plurality of connection sections 701 fixedly connected to the bottom of the inner cavity of the cultivation box 6, a plurality of connection sections 701 are arranged in a circular array centered on the axis of the inner cavity of the cultivation box 6, each connection section 701 is provided with a half-arc shaped support section 702 at the top of each connection section 701, and an inner cavity formed by a plurality of support sections 702 is used for planting of green plants, each support section 702 is provided with a half-arc shaped guiding section 703 at the top of each support section 702, and the side of the support section 702 oriented to the axis of the cultivation box 6 is equipped with a A first arc-shaped part 704 and a second arc-shaped part 706, a deformation cavity 705 is provided between the first arc-shaped part 704 and the second arc-shaped part 706 and the support part 702, and a separation part 707 is provided on the opposite sides of the first arc-shaped part 704 and the second arc-shaped part 706, and in the process of cultivation, the planting assembly first separates the space at the top of the base 1 into a plurality of cultivation boxes 6 through the partition plate 5, and a cultivator 7 is provided inside each of the cultivation boxes 6. Each cultivation box 6 is equipped with a cultivation member 7. the cultivation member 7 consists of a plurality of connecting parts 701 circularly arranged at the bottom of the inner cavity of the cultivation box 6, forming a stable support structure, in the inner cavity

composed of a plurality of support parts 702, the grower can grow different types of greenery according to the needs of the grower. The semi-curved design of the support section 702 not only provides good support for the green plants, but also guides the root system to grow along the curved surface dispersed, with the growth of the green plants, the root system will gradually expand and fill the deformation of the cavity 705.The deformation of the cavity 705 between the first curved section 704 and the second curved section 706 and the support section 702 allows the root system to produce a certain degree of extrusion during the growth process, which further disperses the root system to avoid over-concentration of the root system resulting in nutrient deficiency, and to avoid the over concentration of nutrients. The root system is further dispersed to avoid nutrient competition and growth restriction caused by over-concentration of the root system. At the same time, the setting of the separation section 707, for different kinds of green plant root system provides a relatively independent growth space, reducing the mutual interference between the root system, when the water in the elevated water tank 4 through the atomization nozzle uniformly fine spray on the green plant, the water can quickly penetrate into the soil where the root system is located (or cultivation medium). Due to the design of the support portion 702 and the guiding portion 703 thereon, the water can be more evenly distributed around the root system, which promotes the full absorption of water by the greenery, and the grower can regularly observe the growth condition of the greenery and adjust the irrigation height and the irrigation volume as required to ensure that the greenery obtains the optimal growth conditions, and the design of the cultivation member 7, in particular, the setting of the deformation cavity 705 and the separation portion 707, provides a more favorable condition for the green plant root system, and the cultivation member 7 is designed to provide a better environment for the green plant root system. The design of cultivator 7, especially the setting of deformation cavity 705 and partition 707, provides a more spacious and decentralized growing space for the root system of green plants, which is conducive to the healthy growth of the root system and the full absorption of nutrients, the fixed connection between cultivator 7 and cultivation box 6, as well as the setting of partition 5, enhances the stability of the whole planting assembly and ensures the safety of the green plants in the process of growing, the exquisite design of the planting assembly and the strong growth of the green plants, which together enhance the overall aesthetic quality of the urban landscape, provide more comfortable, more comfortable, more comfortable, and more comfortable for the residents of urban areas. Provide a more comfortable and pleasant living environment for urban residents.

The working principle provided by the invention is that when rain occurs, the rain first falls on the roof 3. As the top of roof 3 is designed as a "Y" shaped drainage slot, rainwater is effectively guided into the drainage slot. When rainwater flows in the drainage slot, it is preliminarily filtered through the

screen 9 in baffle 8 to remove large particle impurities, such as leaves, dust, etc. The filtered rainwater flows into the water storage tank 4 through the drainage pipe for storage for subsequent irrigation. According to the growth needs of green plants, By driving the motor to drive the driving screw to rotate, the driving block and lifting plate 13 are driven to move up and down in the guide rail 201. The lifting plate 13 moves up and down, realizing the height adjustment of the water storage tank 4, so that the position of the atomizing nozzle can be adjusted according to the height of the green plants and the irrigation demand. When irrigation is required, start the water pump, and pump the water in the water storage tank 4 to the water pump through the No. 2 conduit, Then it is delivered to the atomizing nozzle through the No. 1 conduit. The atomizing nozzle atomizes the water and evenly sprays it on the green plants to achieve precision irrigation and reduce water resource waste. The four inclined plates 12 at the bottom of the roof 3 are fixedly connected to both sides of the support 2, which enhances the stability of the whole device and prevents tipping in severe weather such as strong wind. During the cultivation process, The planting component first separates the space at the top of the base 1 into a plurality of cultivation boxes 6 through the partition plate 5, and each cultivation box 6 is internally provided with cultivation pieces 7. Cultivated piece 7 is ringwise arranged at the bottom of the inner cavity of cultivation box 6 by a plurality of connecting parts 701 to form a stable supporting structure. In the inner cavity composed of a plurality of supporting parts 702, growers can plant different types of green plants as required. The semi arc design of the support 702 not only provides good support for green plants, but also guides the roots to grow dispersedly along the curved surface. With the growth of green plants, the roots will gradually expand and fill the deformation cavity 705. The design of deformation cavity 705 between No. 1 arc part 704, No. 2 arc part 706 and support part 702 allows the root system to produce certain extrusion during the growth process, so as to further disperse the root system and avoid the nutrient competition and growth restriction caused by excessive concentration of the root system. At the same time, the setting of the separator 707 provides a relatively independent growth space for the roots of different kinds of green plants, reducing the mutual interference between roots. When the water in the elevating water storage tank 4 is evenly and finely sprayed on the green plants through the atomizing nozzle, the water can quickly penetrate into the soil (or cultivation medium) where the roots are located. Due to the design of the support 702 and its upper guide 703, the water can be more evenly distributed around the root system, promoting the full absorption of water by green plants. The growers can regularly observe the growth of green plants, and adjust the irrigation height and amount as needed to ensure that green plants obtain the best growth conditions.

The present invention covers any substitutions, modifications, equivalent methods, and programs made in the essence and scope of the present invention. In order to provide the public with a thorough understanding of the

present invention, specific details are described in detail in the following preferred embodiments of the present invention, and the invention can be fully understood by those skilled in the art without such detailed descriptions. Furthermore, in order to avoid unnecessary confusion as to the substance of the present invention, well-known methods, processes, flows, components, circuits, and the like have not been described in detail.

The above is only a preferred embodiment of the present invention, it should be pointed out that, for the person of ordinary skill in the art, without departing from the principle of the present invention under the premise, can also make a number of improvements and embellishments, these improvements and embellishments should also be regarded as the scope of protection of the present invention.

Claims

1.A kind of green plant cultivation device for urban landscape design, including a base (1), characterized in that both ends of the top of the said base (1) are fixedly connected with a bracket (2), and the top of the two said brackets (2) are fixedly connected with a top plate (3);

A water storage unit, said water storage unit being used for the collection and storage of rainwater, said water storage unit being connected to the top plate (3);

Planting assembly, said planting assembly being used for cultivation and planting of green plants, said planting assembly being connected to a base (1).

2.The green plant cultivation device for urban landscape design according to claim 1, which is characterized in that the water storage component comprises a "Y" shaped drainage groove arranged on the top of the roof (3), the inside of the drainage groove is clamped with a baffle plate (8), the inside of the baffle plate (8) is provided with a straight groove shaped installation cavity, and the inside of the installation cavity is fixedly connected with a screen mesh (9).

3. A green plant cultivation device for urban landscape design according to claim 2, characterized in that said baffle plate (8) is provided with a fitted plate (10) at the bottom of the baffle plate (8) on both sides of the mounting cavity, said fitted plate (10) comprising a linear fitted portion which is adhered to the linear inner wall of the diversion channel, said fitted portion is provided with a tilted fitted portion which is connected to the baffle plate (8) at the top of said fitted portion, said fitted plate (10) is fixedly connected with a guiding column (11) at the bottom of said guiding column (11), said guiding column (11) having a diameter value larger than the width value of said guiding column (11). The bottom end of said plate (10) is fixedly connected to a guide post (11), said guide post (11) having a diameter greater than the width of the plate (10).

4. A green plant cultivation device for urban landscape design according to claim 3, characterized in that two said brackets (2) are provided with guide rails (201) on opposite sides, said guide rails (201) are provided with a transmission assembly, said transmission assembly includes a transmission screw set in the interior of the guide rails (201), said transmission screw is provided with a drive motor at the top of the transmission screw, said transmission screw is threaded with a transmission block, one end of said transmission block is fixedly connected with a lift plate (13), said lift plate (13) is fixedly connected with a water storage tank (4) at the top of the lift plate (13), and said drive screw is connected with a water tank (4) at the top of the lift plate (13). There is a transmission block connected to the outside of the transmission screw, one end of the transmission block is fixedly connected to a lift plate (13), and the top of the lift plate (13) is fixedly connected to a water storage tank (4).

5.The green plant cultivation device for urban landscape design according

to claim 4, characterized in that the top of said water storage tank (4) is fixedly connected to the bottom of the diversion tank through a diversion pipe, the bottom of said elevation plate (13) is provided with a fogging nozzle, the top of said elevation plate (13) is provided with a water pump, and one end of said water pump is fixedly connected to the input end of the fogging nozzle through the No. 1 conduit, and the other end of said pump is fixedly connected to the inner part of the fogging nozzle through the No. 2 conduit, and the other end of said pump is fixedly connected to the inner part of the fogging nozzle through the No. 2 conduit. The other end of said water pump is fixedly connected to the inside of the water storage tank (4) through the second conduit.

6.Cultivation device for green plants for urban landscape design according to claim 5, characterized in that said cultivation assembly comprises a cultivation box (6) fixedly connected to the top of the base (1) and located directly below the atomizing nozzle, a plurality of said cultivation boxes (6) being separated from each other by a number of partitions (5), and each of said cultivation boxes (6) being provided with cultivation members (7) inside.

7.Cultivation device for green plants for urban landscape design according to claim 6, characterized in that said cultivation member (7) comprises a plurality of connecting parts (701) fixedly connected to the bottom of the inner cavity of the cultivation box (6), a plurality of said connecting parts (701) are arranged in a circular array centered on the axis of the inner cavity of the cultivation box (6), and a semi-curved support part (702) is provided at the top of each said connecting part (701), and the inner cavity formed by a plurality of said support parts (702) is used for planting green plants. The inner cavity comprising a plurality of said support portions (702) is used for green planting.

8.Cultivation device for green plants for urban landscape design according to claim 7, characterized in that each of said support portions (702) is provided with a half-arc guiding portion (703) at the top, said support portion (702) is provided with an arc-shaped portion (704) and an arc-shaped portion (706) on the side facing the axis of the cultivation box (6), said arc-shaped portion (704) and arc-shaped portion (706) and the support portion (702), said arcuate portion (704) and arcuate portion (706) being provided with a deformation cavity (705), and said arcuate portion (704) and arcuate portion (706) being provided with a dividing portion (707) on the opposite side of said arcuate portion (704) and arcuate portion (706).

9.The green plant cultivation device for urban landscape design according to claim 3, characterized in that each of the four corners of the bottom of each said top plate (3) is fixedly connected with inclined-set slanting boards (12), and the other ends of each of the four said slanting boards (12) are fixedly connected with the two sides of the bracket (2).

Patentansprüche

1.Eine Art von Grünpflanzenanbauvorrichtung für die städtische Landschaftsgestaltung, die einen Sockel (1) umfasst, dadurch gekennzeichnet, dass beide Enden der Oberseite des Sockels (1) fest mit einem Träger (2) verbunden sind und die Oberseite von zwei Trägern (2) fest mit einer oberen Platte (3) verbunden ist;

Eine Wasserspeichereinheit, wobei die Wasserspeichereinheit zum Sammeln und Speichern von Regenwasser verwendet wird, wobei die Wasserspeichereinheit mit der oberen Platte (3) verbunden ist;

Bepflanzungseinheit für die Kultivierung und Bepflanzung von Grünpflanzen, wobei die Bepflanzungseinheit mit dem Sockel (1) verbunden ist.

2.Vorrichtung zum Anbau von Grünpflanzen für die städtische Landschaftsgestaltung nach Anspruch 1, dadurch gekennzeichnet, dass die Wasserspeicherkomponente eine „Y"-förmige Entwässerungsrinne umfasst, die oben auf dem Dach (3) geöffnet ist, und die interne Klemmung der Entwässerung Im Trog ist eine Prallwand (8) vorgesehen, im Inneren der Prallwand (8) ist ein gerader, nutförmiger Einbauhohlraum vorgesehen und mit der Innenseite des Einbauhohlraums ist ein Sieb (9) fest verbunden.

3.Die Vorrichtung zur Kultivierung von Grünpflanzen für die städtische Landschaftsgestaltung nach Anspruch 2, dadurch gekennzeichnet, dass der Boden der Prallplatte (8) auf beiden Seiten des Befestigungshohlraums mit Laminierplatten (10) versehen ist, wobei die Laminierplatte (10) einen geraden Laminierabschnitt umfasst, der auf die lineare Innenwand der Umleitungsnut laminiert, wobei die Oberseite des Laminierabschnitts mit einem geneigten Laminierabschnitt versehen ist, der mit der Prallplatte (8) verbunden ist, wobei das untere Ende der Laminierplatte (10) fest mit einer Führungssäule (11) verbunden ist, wobei der Durchmesserwert der Führungssäule (11) größer als der Breitenwert der Führungssäule (11) ist. Das untere Ende der eingepassten Platte (10) ist fest mit einer Führungssäule (11) verbunden, wobei der Durchmesser der Führungssäule (11) größer ist als die Breite der eingepassten Platte (10).

4.Grüne Pflanzenkultivierungsvorrichtung für die städtische Landschaftsgestaltung nach Anspruch 3, dadurch gekennzeichnet, dass zwei der Halterungen (2) mit Führungsschienen (201) auf gegenüberliegenden Oberflächen versehen sind, wobei die Führungsschienen (201) mit einer Übertragungsanordnung versehen sind, wobei die Übertragungsanordnung eine Übertragungsschraube umfasst, die in die Führungsschienen (201) eingesetzt ist, wobei die Übertragungsschraube mit einem Antriebsmotor an der Oberseite versehen ist, wobei die Übertragungsschraube mit einem Übertragungsblock verschraubt ist, wobei ein Ende des Übertragungsblocks fest mit einer Hebeplatte (13) verbunden ist, wobei die Hebeplatte (13) fest mit einem Wasserspeichertank (4) an der Oberseite der Hebeplatte (13)

verbunden ist, wobei die Hebeplatte (13) fest mit einem Wassertank (4) an der Oberseite der Hebeplatte (13) verbunden ist. Es gibt einen Übertragungsblock, der mit der Außenseite der Übertragungsschnecke verbunden ist, ein Ende des Übertragungsblocks ist fest mit einer Hubplatte (13) verbunden, und die Oberseite der Hubplatte (13) ist fest mit einem Wasserspeichertank (4) verbunden.

5.Die Vorrichtung zur Kultivierung von Grünpflanzen für die städtische Landschaftsgestaltung nach Anspruch 4, dadurch gekennzeichnet, dass die Oberseite des Wasserspeichertanks (4) fest mit dem Boden des Umleitungsbehälters durch ein Umleitungsrohr verbunden ist, die Unterseite der Hebeplatte (13) mit einer Nebeldüse versehen ist, die Oberseite der Hebeplatte (13) mit einer Wasserpumpe versehen ist und ein Ende der Wasserpumpe fest mit dem Eingangsende der Nebeldüse durch die Leitung Nr. 1 verbunden ist und das Das andere Ende der Wasserpumpe ist durch die zweite Leitung fest mit dem Inneren des Wasserspeichertanks (4) verbunden.

6.Kultivierungsvorrichtung für Grünpflanzen für die städtische Landschaftsgestaltung nach Anspruch 5, dadurch gekennzeichnet, dass die Kultivierungsanordnung einen Kultivierungskasten (6) umfasst, der fest mit der Oberseite der Basis (1) verbunden ist und sich direkt unter der Zerstäubungsdüse befindet, wobei eine Vielzahl der Kultivierungskästen (6) durch eine Anzahl von Trennplatten (5) voneinander getrennt ist und jeder der Kultivierungskästen (6) mit Kultivierungselementen (7) im Inneren versehen ist.

7.Kultivierungsvorrichtung für Grünpflanzen für die städtische Landschaftsgestaltung nach Anspruch 6, dadurch gekennzeichnet, dass das Kultivierungselement (7) eine Vielzahl von Verbindungsteilen (701) umfasst, die fest mit dem Boden des inneren Hohlraums des Kultivierungskastens (6) verbunden sind, wobei eine Vielzahl der Verbindungsteile (701) in einer kreisförmigen Anordnung angeordnet sind, die auf die Achse des inneren Hohlraums des Kultivierungskastens (6) zentriert ist, und ein halb gekrümmtes Stützteil (702) an der Oberseite jedes Verbindungsteils (701) vorgesehen ist, und der innere Hohlraum, der durch eine Vielzahl der Stützteile (702) gebildet wird, für Grünpflanzen verwendet wird. Der innere Hohlraum, der eine Vielzahl der Stützteile (702) umfasst, wird für Grünpflanzen verwendet.

8.Kultivierungsvorrichtung für Grünpflanzen für die städtische Landschaftsgestaltung nach Anspruch 7, dadurch gekennzeichnet, dass jeder der Stützabschnitte (702) mit einem halbbogenförmigen Führungsabschnitt (703) an der Oberseite versehen ist, der Stützabschnitt (702) mit einem bogenförmigen Abschnitt (704) und einem bogenförmigen Abschnitt (706) auf der Seite versehen ist, die der Achse des Kultivierungskastens (6) zugewandt ist, wobei der bogenförmige Abschnitt (704) und der bogenförmige Abschnitt (706) und der Stützabschnitt (702), der bogenförmige Abschnitt (704) und der bogenförmige Abschnitt (706) mit einem Verformungshohlraum (705) versehen sind, und der bogenförmige Abschnitt (704) und der bogenförmige

Abschnitt (706) mit einem Teilungsabschnitt (707) auf gegenüberliegenden Oberflächen des bogenförmigen Abschnitts (704) und des bogenförmigen Abschnitts (706) versehen sind.

9.Die Vorrichtung zur Kultivierung von Grünpflanzen für die städtische Landschaftsgestaltung nach Anspruch 3, dadurch gekennzeichnet, dass jede der vier Ecken des Bodens jeder oberen Platte (3) fest mit geneigten Platten (12) verbunden ist und die anderen Enden jeder der vier geneigten Platten (12) fest mit beiden Seiten des Trägers (2) verbunden sind.

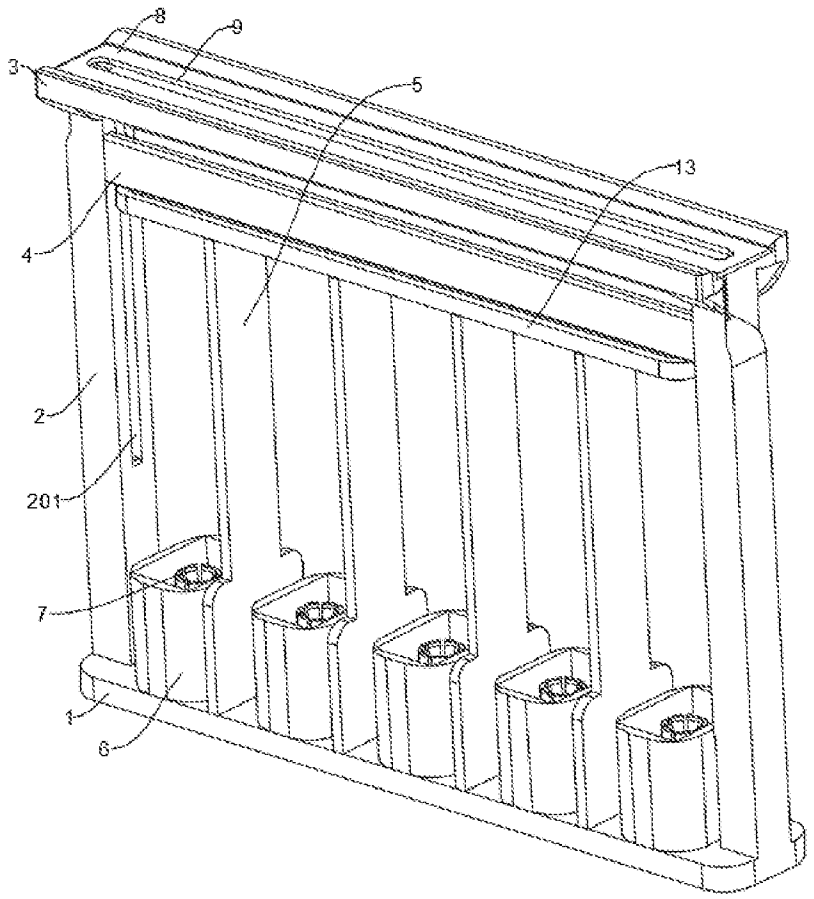

Fig. 1

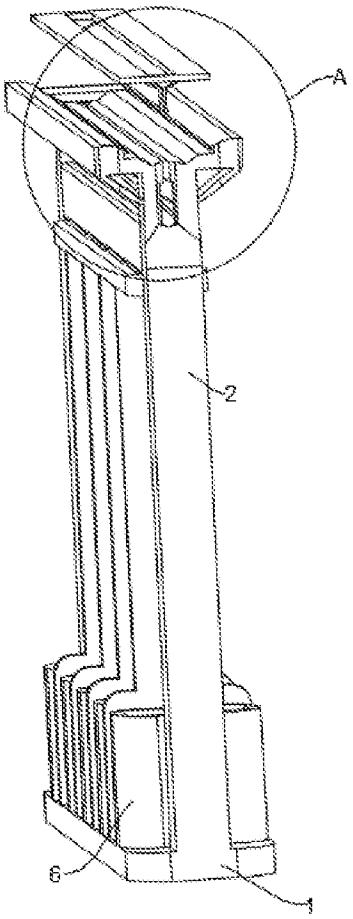

Fig. 2

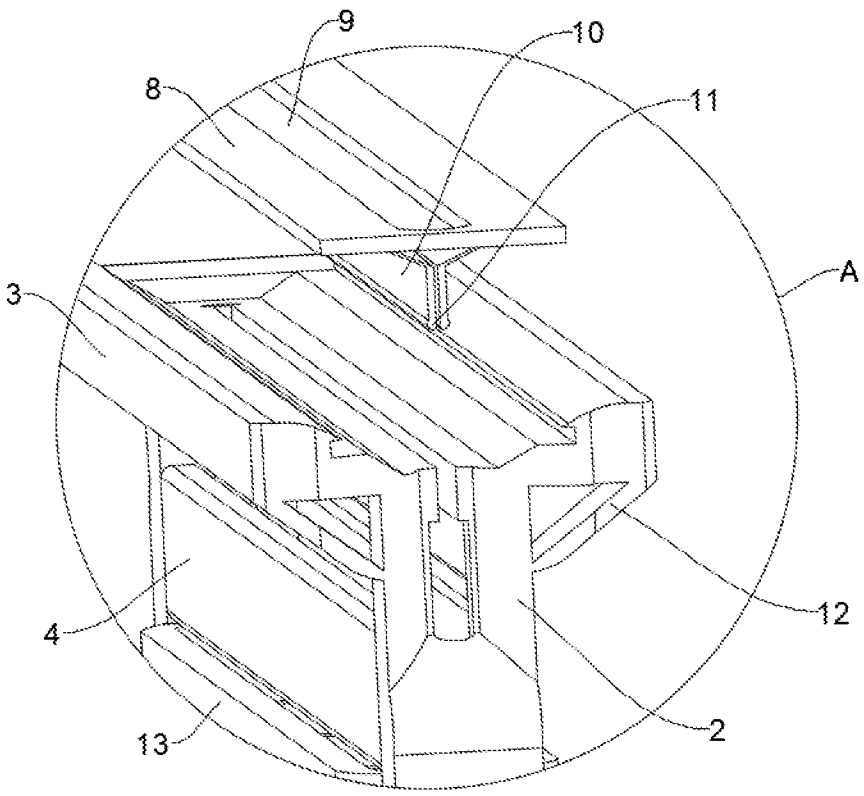

Fig. 3

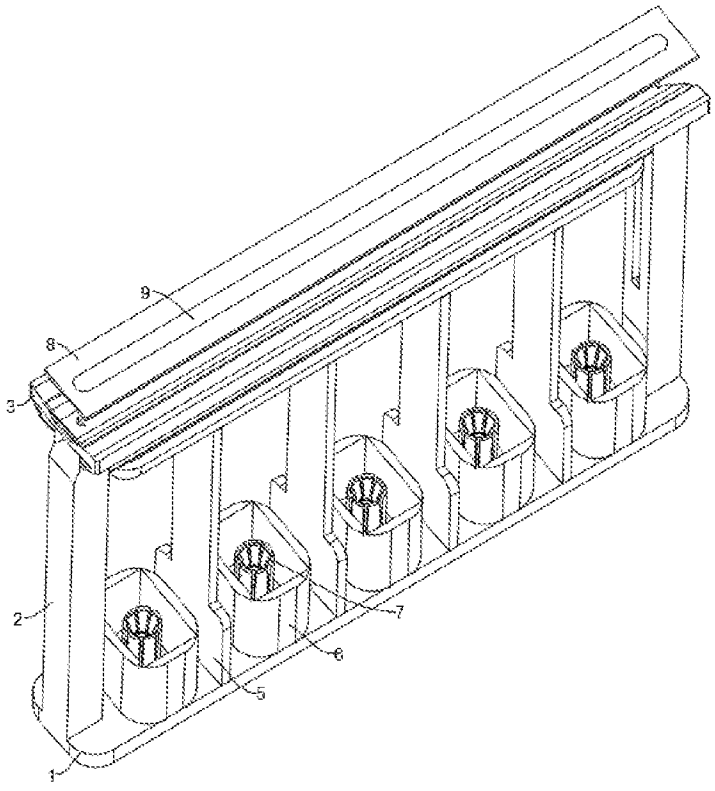

Fig. 4

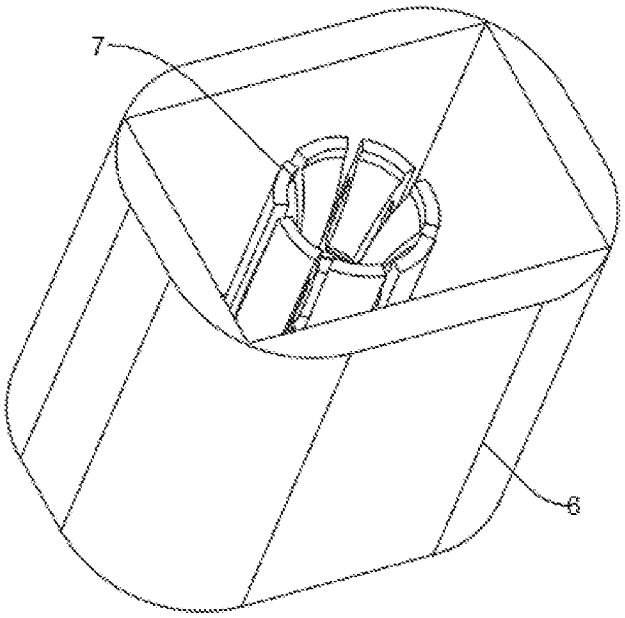

Fig. 5

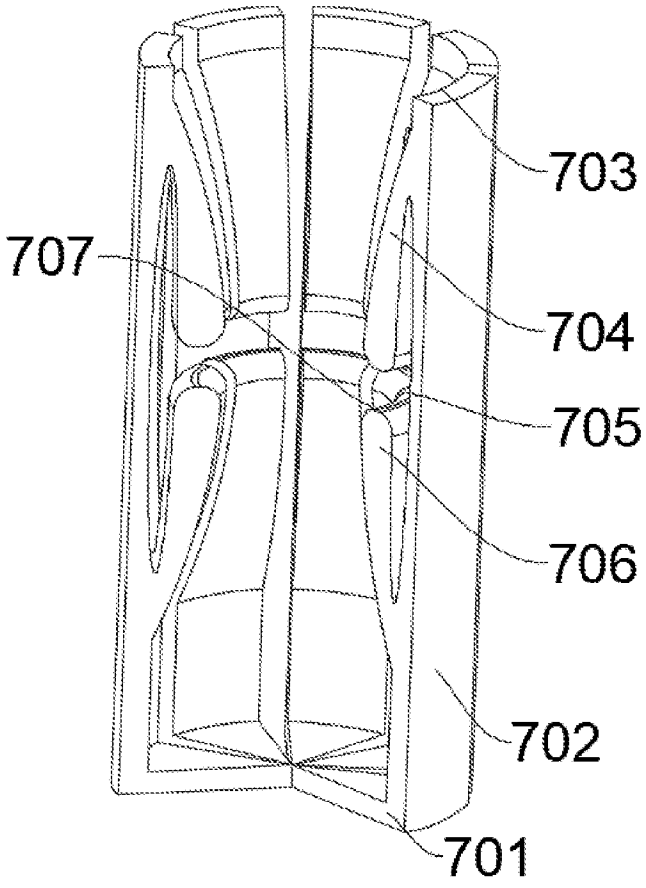

Fig. 6