(12) INTERNATIONAL APPLICATION PUBLISHED UNDER THE PATENT COOPERATION TREATY (PCT)

(19) World Intellectual Property Organization
International Bureau

(43) International Publication Date
4 August 2011 (04.08.2011)

PCT

(10) International Publication Number
WO 2011/092630 A1

(51) International Patent Classification:
E21B 17/02 (2006.01)

(21) International Application Number:
PCT/IB2011/050329

(22) International Filing Date:
25 January 2011 (25.01.2011)

(25) Filing Language: English

(26) Publication Language: English

(30) Priority Data:
12/695,569 28 January 2010 (28.01.2010) US

(71) Applicant *(for all designated States except US)*: **SUNSTONE TECHNOLOGIES, LLC** [US/US]; Suite 800, 101 N Robinson, Oklahoma City, Oklahoma 73102 (US).

(72) Inventors; and

(75) Inventors/Applicants *(for US only)*: **HUGHES, William James** [US/US]; 10783 Towerbridge Lane, Highlands Ranch, Colorado 80130 (US). **LANE, Bryan** [US/US]; 5402 Edith Street, Houston, Texas 77096 (US). **BRIGGS, Gary Marshall** [US/US]; 15199 River Park, Houston, Texas 77070 (US).

(81) Designated States *(unless otherwise indicated, for every kind of national protection available)*: AE, AG, AL, AM, AO, AT, AU, AZ, BA, BB, BG, BH, BR, BW, BY, BZ, CA, CH, CL, CN, CO, CR, CU, CZ, DE, DK, DM, DO, DZ, EC, EE, EG, ES, FI, GB, GD, GE, GH, GM, GT, HN, HR, HU, ID, IL, IN, IS, JP, KE, KG, KM, KN, KP, KR, KZ, LA, LC, LK, LR, LS, LT, LU, LY, MA, MD, ME, MG, MK, MN, MW, MX, MY, MZ, NA, NG, NI, NO, NZ, OM, PE, PG, PH, PL, PT, RO, RS, RU, SC, SD, SE, SG, SK, SL, SM, ST, SV, SY, TH, TJ, TM, TN, TR, TT, TZ, UA, UG, US, UZ, VC, VN, ZA, ZM, ZW.

(84) Designated States *(unless otherwise indicated, for every kind of regional protection available)*: ARIPO (BW, GH, GM, KE, LR, LS, MW, MZ, NA, SD, SL, SZ, TZ, UG, ZM, ZW), Eurasian (AM, AZ, BY, KG, KZ, MD, RU, TJ, TM), European (AL, AT, BE, BG, CH, CY, CZ, DE, DK, EE, ES, FI, FR, GB, GR, HR, HU, IE, IS, IT, LT, LU, LV, MC, MK, MT, NL, NO, PL, PT, RO, RS, SE, SI, SK, SM, TR), OAPI (BF, BJ, CF, CG, CI, CM, GA, GN, GQ, GW, ML, MR, NE, SN, TD, TG).

Declarations under Rule 4.17:

— *of inventorship (Rule 4.17(iv))*

Published:

— *with international search report (Art. 21(3))*

— *before the expiration of the time limit for amending the claims and to be republished in the event of receipt of amendments (Rule 48.2(h))*

(54) **Title**: TAPERED SPLINE CONNECTION FOR DRILL PIPE, CASING AND TUBING

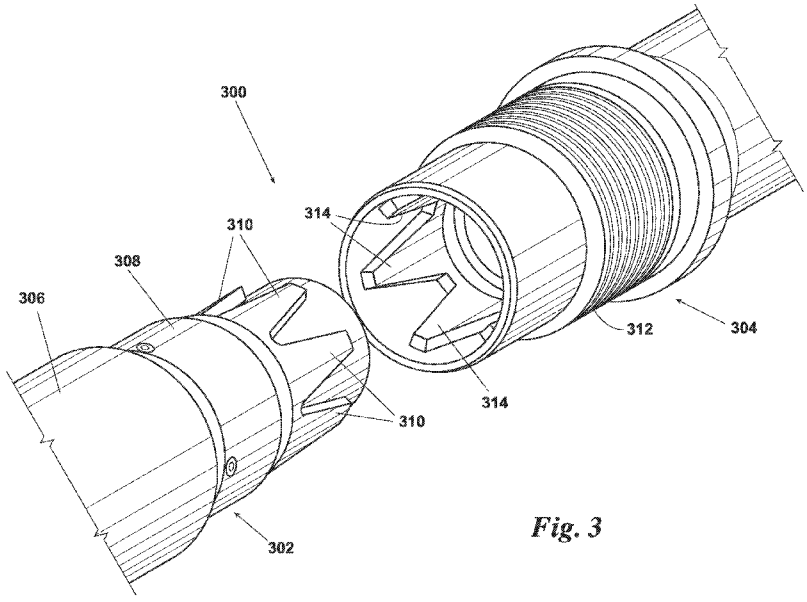

Fig. 3

(57) **Abstract**: An apparatus comprises a first number of splines located near a first end of a first joint section and a second number of splines located near a second end of a second joint section. The first number of splines extends in an axial direction of the first joint section and spans a circumferential surface of the first joint section. Each of the first number of splines has a base, a tip, and a pair of flanks that extends from the base to the tip and forms an acute angle. Each of the first number of splines are configured to be received between adjacent pairs of splines in the second number of splines as the first end of the first joint section and the second end of the second joint section are joined.

WO 2011/092630 A1

TAPERED SPLINE CONNECTION FOR DRILL PIPE, CASING, AND TUBING

FIELD OF THE INVENTION

The present disclosure generally relates to drill pipe, casing, and tubing used to locate and produce hydrocarbons in a subterranean environment and more specifically to a connection for joining sections of one of drill pipe, casing, and tubing together.

BACKGROUND OF THE INVENTION

Large portions of hydrocarbon location and production activities involve drilling, pumping, and conduit installation beneath the surface of the earth. In addition, drilling, pumping and conduit installation operations may include water location and distribution. Drilling, pumping, and conduit installation operations may include sewage processing and distribution. Drilling and conduit installation operations may support installation of electrical power transmission lines and telecommunication industry transmission lines. Drilling, pumping, and conduit installation activities often use lengths of pipes. These pipes may be joined together in a variety of different manners. When pipes are joined, there are several considerations. For example, lengths of pipes often extend over long distances. Replacing broken connections may be difficult and timely. Also, drilling activities may require torque to be transmitted across numerous different pipes. Thus, a joint may need to be strong enough to transmit certain levels of torque and resist failure.

Additionally, certain industry standards regarding the diameters of pipe sections exist today. For example, standards exist about the diameters of the inside of pipes. These standards may maintain expected results for a capacity for flow through a string of joined pipes. Standards also exist about the outer diameter of pipes. These standards may maintain expectancies of certain pipes to fit within certain clearances. Thus, there may be limits on the sizes and thicknesses of materials used in the joint sections of the pipes.

Currently available solutions include threaded connections between pipe sections. The threads may be tightened together to form a connection between pipes. However, these types of connections may not transfer the same amount of torque while rotating both to the left and to the right. The threads may become unthreaded when the pipes are rotated in a certain direction and separate. Additional available solutions may involve adding teeth to the ends of joint sections using threaded connections. These teeth may be capable of transferring torque between sections of pipe even while the pipes are rotated in different directions. However, these connections using teeth may not produce desired results for strength in a pipe section.

Accordingly, a need exists for a method and apparatus, which takes into account one or more of the issues discussed above as well as possibly other issues.

SUMMARY OF THE INVENTION

According to one embodiment of the present invention, an apparatus comprises a first number of splines located near a first end of a first joint section and a second number of splines located near a second end of a second joint section. The first number of splines extends in an axial direction of the first joint section. The first number of splines spans a circumferential surface of the first joint section. Each of the first number of splines has a base, a tip, and a pair of flanks that extend from the base to the tip. The pair of flanks forms an acute angle. The second number of splines extends in an axial direction of the second joint section. The second number of splines spans a circumferential surface of the second joint section. Each of the second number of splines has a base, a tip, and a pair of flanks that extends from the base to the tip. The pair of flanks forms an acute angle. Each of the first number of splines is configured to be received between adjacent pairs of splines in the second number of splines as the first end of the first joint section and the second end of the second joint section are joined together to form a connection between the first joint section and the second joint section.

In another embodiment of the present invention, a method for joining sections of piping together is present. The method comprises forming a first number of splines near a first end of a first joint section, forming a second number of splines near a second end of a second joint section, and joining the first end of the first joint section and the second end of the second joint section together to form a connection. The first number of splines extends in an axial direction of the first joint section. The first number of splines spans a

circumferential surface of the first joint section. Each of the first number of splines has a base, a tip, and a pair of flanks that extends from the base to the tip. The pair of flanks forms an acute angle. The second number of splines extends in an axial direction of the second joint section. The second number of splines spans a circumferential surface of the second joint section. Each of the second number of splines has a base, a tip, and a pair of flanks that extends from the base to the tip. The pair of flanks forms an acute angle. Each of the first number of splines is configured to be received between adjacent pairs of splines in the second number of splines.

In another embodiment of the present invention, an apparatus is present for connecting a number of pipes. The apparatus comprises a first number of splines located near a first end of a first joint section, a second number of splines located near a second end of a second joint section, and a coupling for securing the first joint section and the second joint section together. The first number of splines extends in an axial direction of the first joint section. The first number of splines spans an inner circumferential surface of the first joint section. Each of the first number of splines has a base, a tip, and a pair of flanks that extends from the base to the tip. Each of the first number of splines has a width configured to decrease as the pair of flanks extends from the base to the tip. The second number of splines extends in an axial direction of the second joint section. The second number of splines spans an outer circumferential surface of the second joint section. Each of the second number of splines has a base, a tip, and a pair of flanks that extends from the base to the tip. Each of the first number of splines has a width configured to decrease as the pair of flanks

extends from the base to the tip. Each of the first number of splines is configured to be received between adjacent pairs of splines in the second number of splines as the first end of the first joint section and the second end of the second joint section are joined together to form a connection between the first joint section and the second joint section. The pairs of flanks of each of the first number of splines are configured to be wedged between and seated on flanks of adjacent splines of the second number of splines as the connection is formed. The coupling is configured to wedge the first number of splines between adjacent pairs of splines in the second number of splines to a preconfigured force.

BRIEF DESCRIPTION OF THE DRAWINGS

Figure 1A is an illustration of a hydrocarbon drilling environment in accordance with an illustrative embodiment;

Figure 1B is an illustration of a hydrocarbon production environment in accordance with an illustrative embodiment;

Figure 2 is an illustration of a block diagram of connection in accordance with an illustrative environment;

Figure 3 is an illustration of a connection section for two pipes to be joined together in accordance with an illustrative embodiment;

Figure 4 is an illustration of a detailed view of a joint section on a pipe in accordance with an illustrative embodiment;

Figure 5 is an illustration of a detailed view of a joint section on a pipe in accordance with an illustrative embodiment;

Figure 6 is an illustration of a cross-sectional view of a joint section on an upper pipe in accordance with an illustrative embodiment;

Figure 7 is an illustration of a side cross-sectional view of a pair of joint sections at an initial engagement stage in accordance with an illustrative embodiment;

Figure 8 is an illustration of a side cross-sectional view of a pair of joint sections at an intermediate engagement stage in accordance with an illustrative embodiment;

Figure 9 is an illustration of a side cross-sectional view of a pair of joint sections at a fully engaged stage in accordance with an illustrative embodiment;

Figure 10 is an illustration of an internal cross-sectional view of a pair of joint sections at a fully engaged stage in accordance with an illustrative embodiment;

Figure 11 is an illustration of a cross-sectional center view of a connection section at an engaged stage in accordance with an illustrative embodiment;

Figure 12 is an illustration of a front view of a length of pipe having an orientation in accordance with an illustrative embodiment;

Figure 13 is an illustration of a pair of joint sections having an orientation at an initial engagement stage in accordance with an illustrative embodiment;

Figure 14 is an illustration of a center view of a connection section having a particular orientation in accordance with an illustrative embodiment;

Figure 15 is an illustration of a center view of a connection section having two particular orientations in accordance with an illustrative embodiment;

Figure 16 is an illustration of a male joint section having wiring in accordance with an illustrative embodiment;

Figure 17 is an illustration of a female joint section having wiring in accordance with an illustrative embodiment;

Figure 18 is an illustration of a male joint section having wiring in accordance with an illustrative embodiment; and

Figure 19 is an illustration of a female joint section having wiring in accordance with an illustrative embodiment.

DETAILED DESCRIPTION OF EMBODIMENTS OF THE INVENTION

With reference now to the figures and particularly with reference to **Figure 1A**, an illustration of a hydrocarbon drilling environment is depicted in accordance with an illustrative embodiment. In this illustrative example, hydrocarbon drilling environment **100** includes drilling derrick **102** and borehole **108**. As depicted, derrick **102** includes drill string **114**, casing **116**, and drill bit **118** to form borehole **108**. Drill string **114** may include any number of drill pipes **115** connected end to end using connectors **119**. As used herein, a number of items means one or more items.

With reference now to **Figure 1B**, an illustration of a hydrocarbon production environment is depicted in accordance with an illustrative embodiment. In this illustrative example, hydrocarbon production environment **101** includes pump jack **104**, borehole **111**, as well as storage center **112**. As

depicted, pump jack **104** includes casing **120** as well as tubing **122** to produce hydrocarbons **124**, such as oil and gas for example, from borehole **110**. Any number of different materials may be used in each of drill pipes **115** in **Figure 1A**, casing **120**, as well as tubing **122**. For example, without limitation, drill pipes **115** in **Figure 1A**, casing **120**, as well as tubing **122** may be formed from materials selected from one of steel, stainless steel, nickel, copper, aluminum, titanium, concrete, engineered ceramic, fiber reinforced polymer resins, thermoplastic, thermoset polymer including advanced polymers and blends, and/or any other suitable materials and/or any combination thereof.

The different illustrative embodiments recognize and take into account a number of different considerations. For example, the different illustrative embodiments recognize and take into account that it may be desirable to have pipe connections that will resist failure due to the rotational force, such as torque, for example, exerted upon the pipe connections during drilling. The illustrative embodiments recognize that one solution may involve using a shouldered connection. A shouldered connection may involve pipes having threaded ends. The tightening of the threaded ends together causes one pipe end to shoulder or tighten against the other pipe end. However, the illustrative embodiments recognize that the strength of a shouldered connection is a result of the tightening of one shoulder against another shoulder as a result of tightening the threads. Further, when external forces such as torque are exerted upon such a shouldered connection, the threads may yield under the pressure of the external forces.

As used herein “pipe” or “pipes” is/are cylindrical devices that may or may not have a hollow interior. Additionally, the use of the term “pipe” or “pipes” is intended to include without limitation drill pipe, casing, tubing, production tubing, liners, and/or any other cylindrical device suitable for use in wellbores for the production of hydrocarbons. In addition, the use of the term “pipe” or “pipes” is intended to include, without limitation, cylindrical devices for drilling, pumping, and conduit installation operations in support of water location and distribution, sewage processing and distribution, installation of electrical power transmission lines, and installation of telecommunication industry transmission lines. As used herein, “yield”, when referring to an object, means for the object to physically deform as a result of applied forces.

The different illustrative embodiments also recognize and take into account that it may be desirable to have a drill pipe that will not become separated while rotating both to the right and to the left. The different illustrative embodiments recognize that one solution may involve a connection using teeth at an end of one pipe section. These teeth at the end of the one pipe section may be joined with teeth at the end of another section such that rotational force is transferred between the pipes while rotating in either direction. However, the illustrative embodiments recognize that the strength of such a connection is a result of the teeth joined together. Further, these teeth are unsupported as they extend from the ends of the pipes. As a result, these teeth may yield when torque is exerted upon the teeth in this connection. As used herein, teeth, when referring to cylindrical objects, are objects that extend from one of the circular ends of the cylindrical object.

Thus, the illustrative embodiments provide a tapered spline connection for drill pipe, casing and tubing. As used herein, splines, when referring to cylindrical objects, are raised surfaces located on a portion of the cylindrical object's outer surface. In one embodiment, an apparatus comprises a first number of splines located near a first end of a first joint section and a second number of splines located near a second end of a second joint section. The first number of splines extends in an axial direction of the first joint section. The first number of splines spans a circumferential surface of the first joint section. Each of the first number of splines has a base, a tip, and a pair of flanks that extend from the base to the tip. The pair of flanks forms an acute angle. The second number of splines extends in an axial direction of the second joint section. The second number of splines spans a circumferential surface of the second joint section. Each of the second number of splines has a base, a tip, and a pair of flanks that extends from the base to the tip. The pair of flanks forms an acute angle. Each of the first number of splines is configured to be received between adjacent pairs of splines in the second number of splines as the first end of the first joint section and the second end of the second joint section are joined together to form a connection between the first joint section and the second joint section.

In another embodiment, the pairs of flanks of each of the first number of splines are wedged between and seated on flanks of adjacent splines of the second number of splines as the first end of the first joint section and the second end of the second joint section are joined together. A coupling is

tightened to wedge the first number of splines between adjacent pairs of splines in the second number of splines to a preconfigured force.

In yet another embodiment, tips of each of the first number of splines and each of the second number of splines are configured such that when the connection is formed, a first number of gaps are formed between each tip of the first number of splines and bases of adjacent splines in second number of splines. Additionally, a second number of gaps are formed between each tip of the second number of splines and bases of adjacent splines in first number of splines.

With reference now to **Figure 2**, an illustration of a block diagram of a connection is depicted in accordance with an illustrative environment. In this illustrative example, connection **200** includes first joint section **202** and second joint section **204**. For example, first joint section **202** and/or second joint section may be portions of cylindrical objects, such as for example, without limitation, a drill pipe, tubing, casing, a liner, and/or any other objects suitable for production and/or location of hydrocarbons. Additionally, connection **200** may be implemented in a hydrocarbon drilling environment and/or hydrocarbon production environment, such as hydrocarbon drilling environment **100** in **Figure 1A** and hydrocarbon production environment **101** in **Figure 1B**. Persons skilled in the art recognize and take note that other environments exist in which connection **200** may be implemented. Such other environments may include, for example, drilling, pumping, and conduit installation environments in which drilling, pumping, and conduit installation operations support water location and distribution, sewage processing and distribution, installation of electrical power

transmission lines, and installation of telecommunication industry transmission lines.

As depicted, first joint section **202** includes first number of splines **206** located near first end **208** of first joint section **202**. First number of splines **206** span circumferential surface **210** of first joint section **202**. First number of splines **206** also extend in axial direction **211** of first joint section **202**. Similarly, second joint section **204** includes second number of splines **212** located near second end **214** of second joint section **204**. Second number of splines **212** span circumferential surface **216** of second joint section **204**. Second number of splines **212** also extend in axial direction **217** of second joint section **204**.

As used herein, a circumferential surface, when referring to objects, is a surface of the object that bounds the object in a circular fashion. For example, a circumferential surface may be a surface corresponding to an inner circumference of a cylinder. A circumferential surface may also be a surface corresponding to an outer circumference of a cylinder. Also used herein, an axial direction when referring to cylindrically shaped objects means a direction substantially parallel to the center axis of the cylindrically shaped object.

In this illustrative embodiment, splines in both first joint section **202** and second joint section **204** have a shape defined by base **218**, tip **220**, and pair of flanks **222** that extends from base **218** to tip **220**. Pair of flanks also form acute angle **224**. Each spline in first number of splines **206** is configured to be received between adjacent pairs of splines **226** in second number of splines **212** as first end **208** of first joint section **202** and second end **214** of second joint

section **204** are joined together to form connection **228** between first joint section **202** and second joint section **204**.

The illustration of connection **200** in **Figure 2** is not meant to imply physical or architectural limitations to the manner in which different illustrative embodiments may be implemented. Other components in addition to, and/or in place of, the ones illustrated may be used. Some components may be unnecessary in some illustrative embodiments. Also, the blocks are presented to illustrate some functional components. One or more of these blocks may be combined and/or divided into different blocks when implemented in different illustrative embodiments.

For example, in one illustrative embodiment, first joint section **202** and second joint section **204** may be a tool joint. First joint section **202** and second joint section **204** may be secured to ends of pipes. First joint section **202** and second joint section **204** may also be formed on surfaces of pipes near the end of the pipes. First joint section **202** and second joint section **204** may have different inner diameters and outer diameters. For example, without limitation first joint section **202** and second joint section **204** may be a connection section for pipes having three and a half inch diameters, five inch diameters or any other sizes suitable for use in locating and/or producing hydrocarbons. In other embodiments, splines in first number of splines **206** and second number of splines **212** may be different sizes than each other. Splines in first number of splines **206** and second number of splines **212** may also have different spacing from each other to receive different sizes of splines.

With reference now to **Figure 3**, an illustration of a connection section for two pipes to be joined together is depicted in accordance with an illustrative embodiment. Connection section **300** includes first joint section **302** and second joint section **304**. First joint section **302** includes coupling **306**, load ring **308**, and plurality of splines **310**. Coupling **306** is configured to slide over load ring **308**. First joint section **302** also has threads on an inner surface of coupling **306** which cannot be seen in this particular illustration. Second pipe joint section **304** includes threads **312** and plurality of splines **314**. Threads **312** are configured to receive the threads on the inner surface of coupling **306**. In this example, threads **312** are right hand threads, though left hand threads may be used in alternative embodiments.

In this illustrative embodiment, first joint section **302** and second joint section **304** may be a tool joint secured to the end of a pipe. Additionally, first joint section **302** and second joint section **304** may be a section of the actual pipe near an end of the pipe. First joint section **302** and second joint section **304** may be machined or otherwise formed onto the actual pipe. In this example, first joint section **302** is a male connector while second joint section **304** is a female connector. In another example, first joint section **302** could be the female connector while second joint section **304** is the male connector. In other examples, first joint section **302** could be an upper or lower joint section relative to second joint section **304**.

With reference now to **Figure 4**, an illustration of a detailed view of a joint section on a pipe is depicted in accordance with an illustrative embodiment. In this illustrative example, first joint section **302** and plurality of

splines **310** are depicted with greater detail. Each of plurality of splines **310** have base **402**, tip **404**, and pair of flanks **406**. In this example, each of plurality of splines **310** extend from base **402** in axial direction **408** towards end **410** of first joint section **302**. Each of plurality of splines **310** also extends outwardly in radial direction **412** from outer surface **414** of first joint section **302**. Also as used herein, a "radial direction" or "radial extension," when referring to cylindrically shaped objects means a direction substantially perpendicular to the center axis of the cylindrically shaped object.

Plurality of splines **310** are also tapered, meaning that as plurality of splines extend from base **402** towards tip **404** width **416** of plurality of splines **310** decreases. For example, this decrease in width **416** is attributable to spline flank angle **418**. Spline flank angle **418** is the angle between pair of flanks **406**. Each flank in pair of flanks **406** form flank face angles **419** as each flank extends in radial direction **412** from outer surface **414**. Additionally, the radial extension of plurality of splines **310** from outer surface **414** form recessed areas **420** between each of plurality of splines **310**.

In this illustrative embodiment, plurality of splines **310** also includes root radii **422** as well as chamfers **424**. Root radii **422** are the small edging portions near the interface between plurality of splines **310** and outer surface **414** of first joint section **302**. Chamfers **424** are the rounding off or reduction of edge **426** of plurality of splines **310**.

With reference now to **Figure 5**, an illustration of a detailed view of a joint section on a pipe is depicted in accordance with an illustrative embodiment. In this illustrative example, second joint section **304** and plurality

of splines **314** are depicted with greater detail. The shape of plurality of splines **314** is similar to the shape of plurality of splines **310** in that each of plurality of splines **314** also have base **502**, tip **504**, and pair of flanks **506**. Each of plurality of splines **314** extend from base **502** in an axial direction towards end **508** of second joint section **304**. However, each of plurality of splines **314** extends inwardly in a radial direction from inner surface **510** of second joint section **304**. Like plurality of splines **310**, plurality of splines **314** are tapered and have spline flank angle **512** between pair of flanks **506**. Each flank in pair of flanks **506** form flank face angles **513** as each flank extends in a radial direction from inner surface **510**. Additionally, the radial extension of plurality of splines **314** from inner surface **510** form recessed areas **514** between each of plurality of splines **314**.

In this illustrative embodiment, plurality of splines **312** also includes root radii **516** as well as chamfers **518**. Root radii **516** and chamfers **518** may be another example of root radii **422** as well as chamfers **424** in **Figure 4**. Root radii **516** provide additional support for plurality of splines **314**. Chamfers **518** allow splines of opposing joint sections, such as plurality of splines **310** in **Figure 4** for example, to match with and be received between splines in plurality of splines **314**. Root radii **516** as well as chamfers **518** may also reduce wear and deformation of the edges of the splines, such as edge **426** of plurality of splines **310** in **Figure 4**. Root radii **516** and chamfers **518** may also reduce a tendency for edges of opposing splines to become stuck together during connection and separation stages.

With reference now to **Figure 6**, an illustration of a cross-sectional view of a joint section on an upper pipe is depicted in accordance with an illustrative embodiment. In this illustrative example, upper joint section **600** includes coupling **602**, load ring **604**, set screws **606**, and plurality of splines **610**. Upper joint section **600** is an example of one embodiment of first joint section **302** in **Figure 3**.

In this illustrative embodiment, coupling **602** has set of threads **612** formed in inner surface **614**. Inner surface **614** of coupling **602** has diameter **616** that is substantially equal to outer diameter **618** of load ring **604**. This configuration allows inner surface **614** of coupling **602** to slide in the axial direction around load ring **604**. On the other hand, portion **620** of coupling **602** has inner diameter **622** that is substantially smaller than diameter **616** of inner surface **614**. Inner diameter **622** is also substantially equal to outer diameter **624** of upper joint section **600**. Inner diameter **622** being substantially equal to outer diameter **624** of upper joint section **600** allows coupling **602** to slide around load ring **604** until the point where portion **620** of coupling **602** contacts load ring **604**.

As depicted, load ring **604** has set of inner threads **626** that are matched to threads **628** located on upper joint section **600**. Set of inner threads **626** allow load ring **604** to be rotated onto threads **628** located on upper joint section **600**. Once in place, load ring **604** may be secured to upper joint section **600** and secured using set screws **606**. Any number of set screws **606** may be used to lock load ring **604** in place. In alternative embodiments, load ring **604**

may be formed on upper joint section **600**. Thus, load ring **604** and upper joint section **600** may be the same physical part.

Turning now to **Figure 7**, an illustration of a side cross-sectional view of a pair of joint sections at an initial engagement stage is depicted in accordance with an illustrative embodiment. In this illustrative example, connection section **700** includes upper joint section **702** and lower joint section **704**. Connection section **700** is an example of one embodiment of connection section **300** in **Figure 3**, while upper joint section **702** and lower joint section **704** may be examples of first joint section **302** and second joint section **304** in **Figure 3**, respectively.

As depicted, upper joint section **702** includes plurality of splines **706** on an outer surface. Similarly, lower joint section **704** includes plurality of splines **707** on an inner surface. In this example, outer diameter **708** of upper joint section **702** is less than inner diameter **709** of lower joint section **704**. Outer diameter **708** of upper joint section **702** being less than inner diameter **709** of lower joint section **704** allows end **710** of upper joint section **702** to be placed inside end **712** of lower joint section **704**. Outer diameter **708** of upper joint section **702** being less than inner diameter **709** of lower joint section **704** also allows plurality of splines **706** to be received and positioned in recesses between plurality of splines **707**. Connection section **700** further includes coupling **714**, load ring **716**, and retaining ring **718**.

In this illustrative embodiment, retaining ring **718** restricts coupling **714** from sliding in an axial direction away from lower joint section **704**. Retaining ring **718** is positioned in coupling **714** by engaging threads **720** of

retainer ring **718** with threads **722** of coupling **714** when coupling **714** is slid over load ring **716**. Once engaged, retaining ring **718** then contacts shoulder **724** of load ring **716** to restrict coupling **714** from sliding away from load ring **716** and lower joint section **704**.

With reference now to **Figure 8**, an illustration of a side cross-sectional view of a pair of joint sections at an intermediate engagement stage is depicted in accordance with an illustrative embodiment. In this illustrative example, connection section **700** is depicted with end **710** of upper joint section **702** inserted inside end **712** of lower joint section **704**. Upper joint section **702** and lower joint section **704** have been mated together. As depicted, outer surface **802** of upper joint section **702** and inner surface **804** of lower joint section **704** have diameters of similar size. These diameters of similar size allow outer surface **802** of upper joint section **702** to connect with inner surface **804** of lower joint section **704**. On the other hand, in this example, ends **710** and **712** do not contact surfaces of lower joint section **704** and upper joint section **702**, respectively. Because ends **710** and **712** do not contact surfaces of lower joint section **704** and upper joint section **702**, ends **710** and **712** do not bottom out and gaps **806** exist. Gaps **806** extend in the axial direction between upper joint section **702** and lower joint section **704**.

In this example, connection section **700** also includes seal **808**. Seal **808** is configured to prevent any leakage of fluids from the connection formed between outer surface **802** of upper joint section **702** and inner surface **804** of lower joint section **704**. Additionally, filler may be inserted in gap **806** between end **710** of upper joint section **702** and end **712** of lower joint section

704. The filler may be made from a compressible material, such as, for example, without limitation, polymer or urethane material. For example, the filler may be a polymer ring. Fluids may flow through connection section **700** at certain pressures causing possible wear or erosion of components in connection **700**. Inserting a filler in gap **806** in connection section **700** may reduce an amount of wear or erosion on end **710** of upper joint section **702** and end **712** of lower joint section **704**.

With reference now to **Figure 9**, an illustration of a side cross-sectional view of a pair of joint sections at a fully engaged stage is depicted in accordance with an illustrative embodiment. In this illustrative example, connection section **700** is depicted at a fully engaged stage. Coupling **714** has been shifted in the axial direction around lower joint section **704**. Threads **902** located on an inner surface of coupling **714** have been received by and rotated onto threads **904** located on an outer surface of lower joint section **704**.

In this depicted embodiment, as coupling **714** is shifted axially towards lower joint section **704**, a point is reached where load ring **716** begins to physically resist further axial movement of coupling **714** towards lower joint section **704**. At this point, further tightening of coupling **714** on threads **904** begins to force upper joint section **702** and lower joint section **704** further together. Forcing upper joint section **702** and lower joint section **704** together may reduce the axial distance of gaps **806** between upper joint section **702** and lower joint section **704**. However, in this example, ends **710** and **712** do not bottom out on surfaces of lower joint section **704** and upper joint section **702**.

Thus, gaps **806** extending in the axial direction between surfaces of upper joint section **702** and lower joint section **704** remain.

With reference now to **Figure 10**, an illustration of an internal cross-sectional view of a pair of joint sections at a fully engaged stage is depicted in accordance with an illustrative embodiment. In this illustrative example, connection section **700** at an engaged stage, such as illustrated in **Figure 8** and **Figure 9** for example, is seen from an internal view. This internal view provides greater detail regarding the position of plurality of splines **706** and plurality of splines **707**.

As depicted, each spline of plurality of splines **706** is matched with a recessed area, such as one of recessed areas **512** in **Figure 5**, located between adjacent splines of plurality of splines **707**. Likewise, each spline of plurality of splines **707** is matched with a recessed area, such as one of recessed areas **420** in **Figure 4**, located between adjacent splines of plurality of splines **706**. In this example, the degree of spline flank angle **1002** is substantially equal to the degree of spline flank angle **1004**. Because the degree of spline flank angle **1002** is substantially equal to the degree of spline flank angle **1004**, each flank of the splines of plurality of splines **706** will come in contact with and seat on an opposing flank of a spline in of plurality of splines **707**. Tightening of coupling **714** forces plurality of splines **706** between and towards plurality of splines **707**. In this example, plurality of splines **706** and **707** also do not bottom out on opposing surfaces of upper joint section **702** and lower joint section **704**. Thus, gaps **1005** are formed between tips **1006** of each of plurality of splines **706** and **707** and portions of the flanks of opposing splines. In

this example, gaps **1005** may have a length that ranges from about 3/32 of an inch to about 9/32 of an inch in the axial direction. However, in other examples the length of gaps **1005** may be increased or decreased based upon a tightening and/or gap size considerations.

In this depicted embodiment, tightening of coupling **714** forces plurality of splines **706** between and towards plurality of splines **707**. Preload in the connection caused by tightening of coupling **714** is generated from the mechanical advantage created by the wedge shape of the flanks of each of each of plurality of splines **706** and **707**. As used herein, preload, when referring to a joint connection, refers to the force in a tightened joint connection prior to using the joint connection for its primary function. Preload is a compressive force resulting from two or more surface pairs being forced together during the assembly of a connection. The surfaces in compression can be tightened by any mechanical forces up to the yield strength of the surfaces in contact.

Preload increases the connection stiffness of connection **700** between upper joint section **702** and lower joint section **704**. Connection stiffness is the resistance of a connection section to deflecting when external loads are applied to the pipe string. Preload in a connection allows the connection section between pipe joints to respond to forces as if the connection is a continuous section of pipe, because the connection section does not deflect. In this example, preload is applied to connection section **700** as upper joint section **702** and lower joint section **704** are forced together in the axial direction. Additionally, this preload is applied to surfaces of flanks of opposing splines. As gaps **1005** exist, the splines in connection section **700** have not bottomed out.

Thus, additional tightening of coupling **714** increases an amount of preload in both the axial and circumferential directions for connection section **700**.

In this illustrated embodiment, the angle selected for spline flank angle **1002** and **1004** has a value of about 18 degrees. However, in other advantageous embodiments spline flank angle **1002** and **1004** may be selected from a range between an angle having a value of about 10 degrees and an angle having a value of about 50 degrees. One of ordinary skill in the art would understand that as a spline flank angle approaches 90 degrees the mechanical advantage between opposing splines is reduced. Correspondingly, as a spline flank angle approaches zero degrees, disassembly of the joint sections may become more difficult once forces have been applied to the connection.

The tapered shape of plurality of splines **706** and **707** supplies a number of advantages to connection section **700**. First, the tip of each of the splines is narrower than the base of the spline. The narrower tip fits within the larger recessed areas between the splines at an initial engagement stage, such as depicted in **Figure 7**, for example. At such an initial engagement stage, a clearance exits between the narrower tip of the splines and the larger recessed areas. The clearance allows the splines to intermesh without the need for precise alignment at the initial engagement stage. Second, the area of contact between the flanks of the opposing splines allows torque to be transferred between upper joint section **702** and lower joint section **704**. Transfer of torque between the flanks allows pipes connected by connection section **700** to be rotated either to the right or to the left without becoming disconnected. Further, as plurality of splines **706** are forced between and towards plurality of splines

707, the splines are wedged together. Wedging plurality of splines **706** and plurality of splines **707** together reduces possible radial gaps, such as joint slop for example, that may exist between flanks of opposing splines. Joint slop in a connection section may be any undesired gaps and/or lack of connection between surfaces of opposing joint sections. Wedging plurality of splines **706** and plurality of splines **707** together also forms a strong connection between upper joint section **702** and lower joint section **704**. For example, the connection may be capable of withstanding levels of torque of about 15% or greater than the base pipe and about 70% or greater than connections used in current drilling applications.

Another advantage which may be attributable to the tapered shape of plurality of splines **706** and **707** is a reduction in the demand for machine tolerances. For example, irregularities may exist in one of more of the splines. One of the flanks of a spline may not be completely planar or the spline flank angle for one of the splines may not be formed to the exact degree desired. As the opposing splines are wedged together, the forces exerted on the splines adjacent to the spline having an irregularity may cause the irregular spline to deform. This deformation of the irregularity as the splines are wedged together may reduce problems caused by the irregularities.

The illustration of connection section **700** in **Figure 10** is not meant to imply physical or architectural limitations to the manner in which different illustrative embodiments may be implemented. Other components in addition to, and/or in place of, the ones illustrated may be used. Some components may be unnecessary in some illustrative embodiments. For example, in different

illustrative embodiments any number of splines may be used. In other examples, splines may be any number of different sizes. Further, different illustrative embodiments may include splines having any number of different spline flank angles including angles beyond any previously discussed ranges. Still further, the spline flanks may be curved. For example, the spline flanks may have a slope that may be approximated by a parabolic curve. The spline flank angle may be formed by lines that are tangential to points on each flank in the pair.

With reference now to **Figure 11**, an illustration of a cross-sectional center view of a connection section at an engaged stage is depicted in accordance with an illustrative embodiment. In this illustrative example, connection section **1100** is seen from center view **1102**. Connection section **1100** is an illustration of an example of one embodiment of connection section **700** in **Figure 7**. Connection section **1100** includes male joint section **1104**, female joint section **1106**, coupling **1108**, and retainer ring **1109**. Male joint section **1104** includes plurality of splines **1110**. Female joint section **1106** includes plurality of splines **1112**. As can be seen, substantially no circumferential gaps occur between plurality of splines **1110** and **1112** because connection section **1100** is engaged.

In this illustrative embodiment, external forces applied to connection section **1100** are resisted by the connection stiffness of male joint section **1104** and female joint section **1106**. Additionally, if torque were applied to connection section **1100,** hoop stress and hoop tension would be experienced in connection section **1100**. Hoop stress, in connection section **1100**, is the

resistance in male joint section **1104** that arrests retraction and the resistance in female joint section **1106** that arrests swelling as the two joint sections are compressed and/or rotated against each other. Hoop tension in connection section **1100** is the resisting force in the female joint section **1106** wall that provides support and counteracts the hoop stress in the male joint section **1104**. For example, the thickness of inner wall **1114** of male joint section **1104** provides support for plurality of splines **1110**. Support for plurality of splines **1110** provided by the thickness of inner wall **1114** of male joint section **1104** reduces the tendency for plurality of splines **1110** to retract. Inner wall **1114** also provides an area of support to reduce the exposure of plurality of splines **1110**. The area of support provided by inner wall **1114** increases an amount of applied force that plurality of splines **1110** may withstand. In a similar manner, the thickness of outer wall **1116** of female joint section **1106** provides support for plurality of splines **1112**. Support for plurality of splines **1112** provided by the thickness of outer wall **1116** of female joint section **1106** reduces the tendency for plurality of splines **1112** to expand. Outer wall **1116** also provides an area of support to reduce the exposure of plurality of splines **1112**. The area of support provided by outer wall **1116** increases an amount of applied force that plurality of splines **1112** may withstand.

In addition, inner wall **1114** provides support in the area between the each spline in plurality of splines **1110**. The support provided by inner wall **1114** reduces any tendency for splines of plurality of splines **1110** to shear inwardly. Similarly, outer wall **1116** provides support in the area between each spline in plurality of splines **1112**. The support provided by outer wall **1116**

reduces any tendency for splines of plurality of splines **1112** to shear outwardly. Thus, the cylindrical shape of inner wall **1114** and outer wall **1116** cause axial and torsional forces to be distributed evenly across plurality of splines **1110** and **1112** in connection section **1100**. As torque is applied to one joint section, the torque is transferred to the other joint section through the plurality of splines **1110** and **1112** which are supported by the hoop stiffness caused by the cylindrically adjoined flanks. Thus, the overall torsional strength of the connection section **1100** is increased. As used herein, torsional strength, when referring to a connection section, means the amount of torsional forces the connection may withstand before the components of the connection section yield.

As depicted, both plurality of splines **1110** and **1112** have similar flank face angles **1118**. In this illustrative embodiment, the angle of flank face angle **1118** is approximately 0 degrees. In this example, flank face angles **1118** are determined relative to the axis of the cylinder of connection section **1100**. Flank face angles **1118** are an angle between a first line and a second line. The first line is perpendicular to the axis and intersects the spline flank at a point along the radial midpoint of the flank face. The second line is a line that is tangential to the point along the radial midpoint of the flank face that intersects with the first line. As depicted in **Figure 11** these two lines are substantially the same and thus the angle is approximately 0 degrees.

However, flank face angles **1118** may vary as the cross section of connection **1100** is shifted axially. For example, near the bases of splines in plurality of splines **1110** the flank face angle may be different than the flank face

angle near the bases of splines in plurality of splines **1112**. As depicted, in **Figure 11** flank face angles **1118** are zero degrees. The illustration of connection section **1100** in **Figure 11** may be at an axial midpoint of connection section **1100**. The axial midpoint being the approximate midpoint between the bases of opposing splines in plurality of splines **1110** and **1112**. As a cross-sectional view of connection section **1100** is shifted axially flank face angles **1118** may increase or decrease. Thus, flank face angles **1118** may vary in connection section **1100**. Additionally, the flank face angle at a point on flanks in plurality of splines **1110** may be different than the flank face angle at a point on flanks in plurality of splines **1112**.

Overall, flank face angle **1118** may be selected from a range between an angle having a value of about negative 30 degrees and an angle having a value of about 30 degrees. Additionally, flank face angle **1118** may vary in connection section **1100** from a range between an angle having a value of about negative 30 degrees and an angle having a value of about 30 degrees. Persons skilled in the art recognize and take note that an angle approaching 90 degrees may cause male joint section **1104** and female joint section **1106** to slip rotationally as torque load increases **1100**. Persons skilled in the art recognize and take note that an angle approaching negative 30 degrees may cause the materials of the joint section to yield in response to certain levels of torque or other forces applied to connection section **1100**.

The illustration of connection section **1100** in **Figure 11** is not meant to imply physical or architectural limitations to the manner in which different illustrative embodiments may be implemented. Other components may

be added or substituted for the illustrated components. Some components may be unnecessary in some illustrative embodiments. For example, in different illustrative embodiments any number of splines may be used. In other examples, splines may be any number of different sizes. Further, different illustrative embodiments may include splines having any number of different flank face angles including angles beyond any previously discussed ranges. Moreover, different illustrative embodiments may combine splines with different flank face angles. Still further, the faces of flanks of splines in plurality of splines **1110** and **1112** may be curved.

With reference now to **Figure 12**, an illustration of a front view of a length of pipe having an orientation is depicted in accordance with an illustrative embodiment. In this illustrative example, pipe **1200** has first joint section **1202** at first end **1204** and second joint section **1206** at second end **1208**. In this example, first joint section **1202** may be a male joint section, such as first joint section **302** in **Figure 3**, and second joint section **1204** may be a female joint section, such as second joint section **304** in **Figure 3**. Abbreviations **1210** are provided for illustrative purposes. Abbreviations **1210** allow greater detail of first joint section **1202** and second joint section **1206** to be seen on pipe **1200**. Accordingly, pipe **1200** may not be illustrated to scale and may be longer than depicted.

In this illustrative embodiment, first joint section **1202** has plurality of splines **1212**, while second joint section **1204** has plurality of splines **1214**. Plurality of splines **1214** includes at least one spline, spline **1216**, that is a different size than other splines in plurality of splines **1214**. On the other end of

pipe **1200**, recessed area **1218** between splines in plurality of splines **1212** is larger than other recessed areas between splines in plurality of splines **1212**. As depicted, both spline **1216** and recessed area **1218** are substantially centered on scribe line **1220**. Scribe line **1220** is a reference line that extends from first end **1204** to second end **1208** on pipe **1200**. In this example, centering both spline **1216** and recessed area **1218** along scribe line **1220** provides a particular orientation for pipe **1200**.

In this illustrated embodiment, spline **1216** is larger than other splines in plurality of splines **1214**. However, in other embodiments, splines **1216** may be smaller than other splines in plurality of splines **1214**. In another example, splines **1216** may be tapered at a different angle than other splines in plurality of splines **1214**. Still further, the different spline may be a part of one first joint section **1202** and any number of different sized splines may be used.

With reference now to **Figure 13**, an illustration of a pair of joint sections having an orientation at an initial engagement stage is depicted in accordance with an illustrative embodiment. In this illustrative example, connection section **1300** is shown at an initial engagement stage similar to connection section **700** in **Figure 7**, for example. In this example, connection section **1300** uses pipes that maintain a particular orientation, such as pipe **1200** in **Figure 12**. Connection section **1300** includes upper joint section **1302** and lower joint section **1304**. Upper joint section **1302** includes recessed area **1306** similar to recessed area **1218** in **Figure 12**. Lower joint section **1304** includes spline **1308** similar to spline **1216** in **Figure 12**.

Connection section **1300** is configured such that spline **1308** may only be fit into and be received by recessed area **1306** when upper joint section **1302** and lower joint section **1304** are fully engaged. Configuring connection section **1300** such that spline **1308** may only be fit into and be received by recessed area **1306** when upper joint section **1302** and lower joint section **1304** are fully engaged allows connection section **1300** to maintain a particular orientation as illustrated by scribe line **1310**. Further, maintaining this particular orientation of connection section **1300** may allow an entire string of drill pipe to maintain a selected and particular orientation. Additional methods and apparatuses for maintaining orientation of pipes are disclosed in U.S. Pat. No. 5,950,744 entitled "Method and Apparatus for Aligning Drill Pipe and Tubing".

With reference now to **Figure 14**, an illustration of a center view of a connection section having a particular orientation is depicted in accordance with an illustrative embodiment. In this depicted example, connection section **1300** is seen at a fully engaged stage. As illustrated, spline **1308** fits within and is received by recessed area **1306**. Spline **1308** is larger than other splines and, thus, a particular orientation may be selected and maintained.

With reference now to **Figure 15**, an illustration of a center view of a connection section having two particular orientations is depicted in accordance with an illustrative embodiment. In this depicted example, connection section **1500** is similar to connection section **1300** in **Figure 13**. However, spline **1502** and spline **1504** are similar in size. Spline **1502** and spline **1504** may be received by either of recessed area **1506** or recessed area **1508**. Thus, two particular orientations of connection section **1500** may be selected and

maintained. In other embodiments, any number of orientations may be achieved.

With reference now to **Figure 16**, an illustration of a male joint section having wiring is depicted in accordance with an illustrative embodiment. In this illustrative example, male joint section **1600** includes electrical wires **1602** and plurality of splines **1604**. Male joint section **1600** may be an example of one embodiment of first joint section **302** in **Figure 4** including electrical wiring. As depicted, electrical wires **1602** are positioned between bases of adjacent splines in plurality of splines **1604**.

With reference now to **Figure 17**, an illustration of a female joint section having wiring is depicted in accordance with an illustrative embodiment. In this illustrative example, female joint section **1700** includes electrical contacts **1702** and plurality of splines **1704**. Female joint section **1700** may be an example of one embodiment of second joint section **304** in **Figure 5** including electrical contacts. As depicted, electrical contacts **1702** are positioned at the tips of splines in plurality of splines **1704**. Female joint section **1700** may be joined with a male joint section, such as male joint section **1600** in **Figure 16**, such as described in **Figures 7-9** above, for example. In this embodiment, electrical contacts **1702** are configured to receive electrical wires, such as electrical wires **1602** in **Figure 16**, as female joint section **1700** is joined with male joint section **1600** in **Figure 16**. Thus, electrical wiring may be maintained through a connection of two pipes and/or as entire string of connected pipes. Additional methods and systems for including wiring in pipes are disclosed in

United States Patent 7,226,090 B2 entitled "Rod and Tubing Joint of Multiple Orientations Containing Electrical Wiring".

The illustrations of electrical wiring and electrical connections **Figures 16-17** are not meant to imply physical or architectural limitations to the manner in which different illustrative embodiments may be implemented. Other components in addition to, and/or in place of, the ones illustrated may be used. Some components may be unnecessary in some illustrative embodiments. For example, in different illustrative embodiments any number of electrical wiring and electrical contacts may be used. Electrical wiring and/or electrical contacts may be inserted into any different configuration of male and/or female splines. Additionally, electrical wiring and contacts may be inserted into the walls of the pipes themselves.

With reference now to **Figure 18**, an illustration of a male joint section having wiring is depicted in accordance with an illustrative embodiment. In this illustrative example, male joint section **1800** includes spline **1802** and plurality of tapered splines **1804**. Male joint section **1800** may be another example of an embodiment of first joint section **302** in **Figure 4** including a spline for electrical connections. Spline **1802** has flanks **1806** that are substantially parallel. Spline **1802** further includes electrical contact **1808** located at the tip of spline **1802**. In this example, spline **1802** and electrical contact are substantially centered on scribe line **1810**. Scribe line **1810** may be used to maintain a particular orientation for pipe connections such as described with respect to **Figures 12-15** above, for example.

With reference now to **Figure 19**, an illustration of a female joint section having wiring is depicted in accordance with an illustrative embodiment. In this illustrative example, female joint section **1900** includes recessed area **1902**, located inside of orientation spline **1903**, and plurality of tapered splines **1904**, which includes orientation spline **1903**. Female joint section **1900** may be another example of an embodiment of second joint section **304** in **Figure 5** including a recessed area for electrical connections. Recessed area **1902** has sides **1906** that are substantially parallel. Recessed area **1902** further includes electrical wire **1908** extending from the base of recessed area **1902**.

Female joint section **1900** may be joined with a male joint section, such as male joint section **1800** in **Figure 18**. These sections may be joined as described in **Figures 7-9** above, for example. Recessed area **1902** is adapted to receive spline **1802** in **Figure 18** as female joint section **1900** is joined with male joint section **1800** in **Figure 18**. A substantially parallel configuration of recessed area **1902** and spline **1802** in **Figure 18** allows for electrical wire **1908** to be guided into electrical contacts **1808** in **Figure 18**. Guiding of electrical wire **1908** by the substantially parallel configuration may allow for a connection between electrical contacts **1808** in **Figure 18** and **1908** without a need to manually align electrical connectors **1808** in **Figure 18** and **1908** themselves as male joint section **1800** in **Figure 18** and female joint section **1900** are joined together.

While spline **1802** in **Figure 18** and recessed area **1902** may aid in the connection of electrical wiring, spline **1802** in **Figure 18** may not be tapered similar to plurality of tapered splines **1804** in **Figure 18**. Thus, spline **1802** in

Figure 18 and recessed area **1902** may not provide the same advantages of torque transmission described above with respect to **Figure 11**. However, positioning recessed area **1902** inside orientation spline **1903** reduces any negative impact using non-tapered splines for electrical connections may have.

The illustrations of electrical connections and splines having substantially parallel sides in **Figures 18-19** are not meant to imply physical or architectural limitations to the manner in which different illustrative embodiments may be implemented. Other components in addition to, and/or in place of, the ones illustrated may be used. Some components may be unnecessary in some illustrative embodiments. For example, in different illustrative embodiments any number of electrical wiring and electrical contacts may be used. Electrical wiring and/or electrical contacts may be inserted into any different configuration of male and/or female splines. Additionally, any number of splines having substantially parallel flanks may be located in or between any number of different splines.

In an embodiment, an apparatus for connecting a number of pipes, comprises a first number of splines located near a first end of a first joint section, a second number of splines located near a second end of a second joint section, and a coupling for securing the first joint section and the second joint section together.

The first number of splines extend in an axial direction of the first joint section, and span an inner circumferential surface of the first joint section. Each of the first number of splines has a base, a tip, and a pair of flanks extending from the base to the tip. Each of the first number of splines further

has a width configured to decrease as the pair of flanks extends from the base to the tip.

The second number of splines extend in an axial direction of the second joint section, and span an outer circumferential surface of the second joint section. Each of the second number of splines has a base, a tip, and a pair of flanks extending from the base to the tip. Each of the second number of splines further has a width configured to decrease as the pair of flanks extends from the base to the tip.

Each of the first number of splines is configured to be received between adjacent pairs of splines in the second number of splines as the first end of the first joint section and the second end of the second joint section are joined together to form a connection between the first joint section and the second joint section.

Further, the pairs of flanks of each of the first number of splines are configured to be wedged between and seated on flanks of adjacent splines of the second number of splines as the connection is formed and wherein the coupling is configured to wedge the first number of splines between adjacent pairs of splines in the second number of splines to a preconfigured force.

A first number of gaps are formed between each tip of the first number of splines and bases of adjacent splines in second number of splines, and a second number of gaps are formed between each tip of the second number of splines and bases of adjacent splines in first number of splines. The first number of gaps and the second number of gaps have a length that has a

value ranging between about 3/32 of an inch to about 9/32 of an inch in the axial direction once the connection has been formed.

In an embodiment, the first joint section can be connected to an end of at least one of a rod, a drill pipe, a casing, a tubing, and a liner and wherein the second joint section is connected to an end of at least one of a rod, a drill pipe, a casing, a tubing, and a liner.

In another embodiment, the first joint section is formed into an end of at least one of a rod, a drill pipe, a casing, a tubing, and a liner and wherein the second joint section is formed into an end of at least one of a rod, a drill pipe, a casing, a tubing, and a liner.

The first joint section and the second joint section can comprise materials selected from at least one of steel, stainless steel, nickel, copper, aluminum, titanium, concrete, engineered ceramic, fiber reinforced polymer resin, thermoplastic, thermoset polymer, advanced polymer, and advanced polymer blends.

What is claimed is:

1. An apparatus comprising:

a first number of splines located near a first end of a first joint section, the first number of splines extending in an axial direction of the first joint section, the first number of splines spanning a circumferential surface of the first joint section, each of the first number of splines having a base, a tip, and a pair of flanks extending from the base to the tip wherein the pair of flanks forms an acute angle;

a second number of splines located near a second end of a second joint section, the second number of splines extending in an axial direction of the second joint section, the second number of splines spanning a circumferential surface of the second joint section, each of the second number of splines having a base, a tip, and a pair of flanks extending from the base to the tip wherein the pair of flanks forms an acute angle; and

wherein each of the first number of splines is configured to be received between adjacent pairs of splines in the second number of splines as the first end of the first joint section and the second end of the second joint section are joined together to form a connection between the first joint section and the second joint section.

2. The apparatus of claim 1 further comprising:

a coupling for securing the first joint section and the second joint section together, the coupling having a first inner diameter substantially equal to an outer diameter of the first joint section, the coupling having a second inner diameter substantially equal to an outer diameter of the second joint section, and the coupling including a first set of threads on an inner surface of the coupling having the second diameter, wherein the second diameter is larger than the first diameter;

the second joint section including a second set of threads on an outer surface of the second joint section, the second set of threads configured to receive the first set of threads for connecting the coupling to the second joint section; and

a ring connected to an outer surface of the first joint section, the ring having an outer diameter substantially equal to the second diameter, wherein the ring is configured to prevent the coupling from sliding off the first joint section as the first joint section and the second joint section are joined.

3. The apparatus of claim 2, wherein the pairs of flanks of each of the first number of splines are wedged between and seated on flanks of adjacent splines of the second number of splines as the first end of the first joint section and the second end of the second joint section are joined together and wherein the coupling is tightened to wedge the first number of splines between the adjacent pairs of splines in the second number of splines to a preconfigured force.

4. The apparatus of claim 1, 2, or 3, wherein the tips of each of the first number of splines and each of the second number of splines are configured, such that, when the connection is formed, a first number of gaps are formed between each tip of the first number of splines and bases of adjacent splines in second number of splines, and a second number of gaps are formed between each tip of the second number of splines and bases of adjacent splines in first number of splines.

5. The apparatus of any one of claims 1 to 4, wherein the circumferential surface of the first joint section that the first number of splines span is an outer circumferential surface, such that the first joint section is a male joint section and wherein the circumferential surface of the second joint section that the second number of splines span is an inner circumferential surface, such that the second joint section is a female joint section, and wherein each of the first number of splines and each of the second number of splines has a size that is substantially similar, so that the first joint section and the second joint section may be connected in a number of different orientations.

6. The apparatus of any one of claims 1 to 5 further comprising:

an orientation spline of the second number of splines having a size that is substantially different from other splines in the second number of splines wherein the size of the orientation spline is one of a wider size from other splines in the second number of splines; and

a recessed area on the first joint section near the first end, the recessed area positioned between the adjacent pair of splines of the second number of splines, the recessed area adapted to receive the orientation spline, wherein the orientation spline and the recessed area maintain a particular orientation for the connection between the first joint section and the second joint section.

7. The apparatus of claim 6, wherein the orientation spline is a first orientation spline and the recessed area is a first recessed area further comprising:

an additional orientation spline of the second number of splines having a size that is substantially different from other splines in the second number of splines; and

an additional recessed area on the first joint section near the first end, the additional recessed area positioned between a pair of splines of the second number of splines, the additional recessed area adapted to receive the orientation spline, wherein the additional orientation spline and the additional

recessed area maintain a particular orientation for the connection between the first joint section and the second joint section.

8. The apparatus of any one of claims 1 to 7, further comprising:

a first number of electrical connectors positioned between bases of splines of the first number of splines; and

a second number of electrical connectors positioned on tips of splines of the second number of splines, wherein the second number of electrical connectors are adapted to connect to the first number of electrical connectors when the first joint section and the second joint section are joined together.

9. The apparatus of claim 1 further comprising:

an additional spline located near the first end, the additional spline extending in the axial direction of the first joint section towards the first end, the additional spline having a tip and pair of flanks, the pair of flanks being substantially parallel with each other;

a first number of electrical connectors positioned on the tip of the additional spline;

a recessed area located within a spline of the second number of splines, the recessed area having a pair of sides and a base, the pair of sides extending in the axial direction of the second joint section, the pair of sides being substantially parallel to each other, wherein the recessed area is adapted to

receive the additional spline when the first joint section and the second joint section are joined together; and

a second number of electrical connectors positioned on the base of the recessed area, wherein the second number of electrical connectors are adapted to connect to the first number of electrical connectors when the first joint section and the second joint section are joined together.

10. The apparatus of any one of claims 1 to 9, wherein the acute angle formed by the pair of flanks of the first number of splines and the acute angle formed by the pair of flanks of the second number of splines each have a value selected from a range of values between about 10 degrees and about 50 degrees.

11. The apparatus of any one of claims 1 to 10, wherein the first joint section and the second joint section are cylindrically shaped objects having a center axis, wherein each flank in the pair of flanks in the first number of splines and in the second number of splines have a face, wherein the face of the flank forms a flank face angle, wherein the flank face angle is an angle relative to a first line that extends from the center axis through a radial midpoint of the flank face and a second line that is tangential to the radial midpoint of the flank face, and wherein the flank face angle has a number of values selected from a range of values between about positive 30 degrees and negative 30 degrees.

12. A method for joining sections of piping together, the method comprising:

forming a first number of splines near a first end of a first joint section, the first number of splines extending in an axial direction of the first joint section, the first number of splines spanning a circumferential surface of the first joint section, each of the first number of splines having a base, a tip, and a pair of flanks extending from the base to the tip wherein the pair of flanks forms an acute angle;

forming a second number of splines near a second end of a second joint section, the second number of splines extending in an axial direction of the second joint section, the second number of splines spanning a circumferential surface of the second joint section, each of the second number of splines having a base, a tip, and a pair of flanks extending from the base to the tip wherein the pair of flanks forms an acute angle; and

joining the first end of the first joint section and the second end of the second joint section together to form a connection, wherein each of the first number of splines is configured to be received between adjacent pairs of splines in the second number of splines.

13. The method of claim 12 further comprising:

placing a coupling around the first joint section, wherein the coupling has a first inner diameter substantially equal to an outer diameter of the first joint section, wherein the coupling has a second inner diameter substantially equal to an outer diameter of the second joint section, wherein the coupling has a first set of threads on an inner surface of the coupling having the second diameter, wherein the second diameter is larger than the first diameter, wherein the second joint section has a second set of threads on an outer surface of the second joint section;

placing a ring around an outer surface of the first joint section, wherein the ring has an outer diameter substantially equal to the second diameter,

aligning the first set of threads on the inner surface of the coupling with the second set of threads on the outer surface of the second joint section;

turning the coupling in a direction of the threads to connect the coupling with the second joint section; and

tightening the connection of the coupling with the second joint section to secure the first joint section and second joint section together, wherein the ring is configured to prevent the coupling from sliding off the first joint section once the first joint section and the second joint section are joined.

14. The method of claim 13, wherein the step of tightening the connection of the coupling with the second joint section to secure the first joint section and second joint section together further comprises:

wedging the pairs of flanks of each of the first number of splines between flanks of adjacent splines of the second number of splines as the first end of the first joint section and the second end of the second joint section are joined together; and

tightening the coupling to wedge the first number of splines between adjacent pairs of splines in the second number of splines to a preconfigured force.

15. The method of claim 12, 13, or 14, wherein the tips of each of the first number of splines and each of the second number of splines are configured, such that, when the connection is formed a first number of gaps are formed between each tip of the first number of splines and bases of adjacent splines in the second number of splines, and a second number of gaps are formed between each tip of the second number of splines and bases of adjacent splines in the first number of splines.

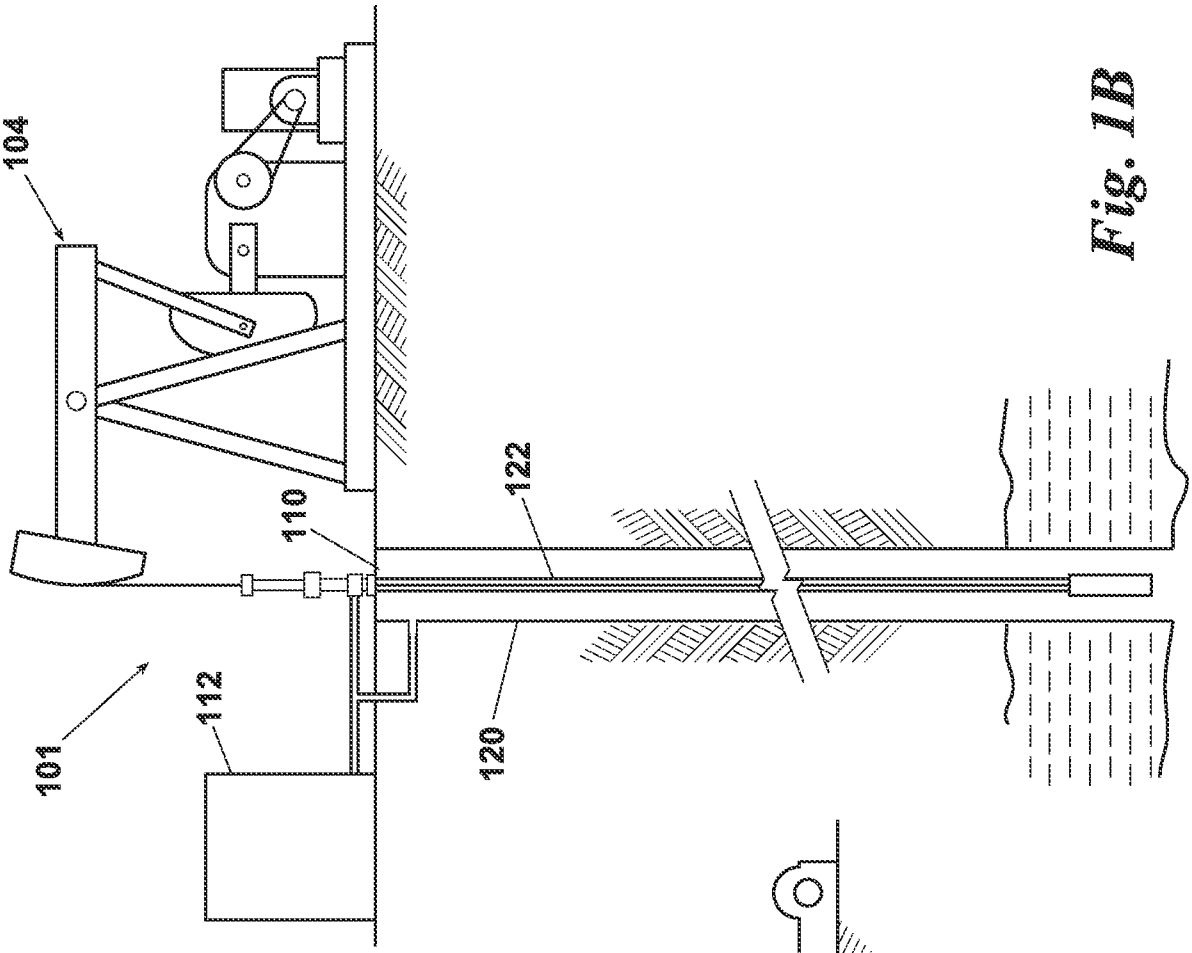

Fig. 1B

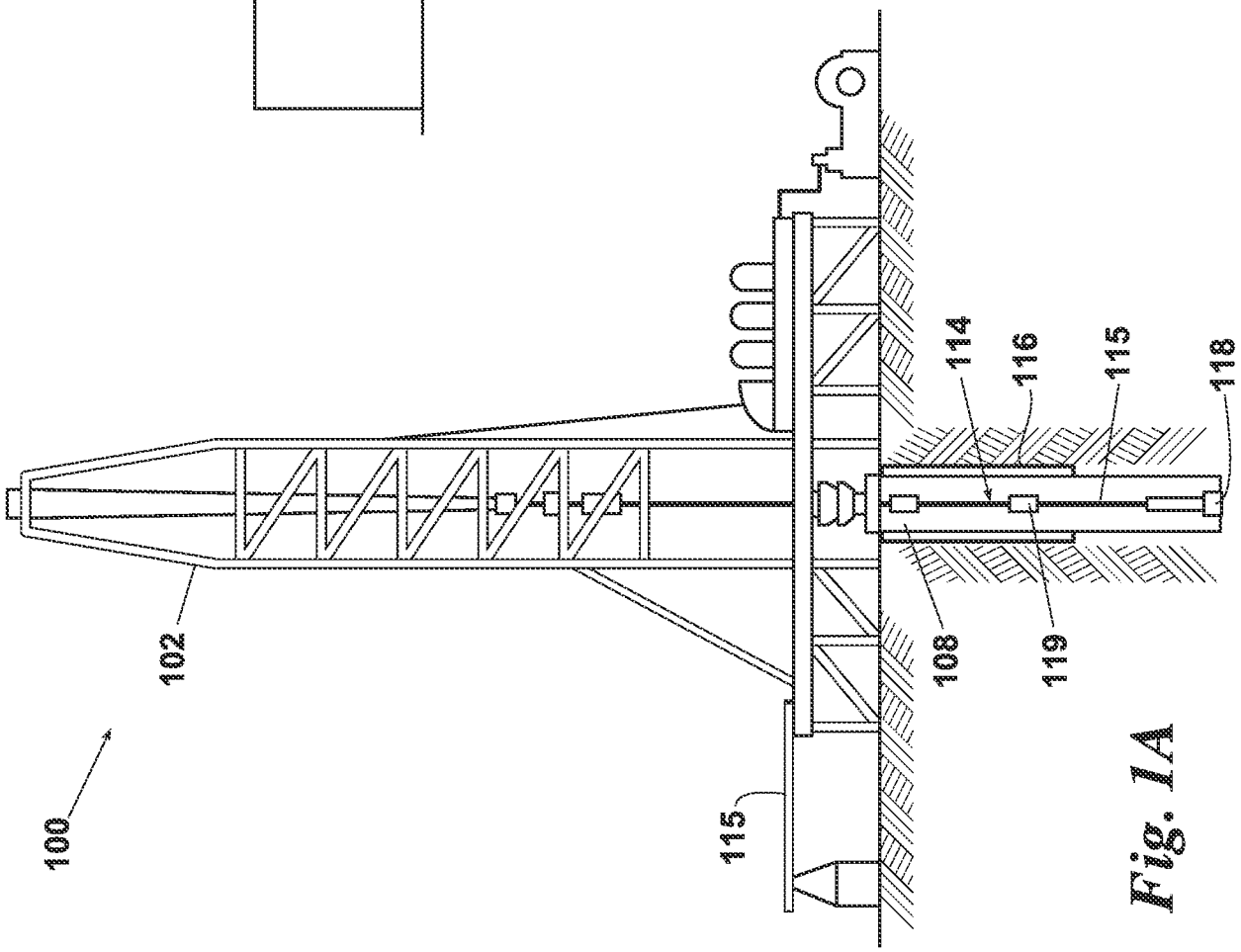

Fig. 1A

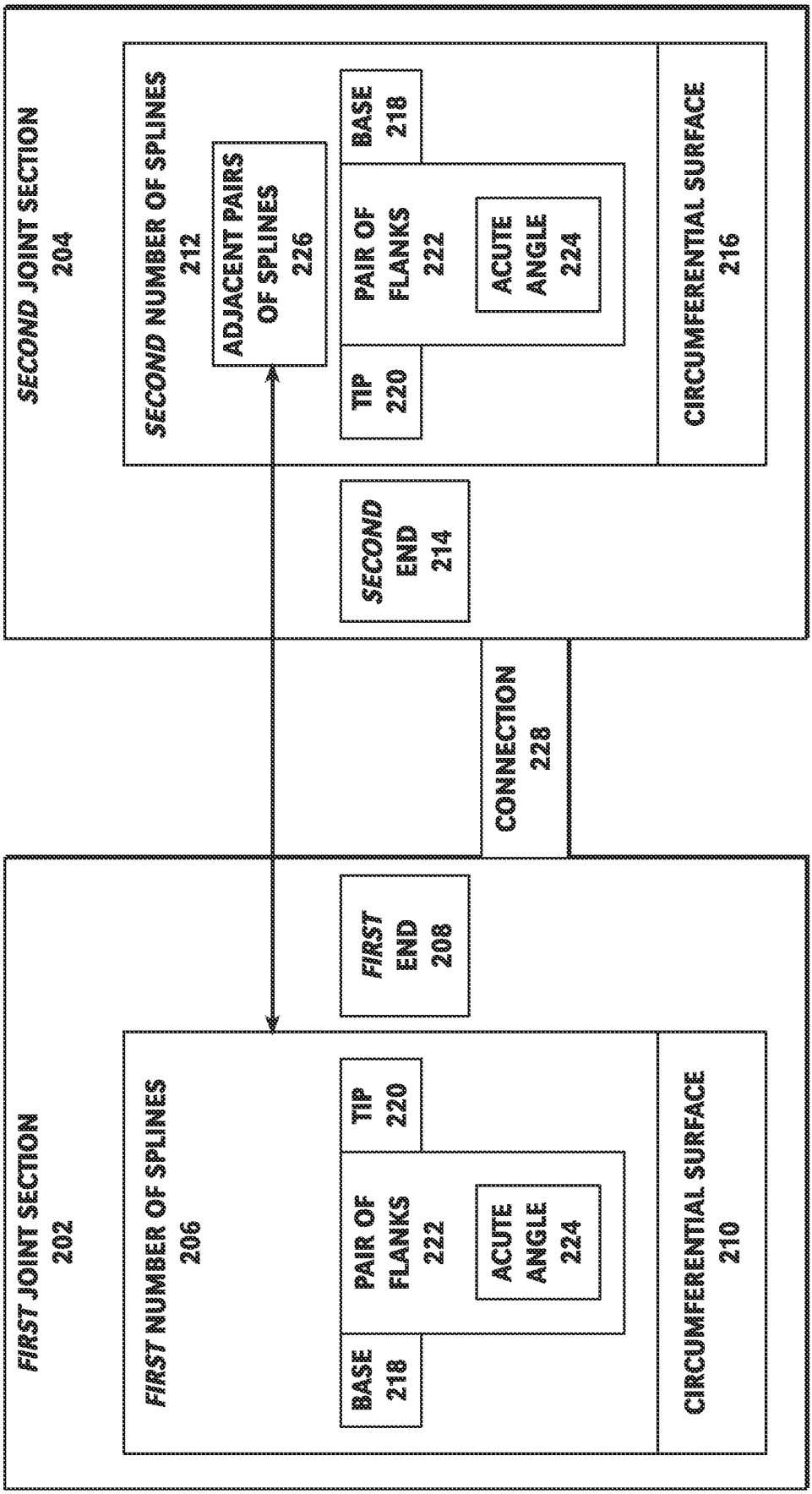
SECOND JOINT SECTION 204
SECOND NUMBER OF SPLINES 212
ADJACENT PAIRS OF SPLINES 226
BASE 218
PAIR OF FLANKS 222
ACUTE ANGLE 224
TIP 220
CIRCUMFERENTIAL SURFACE 216
AXIAL DIRECTION 217
SECOND END 214
CONNECTION 228
FIRST END 208
FIRST JOINT SECTION 202
FIRST NUMBER OF SPLINES 206
TIP 220
PAIR OF FLANKS 222
ACUTE ANGLE 224
BASE 218
CIRCUMFERENTIAL SURFACE 210
AXIAL DIRECTION 211
200

Fig. 2

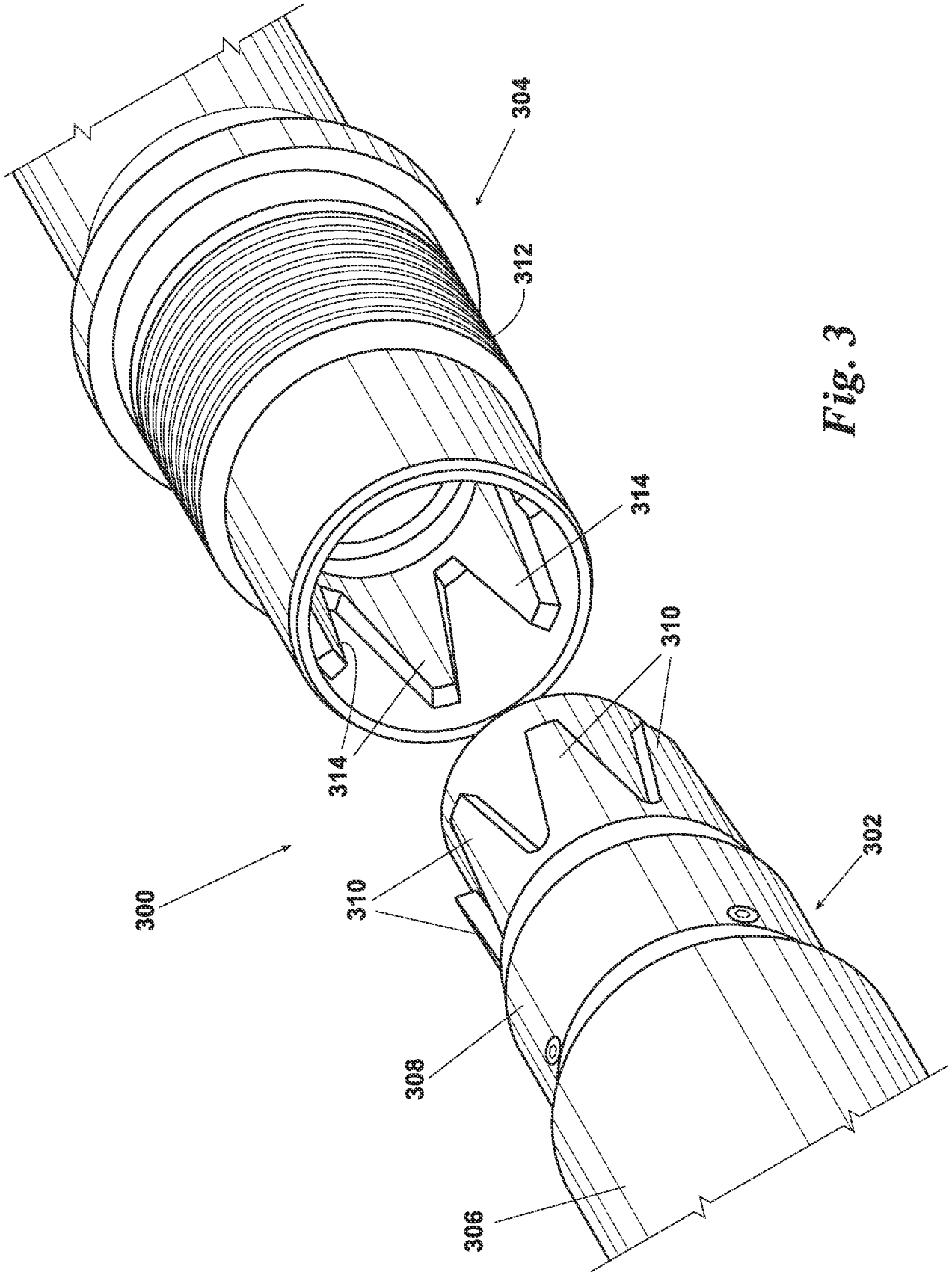

Fig. 3

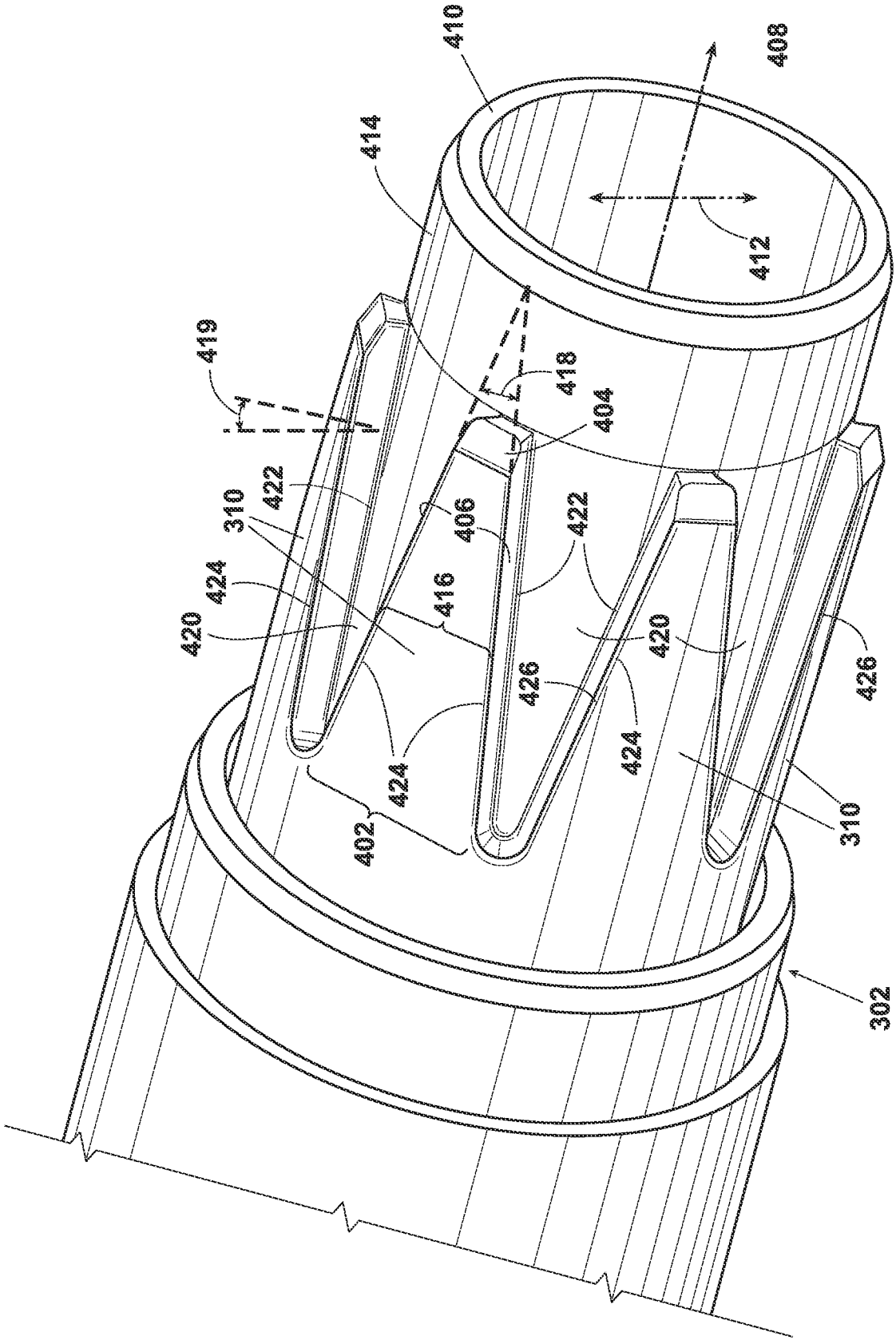
410
408
414
412
419
418
404
422
310
406
422
424
416
420
420
426
426
424
424
310
402
302

Fig. 4

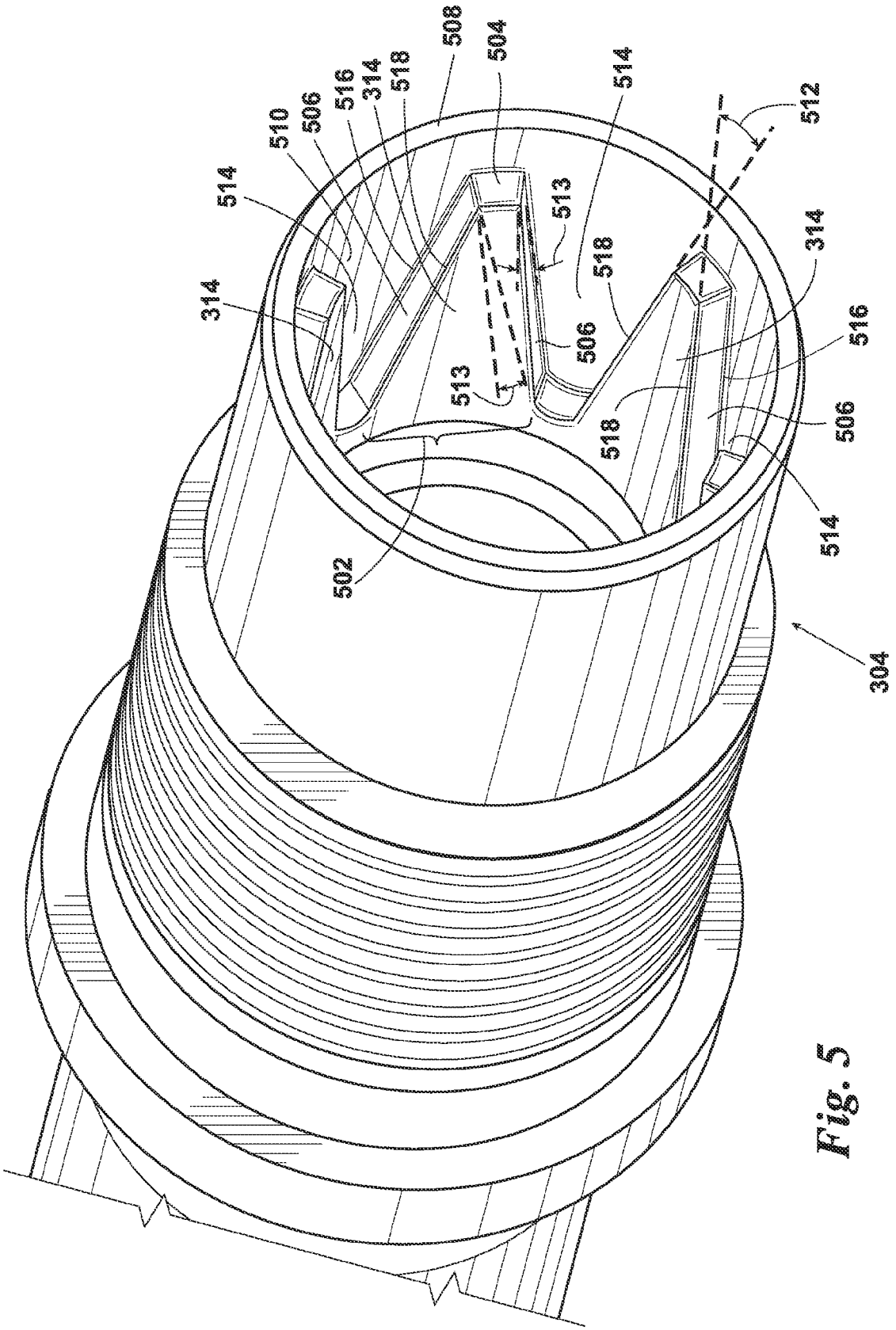
508
504
514
512
510
506
516
314
518
514
513
518
314
314
506
516
513
518
506
514
502
304

Fig. 5

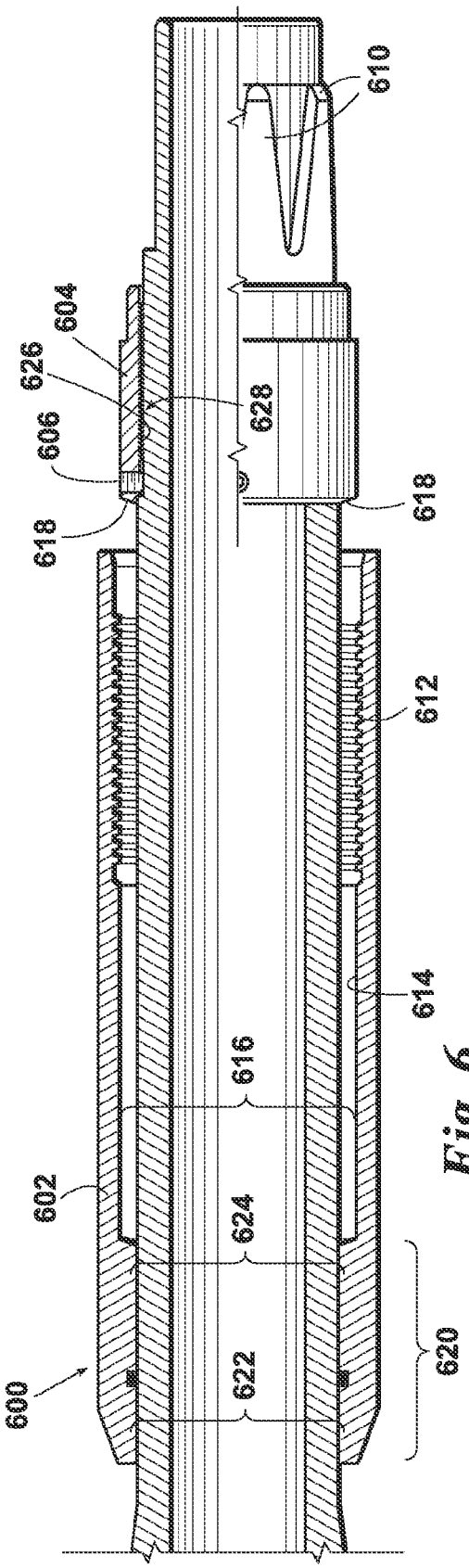
610
604
626
628
606
618
618
612
614
616
602
624
620
622
600

Fig. 6

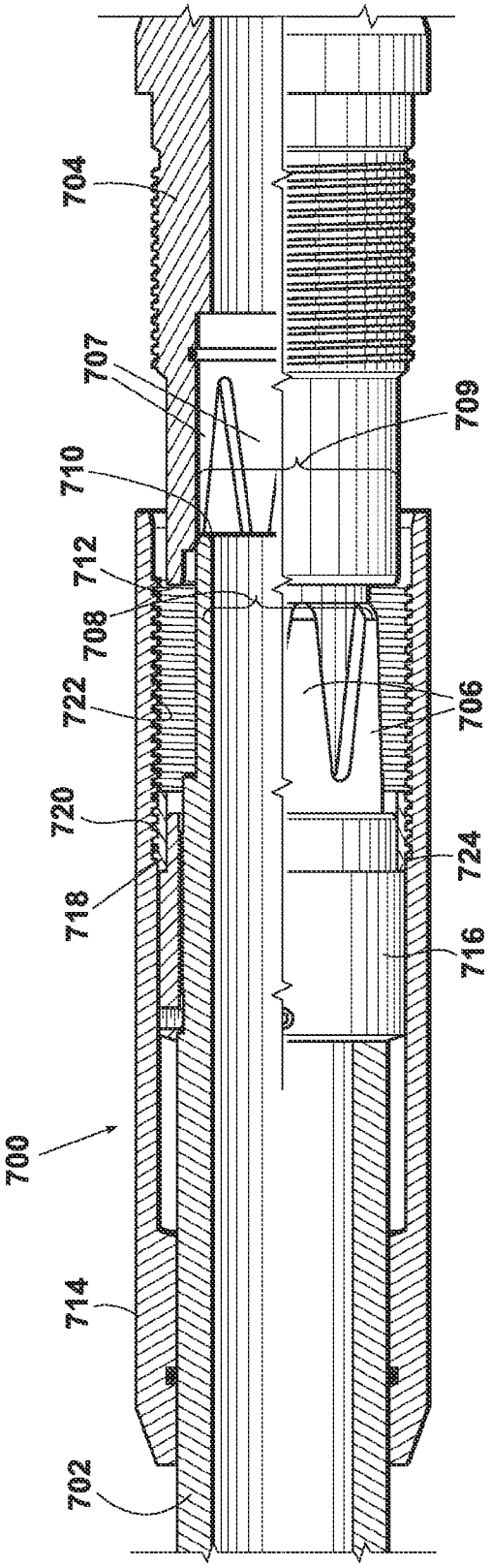
704
707
709
710
712
708
722
706
720
724
718
716
700
714
702

Fig. 7

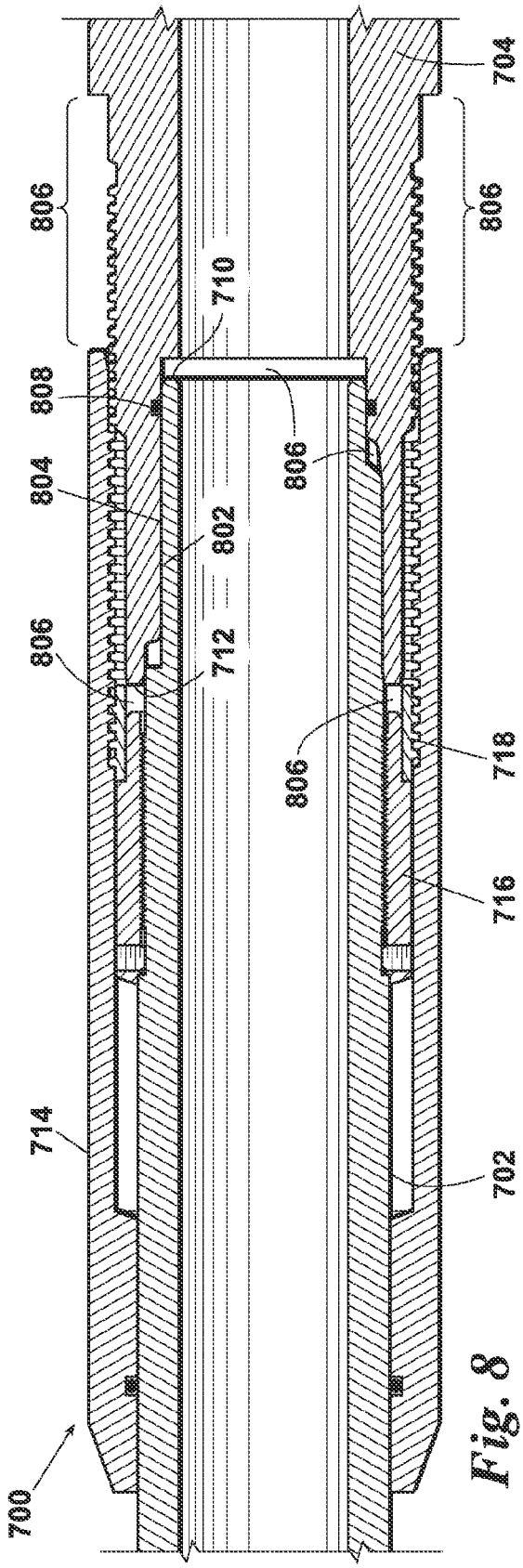
704
806
806
710
808
806
804
802
806
712
806
718
716
714
702
700

Fig. 8

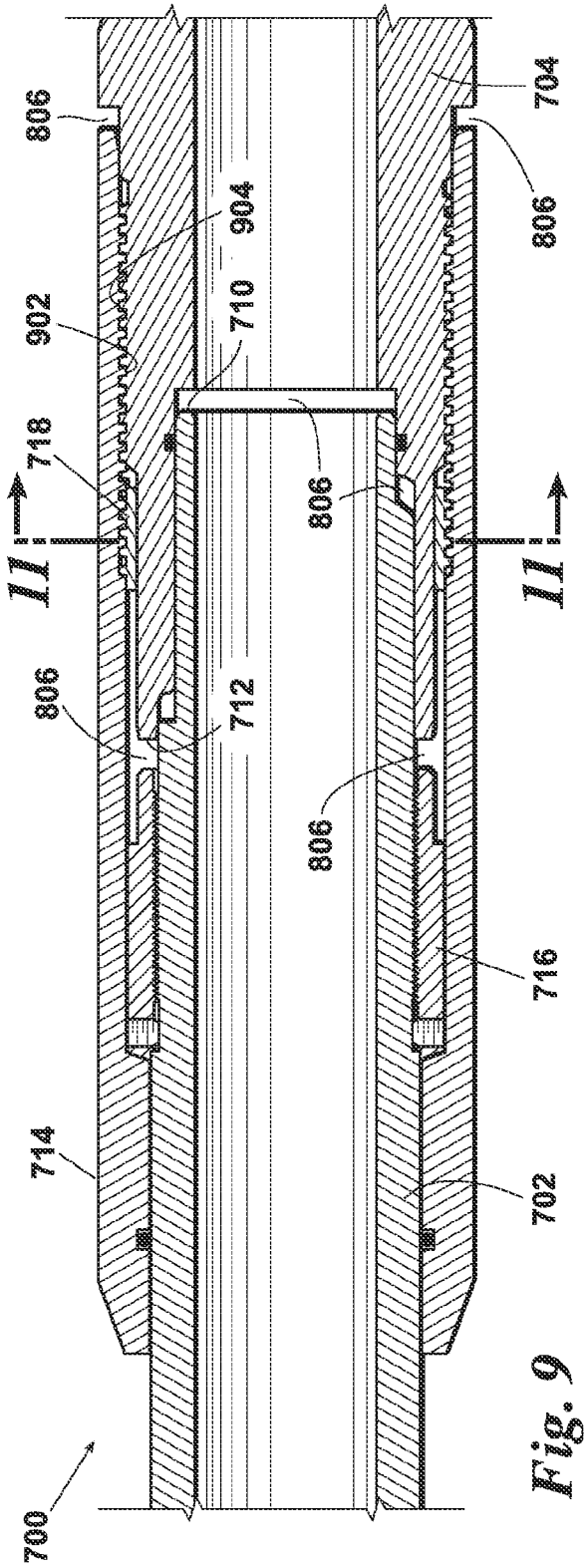
806
704
904
806
902
710
718
806
II
II
806
712
806
716
714
702
700

Fig. 9

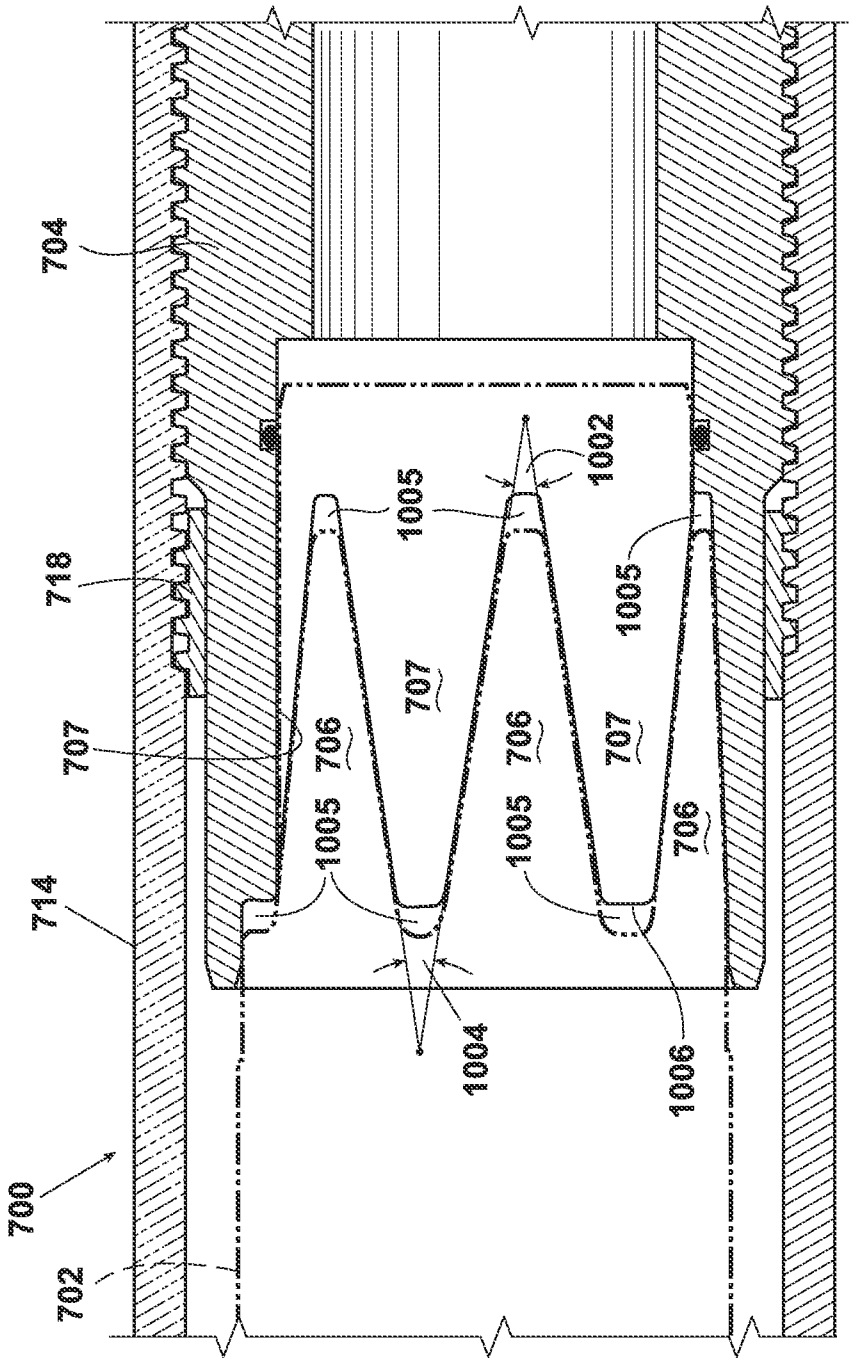
704
718
707
714
700
702
1002
1005
1005
707
706
706
707
1005
1005
706
1004
1006

Fig. 10

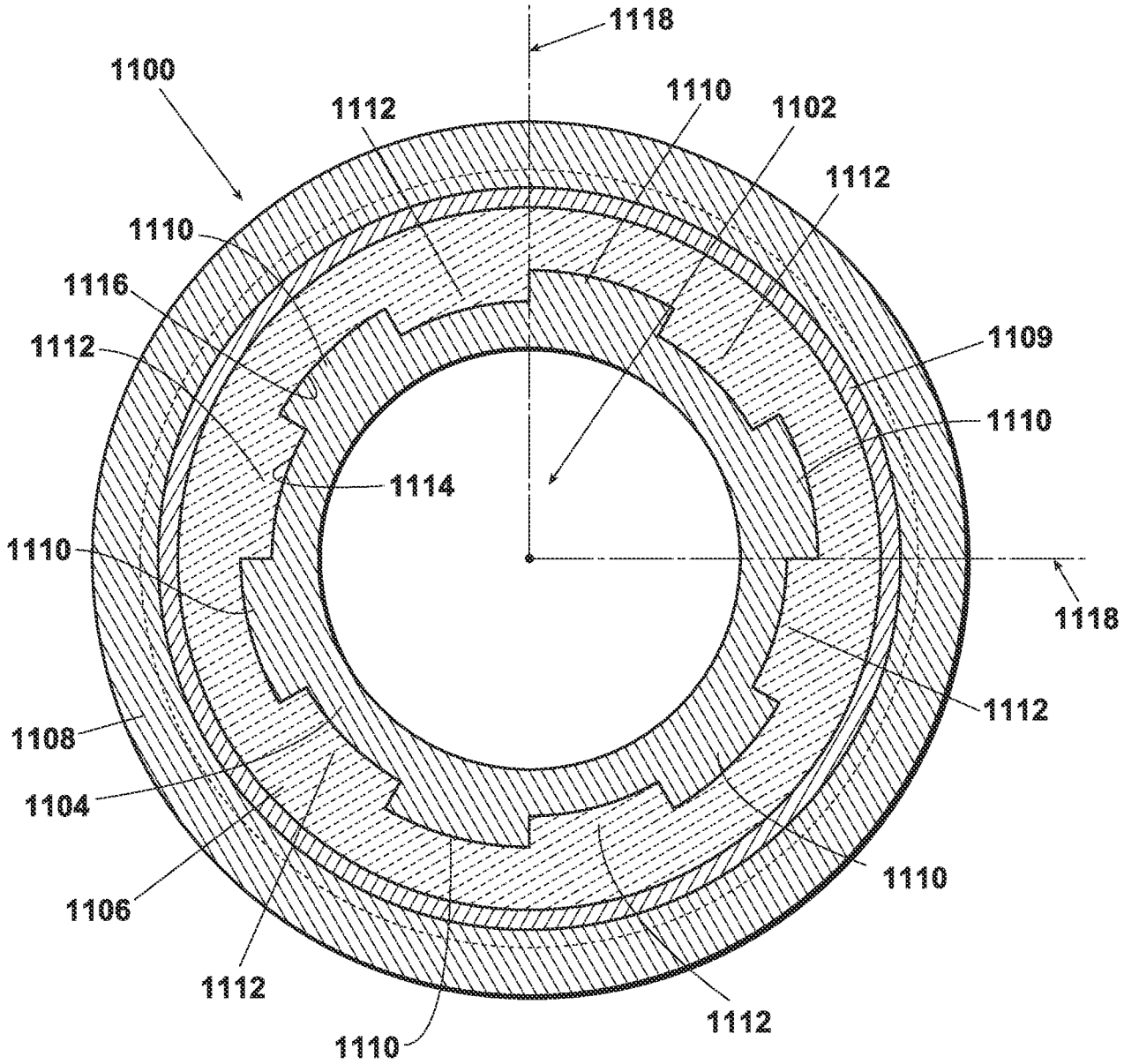
1118
1100
1112
1110
1102
1112
1110
1116
1112
1109
1110
1114
1110
1118
1112
1108
1104
1110
1106
1112
1112
1110

Fig. 11

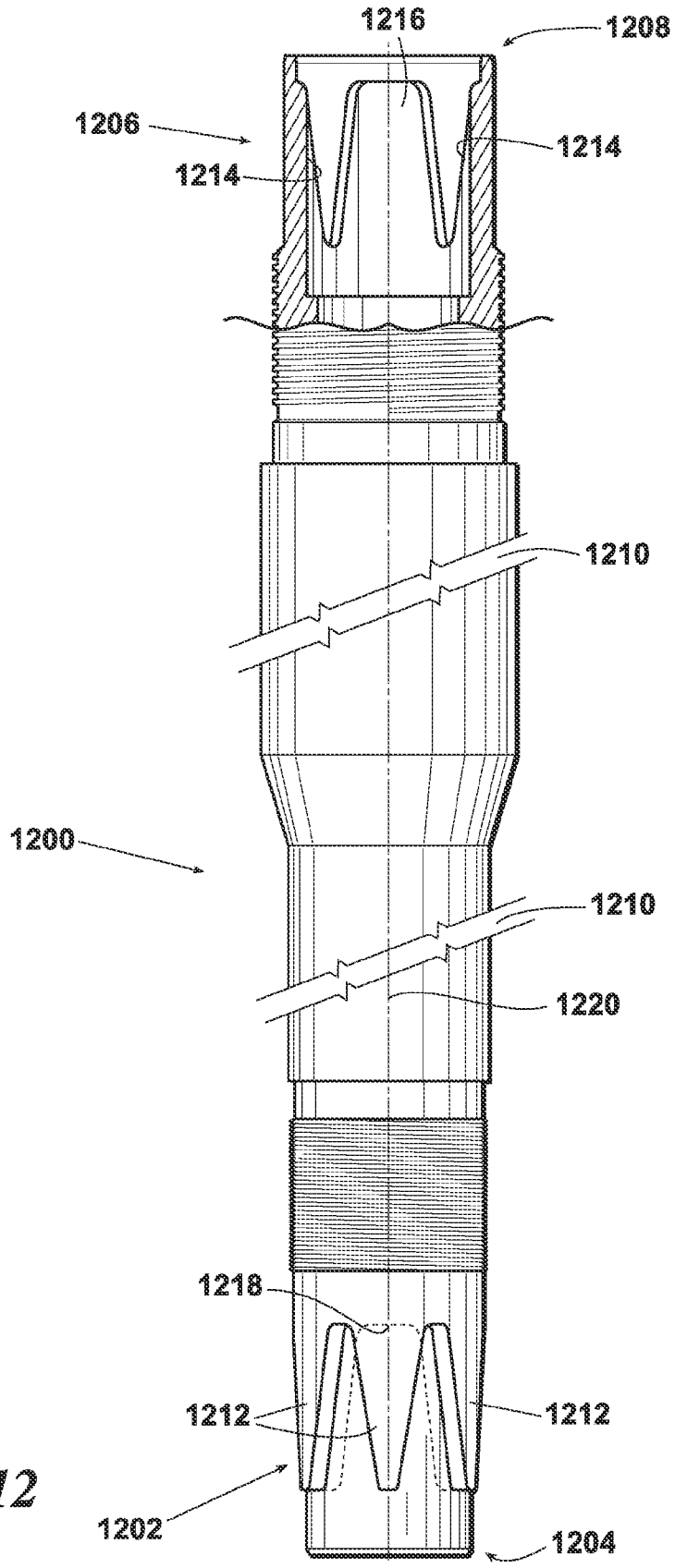
1216
1208
1206
1214
1214
1210
1200
1210
1220
1218
1212
1212
1202
1204

Fig. 12

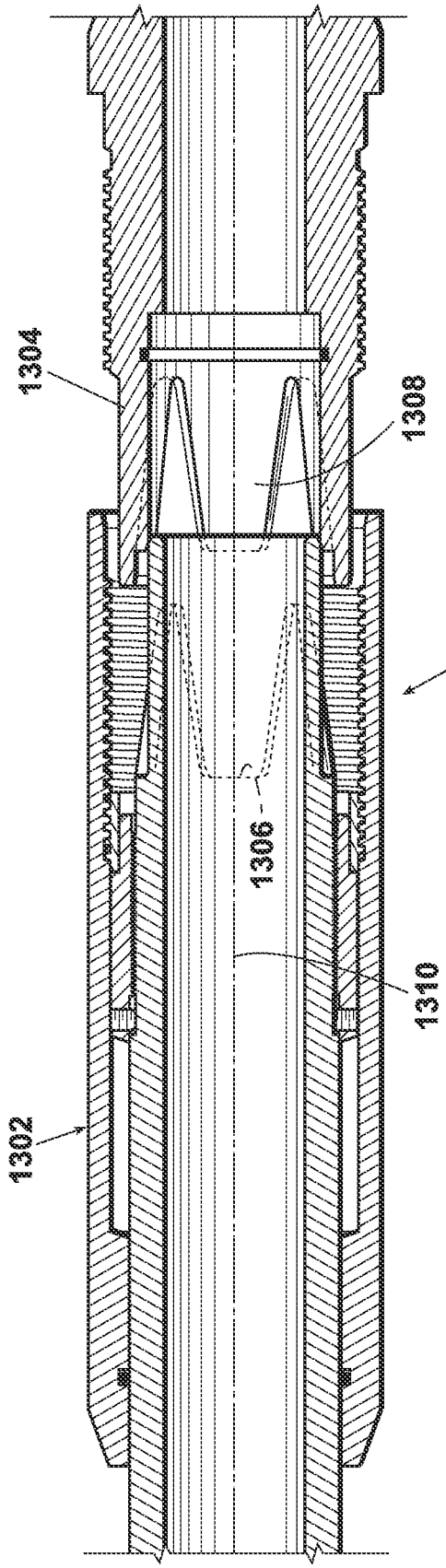

Fig. 13

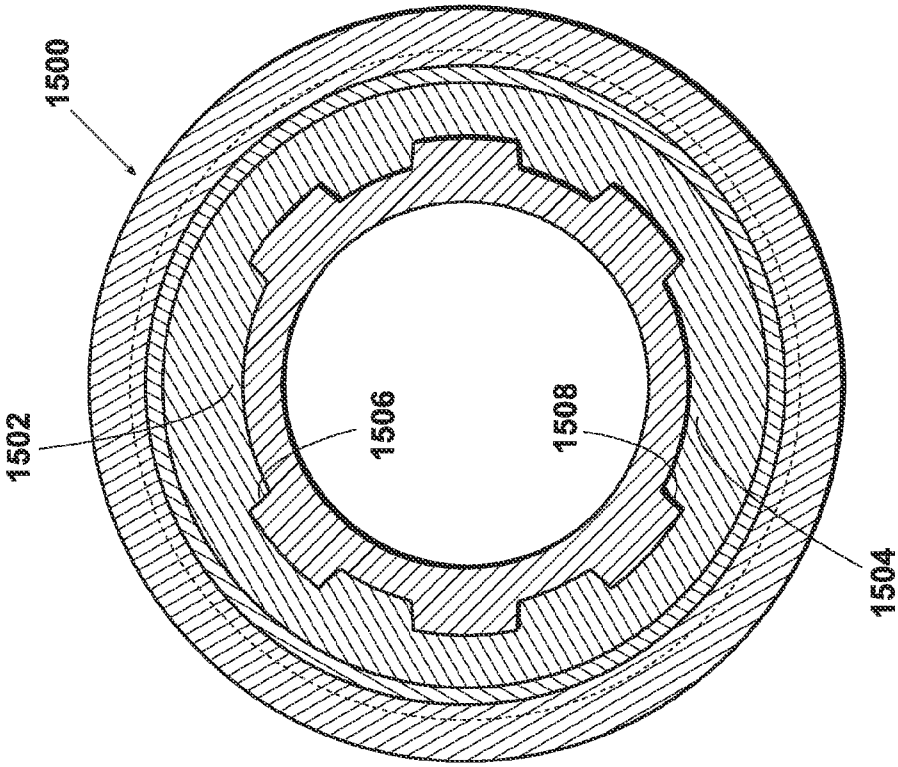

Fig. 15

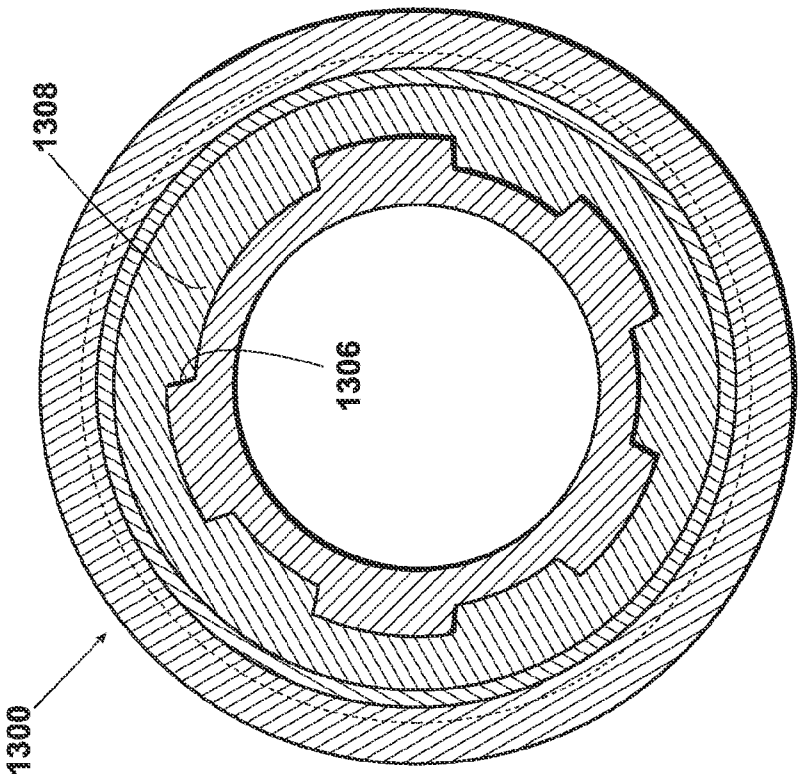

Fig. 14

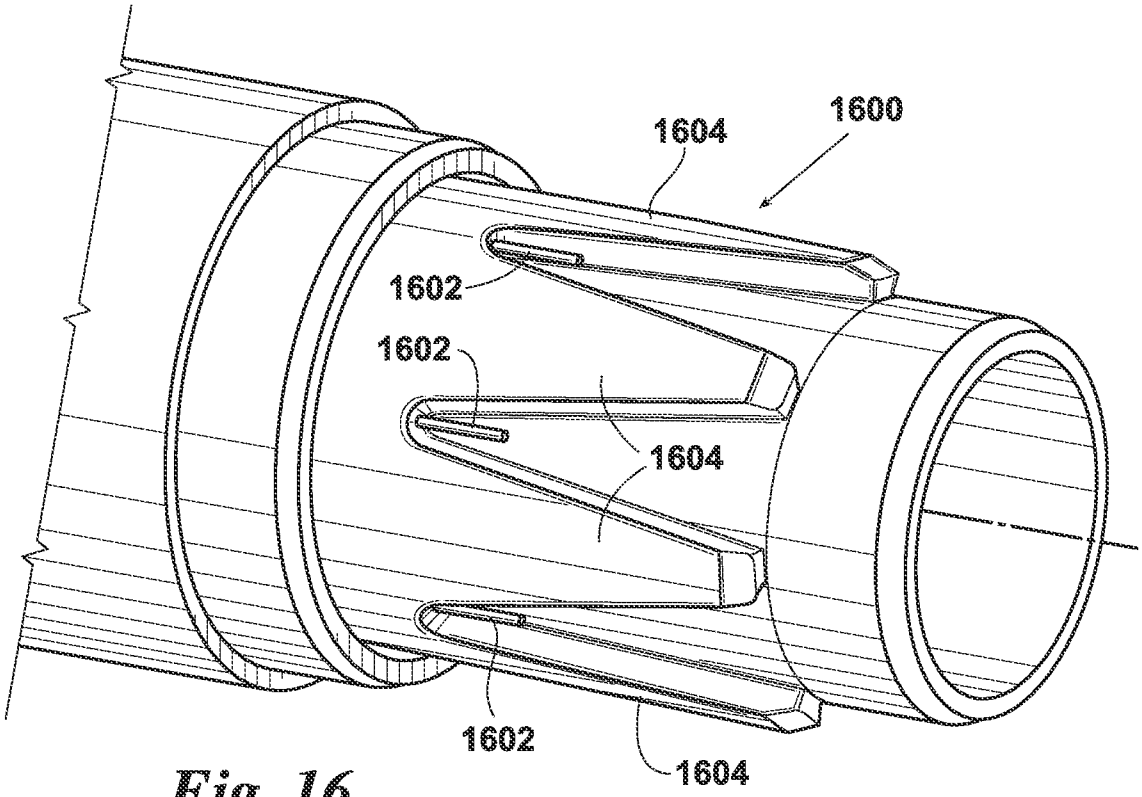
1604
1600
1602
1602
1604
1602
1604

Fig. 16

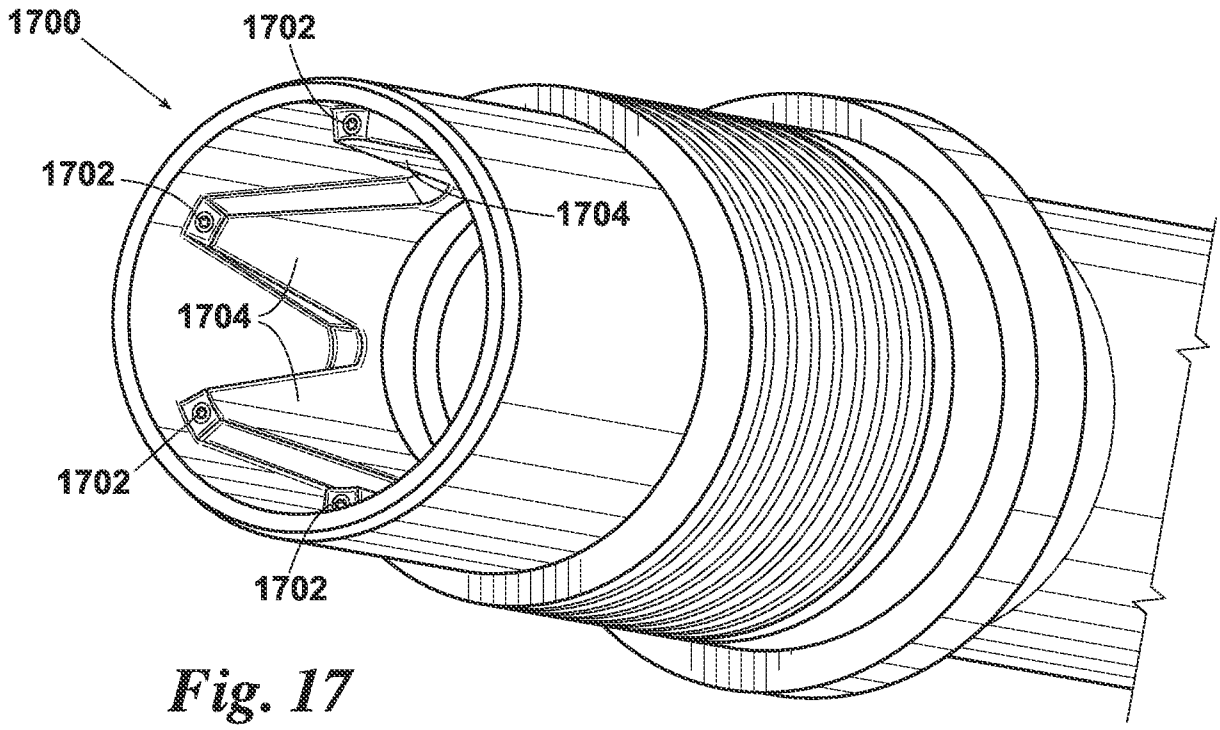
1700
1702
1702
1704
1704
1702
1702

Fig. 17

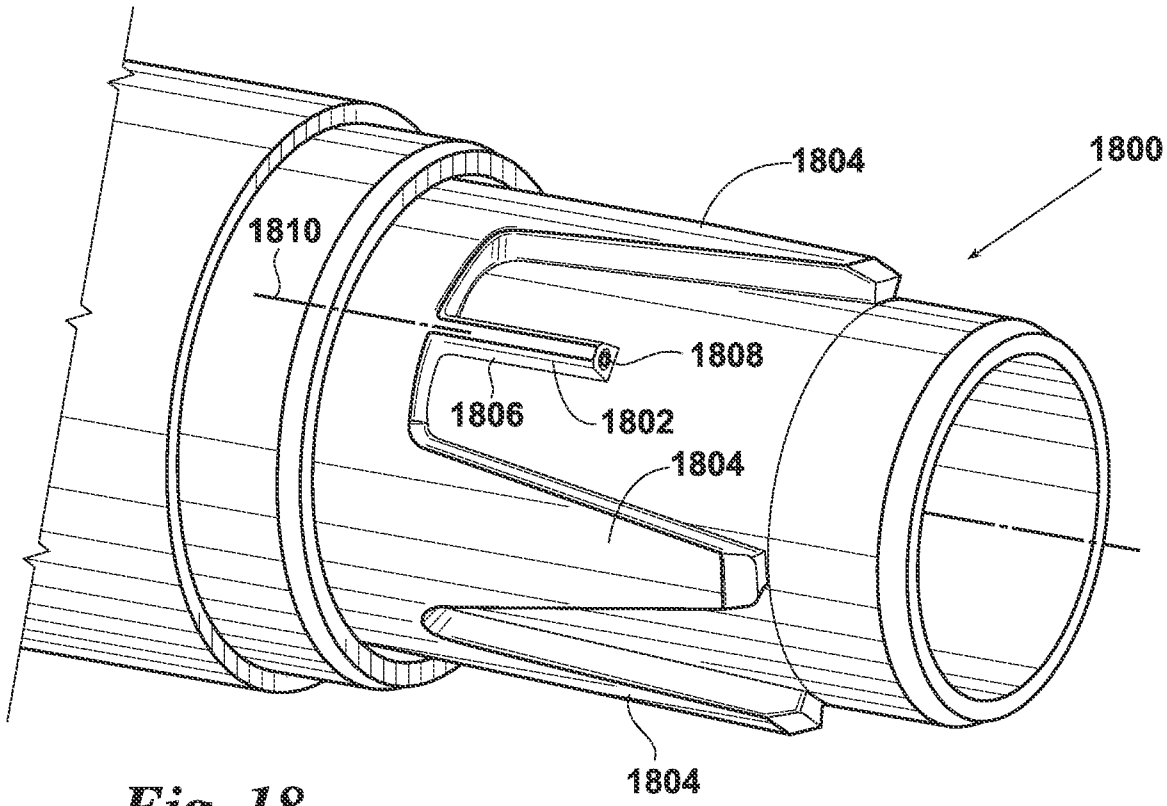
1804
1800
1810
1808
1806
1802
1804
1804

Fig. 18

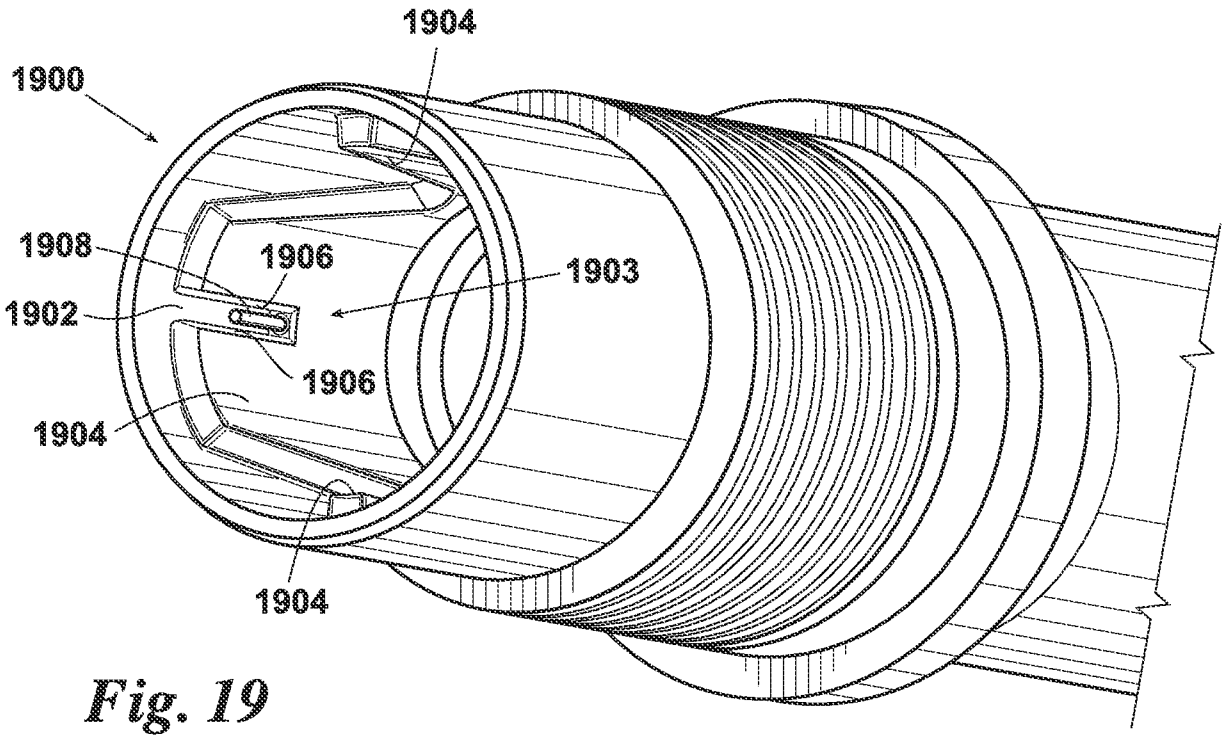
1904
1900
1908
1906
1903
1902
1906
1904
1904

Fig. 19

INTERNATIONAL SEARCH REPORT

International application No.
PCT/IB 11/50329

A. CLASSIFICATION OF SUBJECT MATTER
IPC(8) - E21B 17/02 (2010.01)
USPC - 285/330
According to International Patent Classification (IPC) or to both national classification and IPC

B. FIELDS SEARCHED

Minimum documentation searched (classification system followed by classification symbols)
IPC(8): E21B 17/02 (2010.01)
USPC: 285/330

Documentation searched other than minimum documentation to the extent that such documents are included in the fields searched
USPC: 166/378, 380, 377, 379, 242.1, 242.2, 242.6, 243; 285/$

Electronic data base consulted during the international search (name of data base and, where practicable, search terms used)
Thomson Innovation; Google/Patents; Google/Scholar; EPO Esp@cenet
Search terms: connector, coupler, coupling, pipe, tubing, tubular, conduit, tube, spline, groove, channel, teeth, tooth, key, intermesh, interconnect, interlock, taper, narrow, wedge, triangle, tip, point, ring, collet, collar, sleeve, thread, gap, electric, contact, etc.

C. DOCUMENTS CONSIDERED TO BE RELEVANT

Category*	Citation of document, with indication, where appropriate, of the relevant passages	Relevant to claim No.
Y	US 7,390,032 B2 (HUGHES) 24 June 2008 (24.06.2008), Figs. 13, 15-17, 19, 20, 23-28; col 10, lns 10-13	1-3, 4/1, 4/2, 4/3, 9, 12-14, 15/12, 15/13, 15/14
Y	US 2,089,168 A (BROWN) 03 August 1937 (03.08.1937), col 1, lns 1-4; col 2, lns 47-55; col 3, lns 1-4; Figs. 2, 3, 5	1-3, 4/1, 4/2, 4/3, 9, 12-14, 15/12, 15/13, 15/14 2, 3, 13, 4/2, 4/3, 14, 15/13, 15/14
Y	GB 2 233 415 A (LEMONS) 09 January 1991 (09.01.1991), Abstract; Fig. 1; pages 2 and 3	4/1, 4/2, 4/3, 15/12, 15/13, 15/14
Y	US 6,547,479 B2 (DOWLING, JR. et al.) 15 April 2003 (14.04.2003), col 1, lns 8-14; Fig. 2	1-3, 4/1, 4/2, 4/3, 9, 12-14, 15/12, 15/13, 15/14
A	US 7,226,090 B2 (HUGHES) 05 June 2007 (05.06.2007), Figs. 3, 9	1-3, 4/1, 4/2, 4/3, 9, 12-14, 15/12, 15/13, 15/14
A	US 6,666,274 B2 (HUGHES) 23 December 2003 (23.12.2003), Figs. 1-3, 8	

☒ Further documents are listed in the continuation of Box C. ☐

* Special categories of cited documents:
"A" document defining the general state of the art which is not considered to be of particular relevance
"E" earlier application or patent but published on or after the international filing date
"L" document which may throw doubts on priority claim(s) or which is cited to establish the publication date of another citation or other special reason (as specified)
"O" document referring to an oral disclosure, use, exhibition or other means
"P" document published prior to the international filing date but later than the priority date claimed
"T" later document published after the international filing date or priority date and not in conflict with the application but cited to understand the principle or theory underlying the invention
"X" document of particular relevance; the claimed invention cannot be considered novel or cannot be considered to involve an inventive step when the document is taken alone
"Y" document of particular relevance; the claimed invention cannot be considered to involve an inventive step when the document is combined with one or more other such documents, such combination being obvious to a person skilled in the art
"&" document member of the same patent family

Date of the actual completion of the international search	Date of mailing of the international search report
08 June 2011 (08.06.2011)	21 JUN 2011
Name and mailing address of the ISA/US Mail Stop PCT, Attn: ISA/US, Commissioner for Patents P.O. Box 1450, Alexandria, Virginia 22313-1450 Facsimile No. 571-273-3201	Authorized officer: Lee W. Young PCT Helpdesk: 571-272-4300 PCT OSP: 571-272-7774

Form PCT/ISA/210 (second sheet) (July 2009)

INTERNATIONAL SEARCH REPORT

International application No.
PCT/IB 11/50329

C (Continuation). DOCUMENTS CONSIDERED TO BE RELEVANT

Category*	Citation of document, with indication, where appropriate, of the relevant passages	Relevant to claim No.
A	US 6,761,574 B1 (SONG et al.) 13 July 2004 (13.07.2004), Abstract	1-3, 4/1, 4/2, 4/3, 9, 12-14, 15/12, 15/13, 15/14

INTERNATIONAL SEARCH REPORT

International application No.
PCT/IB 11/50329

Box No. II Observations where certain claims were found unsearchable (Continuation of item 2 of first sheet)

This international search report has not been established in respect of certain claims under Article 17(2)(a) for the following reasons:

1. ☐ Claims Nos.:
because they relate to subject matter not required to be searched by this Authority, namely:

2. ☐ Claims Nos.:
because they relate to parts of the international application that do not comply with the prescribed requirements to such an extent that no meaningful international search can be carried out, specifically:

3. ☒ Claims Nos.: 5-8, 10, 11
because they are dependent claims and are not drafted in accordance with the second and third sentences of Rule 6.4(a).

Box No. III Observations where unity of invention is lacking (Continuation of item 3 of first sheet)

This International Searching Authority found multiple inventions in this international application, as follows:

1. ☐ As all required additional search fees were timely paid by the applicant, this international search report covers all searchable claims.

2. ☐ As all searchable claims could be searched without effort justifying additional fees, this Authority did not invite payment of additional fees.

3. ☐ As only some of the required additional search fees were timely paid by the applicant, this international search report covers only those claims for which fees were paid, specifically claims Nos.:

4. ☐ No required additional search fees were timely paid by the applicant. Consequently, this international search report is restricted to the invention first mentioned in the claims; it is covered by claims Nos.:

Remark on Protest

☐ The additional search fees were accompanied by the applicant's protest and, where applicable, the payment of a protest fee.

☐ The additional search fees were accompanied by the applicant's protest but the applicable protest fee was not paid within the time limit specified in the invitation.

☐ No protest accompanied the payment of additional search fees.