US 20070092198A1

(19) United States

(12) Patent Application Publication

(10) Pub. No.: US 2007/0092198 A1

(43) Pub. Date: Apr. 26, 2007

LANDT

(54) METHOD AND SYSTEM FOR AUTOMATED SIMULATION OF CABLE FAILURE IN A NETWORK

(75) Inventor: **Matthew Eugene LANDT**, Round Rock, TX (US)

Correspondence Address:
IBM CORP.
c/o SAWYER LAW GROUP LLP
P.O. BOX 51418
PALO ALTO, CA 94303 (US)

(73) Assignee: **International Business Machines Corporation**, Armonk, NY

(21) Appl. No.: **11/538,267**

(22) Filed: **Oct. 3, 2006**

Related U.S. Application Data

(62) Division of application No. 10/439,038, filed on May 15, 2003, now Pat. No. 7,146,091.

Publication Classification

(51) **Int. Cl.**
G02B 6/00 (2006.01)

(52) **U.S. Cl.** **385/147**

(57) **ABSTRACT**

A method, system, and device for simulating cable failures in a network are provided. In one implementation, the method includes providing a network including a plurality of devices coupled to one another via a plurality of optical cables, in which one or more of the plurality of network devices comprises any one of a switch operable to provide fabric connectivity among devices within the network, a computer system, or a storage device. The method further includes coupling a programmable device on one of the plurality of optical cables, in which the programmable device is operable to be controlled to simulate a cable failure on the one optical cable having the programmable device coupled thereto. The programmable device provides number-controlled simulated cable failures.

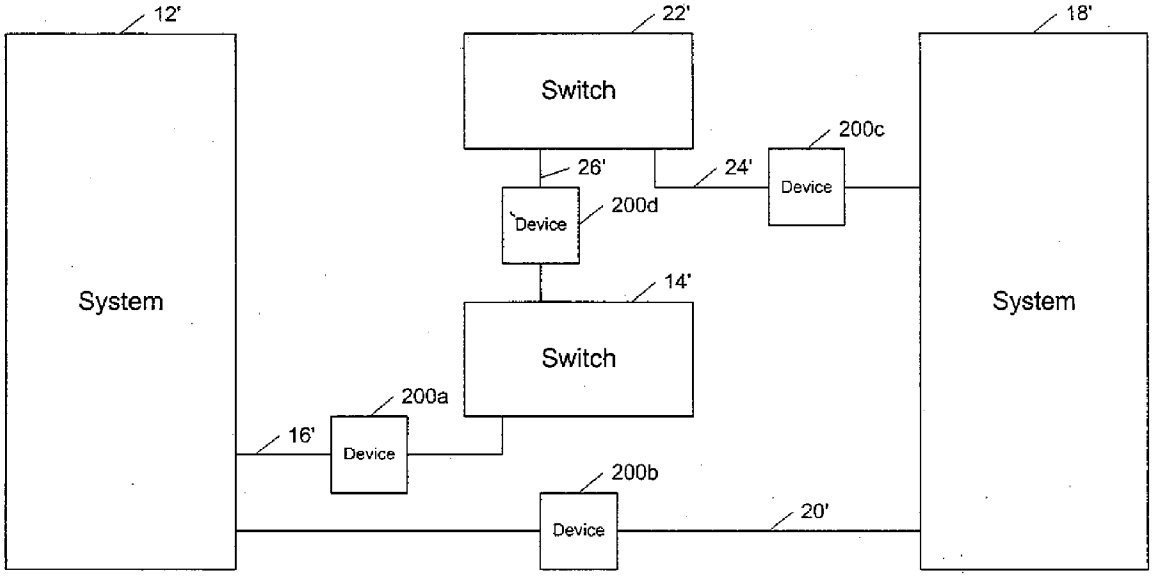

100

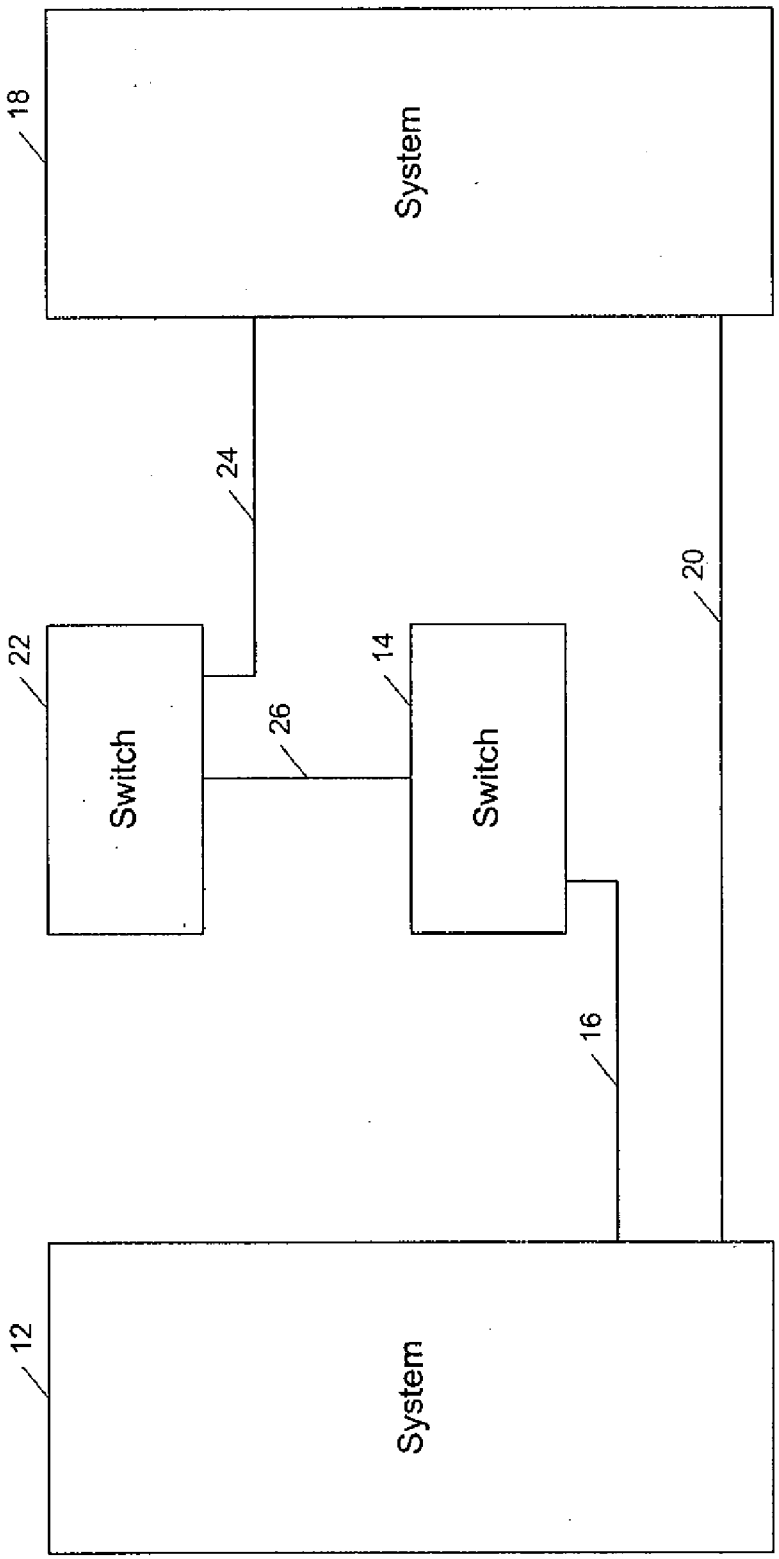

10

Figure 1

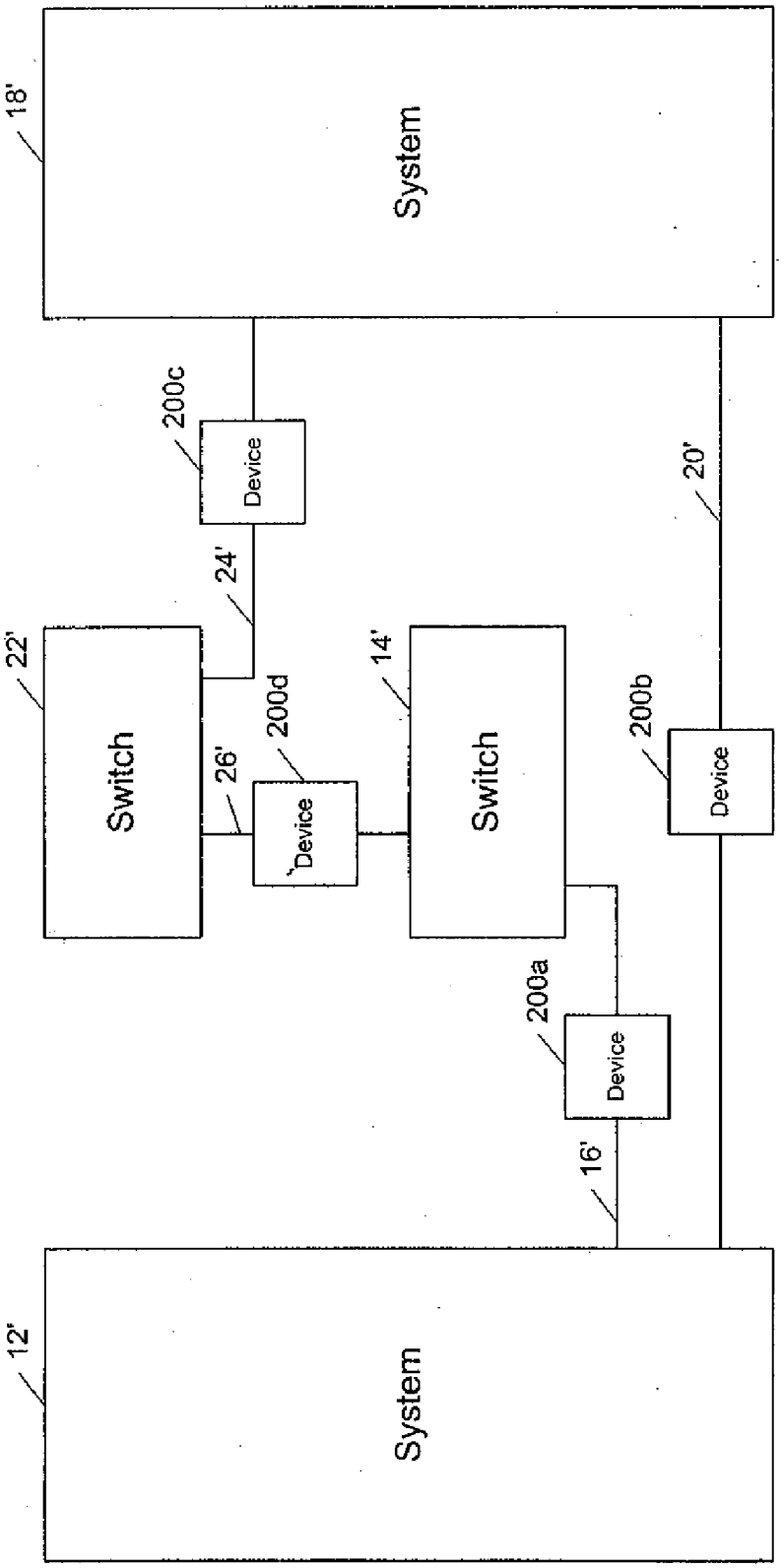
18'
System
200c
Device
24'
22'
Switch
26'
200d
Device
14'
Switch
200b
Device
20'
200a
Device
16'
12'
System

100

Figure 2

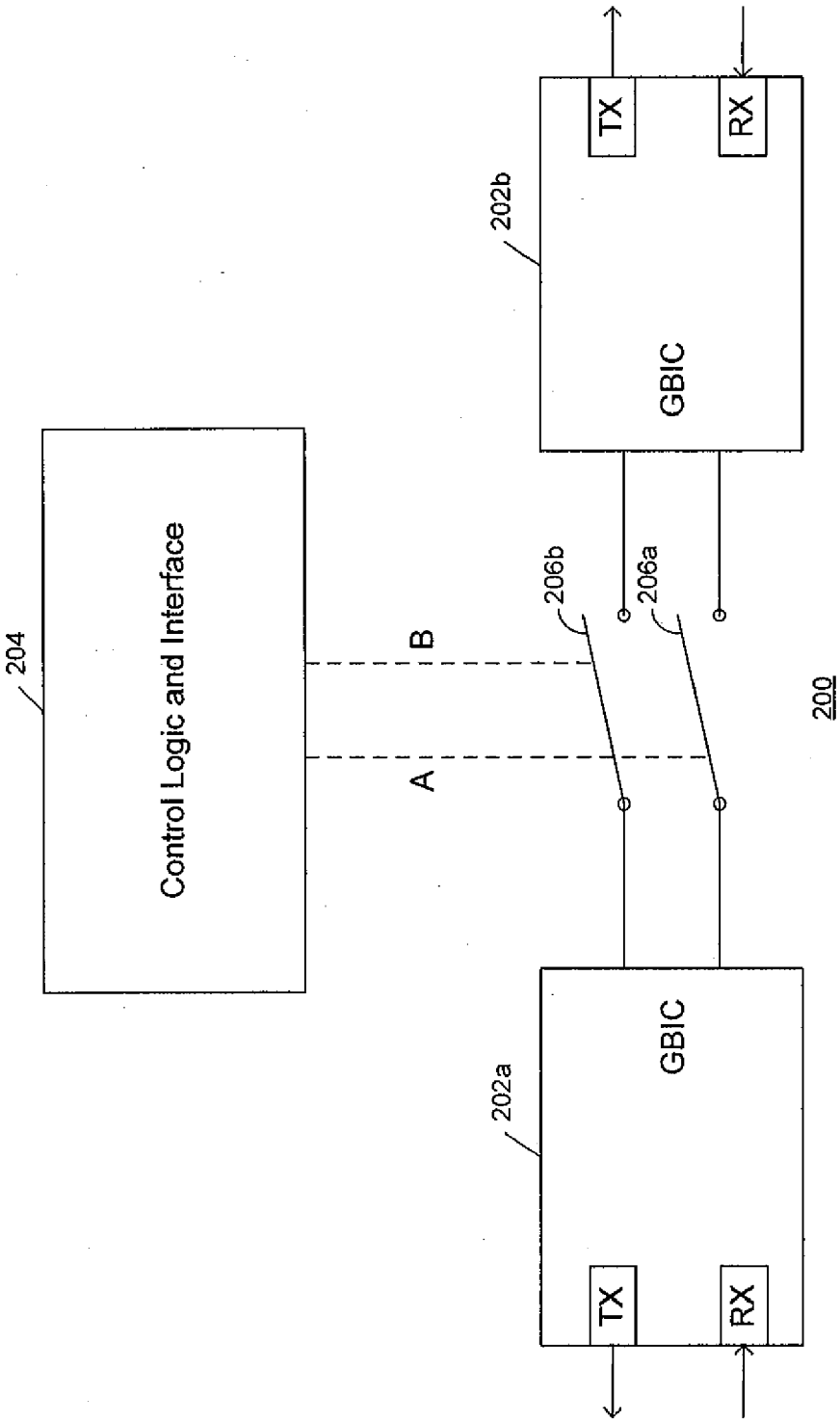
204
Control Logic and Interface
B
A
206b
206a
202b
GBIC
TX
RX
202a
GBIC
TX
RX
200

Figure 3

METHOD AND SYSTEM FOR AUTOMATED SIMULATION OF CABLE FAILURE IN A NETWORK

CROSS-REFERENCE TO RELATED APPLICATIONS

[0001] This application is a divisional of U.S. patent application Ser. No. 10/439,038, entitled "Method And System For Automated Simulation of Cable Failure In A Network", filed May 15, 2003.

FIELD OF THE INVENTION

[0002] The present invention relates generally to optical systems and more particularly to simulating cable failures when testing optical devices.

BACKGROUND OF THE INVENTION

[0003] FIG. **1** is a block diagram of a conventional network **10**. The network **10** includes a computer system **12** which is coupled to a first fabric connectivity switch **14** by one optical cable **16** and is coupled to a storage device **18** by another optical cable **20**. The storage device **18** is also coupled to a second fabric connectivity switch **22** by an optical cable **24**. Finally, the fabric connectivity switch **14** is coupled to the second switch by an optical cable **26**.

[0004] Simulating cable failures in a network such as network **10** is critical to development, testing, and quality assurance for devices utilized in the network. Conventional approaches to simulating cable failures include simulation via cables being manually pulled, providing expensive optical attenuators, or utilizing the existing switches that are provided for fabric connectivity and not for the simulation of cable failures. Each of these conventional approaches is described herein below.

Manual Simulation of Cable Failures

[0005] Simulating cable failures manually is not an adequate approach because manual simulations are both inaccurately timed and also expensive to simulate over a period of time because persons must be employed to actually pull the cable. In human terms, the timing can not be much more accurate than within 0.5 seconds. Proper cable testing should be able to constantly provide a length of failure to within 0.001 seconds or better. Also, to stimulate hundreds of cable failures, one or more persons must work night and day. The method and system in accordance with the present invention, in contrast, allows for cable failures to be simulated automatically during any time period and at any time, thereby freeing up human and capital resources.

Utilization of Attenuators for Simulating Cable Failures

[0006] Attenuators can also be utilized for simulating cable failures. An attenuator can provide an automated method for cable failures, but its simulation functions by turning down the level of light until it is a very small percentage of the proper signal. This is not as accurate as complete loss of light which the method and system in accordance with the present invention provides. Attenuators are also very expensive devices that are used for many other purposes than just cable failures.

Utilization of Fabric Connectivity Switches for Simulating Cable Failures

[0007] A third conventional approach is to utilize fabric connectivity switches for simulating cable failures and determining optical connectivity. Fabric connectivity switches utilized for this purpose are typically very expensive. The ports on the fabric connectivity switch can be taken offline, thus simulating a cable failure. These switches are not intended for such test operations. Also, a fabric connectivity switch is a device to be tested in this environment. Using the fabric connectivity switch to simulate its own cable failure could alter the outcome and may not give accurate information. This environment is also intelligent so that if the fabric connectivity switches are connected, trying to simulate a cable failure between an adapter and a disk with a fabric connectivity switch is impossible.

BRIEF SUMMARY OF THE INVENTION

[0008] In general, in one aspect, this specification describes a method for simulating a cable failure in a network. The method includes providing a network including a plurality of devices coupled to one another via a plurality of optical cables, in which one or more of the plurality of network devices comprises any one of a switch operable to provide fabric connectivity among devices within the network, a computer system, or a storage device. The method further includes coupling a programmable device on one of the plurality of optical cables, in which the programmable device is operable to be controlled to simulate a cable failure on the one optical cable having the programmable device coupled thereto. The programmable device provides number-controlled simulated cable failures.

[0009] In general, in another aspect, this specification describes a network including a plurality of devices, in which one or more of the plurality of devices comprises any one of a switch operable to provide fabric connectivity among devices within the network, a computer system, or a storage device. The network further includes a plurality of optical cables for interconnecting the plurality of devices, and a programmable device coupled to one of the plurality of optical cables. The programmable device is operable to be controlled to simulate a cable failure on the one optical cable having the programmable device coupled thereto. The programmable device further provides number-controlled simulated cable failures.

[0010] In general, in another aspect, this specification describes a programmable device to be controlled to simulate a cable failure on an optical cable in a network. The network includes a plurality of devices coupled to one another via a plurality of optical cables, in which one or more of the plurality of devices comprises any one of a switch operable to provide fabric connectivity among devices within the network, a computer system, or a storage device. The programmable device includes a first converter to be coupled to a first end of an optical cable in the network, a second converter to be coupled to a second end of the optical cable in the network, and a switch coupled between the first converter and the second converter. The programmable device further includes a control logic to control functioning of the switch coupled between the first converter and the second converter to simulate a cable failure on the optical cable in the network. The programmable device provides number-controlled simulated cable failures.

[0011] The details of one or more implementations are set forth in the accompanying drawings and the description below. Features and advantages will be apparent from the description and drawings.

BRIEF DESCRIPTION OF THE DRAWINGS

[0012] FIG. **1** is a block diagram of a conventional network.

[0013] FIG. **2** is a block diagram of a network in accordance with the present invention which is coupled together utilizing optical cable.

[0014] FIG. **3** illustrates an embodiment of a device which could be utilized in accordance with the present invention.

[0015] Like reference symbols in the various drawings indicate like elements.

DETAILED DESCRIPTION OF THE INVENTION

[0016] The present invention relates generally to optical systems and more particularly to stimulating cable failures when testing optical devices. The following description is presented to enable one of ordinary skill in the art to make and use the invention and is provided in the context of a patent application and its requirements. The present invention is not intended to be limited to the embodiment shown but is to be accorded the widest scope consistent with the principles and features described herein.

[0017] The method and system in accordance with the present invention provides an inexpensive, efficient, controlled and automated method for simulating optical cable failures. Although the method and system in accordance with the present invention is described as being utilized for fiber channel I/O cable failure testing, it is not limited to this one environment and can be utilized for all optical cable failure simulators.

[0018] FIG. **2** is a block diagram of a network **100** in accordance with the present invention which is coupled together utilizing optical cable. The network **100** has similar elements to those shown in FIG. **1**. That is, the network **100** includes a computer system **12'**, a first fabric connectivity switch **14'**, a second fabric connectivity switch **22'**, and a storage device **18'**. The network **100** also includes a plurality of devices **200***a*-**200***d* which in this embodiment are coupled to the optical cables. Each of the devices **200***a*-**200***d* can be connected either directly to another device, a fabric connectivity switch, or a hub.

[0019] As shown in FIG. **2**, a first device, **200***a*, is coupled to one optical cable **16'**. A second device, **200***b*, is coupled to the optical cable **20'**. A third device, **200***c*, is coupled to the optical cable **24'**. Finally, a fourth device, **200***d*, is coupled to the optical cable **26'**. Each of the devices **200***a*-**200***d* can be connected in-line at the point where a simulated cable failure is desired. Thereafter the device **200** can be controlled via electrical switches, serial interface and commands, programmed automated commands, or even manual switches, thus allowing for time-controlled and number-controlled cable failure simulations which can greatly surpass conventional human-initiated cable failure simulations in both quantity and precision. In general, the device **200** can be connected in any or all of the positions depicted in the network, the critical feature being a device connected to a cable between two entities.

[0020] For a more detailed description of the features of a device **200**, refer to the following discussion. FIG. **3** illustrates an embodiment of a device **200** which could be utilized in accordance with the present invention. The device **200** comprises a programmed circuitry/control logic **204** coupled between optical to gigabit interface converters (GBICs) **202***a* and **202***b* connected on each side of the programmed circuitry/control logic and interface **204**. Gigabit interface converters (GBICs) are optical to electrical converters utilized for fiber channel I/O. The control logic **204** controls the functioning of switches **206***a* and **206***b* coupled between the GBICs **202***a* and **202***b* to simulate cable failures in a controlled manner. The logic **204** can provide automatic commands or could be coupled to an interface to receive and provide the commands to provide the failure simulation.

[0021] The logic **204** can be implemented in a variety of ways to provide these automatic commands. For example, in the simplest embodiment, a serial interface such as RS 232 interface is provided to the logic **204**. The logic **204** could include software which can be utilized to control the switches between the two GBICs **202***a* and **202***b*. A device coupled to the serial interface (such as a server) could provide signals that would cause the software within the logic **204** to exercise the switches for a predetermined duration time, for a predetermined number of times between failures and for a predetermined number of failures. In a second embodiment, the logic could include a timing chip and a processor built into the logic **204**. Programmable code within the processor can be initiated by a user interface to exercise the switches for a predetermined duration time, for a predetermined number of times between failures and for a predetermined number of failures. Accordingly, there are a variety of systems/embodiments that could be utilized within the logic **204** to control these factors in simulating cable failures.

[0022] The method and system in accordance with the present invention provides an inexpensive, efficient, controlled and automated method for simulating optical cable failures. Accordingly, through the use of a programmable device which can simulate cable failures in a time-controlled and number-controlled manner, an effective system of cable failure simulation is provided.

[0023] Although the present invention has been described in accordance with the embodiments shown, variations to the embodiments can be made. For example, although the present invention has been described for use in a fiber I/O channel failure configuration, a system and method in accordance with the present invention could be utilized in a variety of environments and their use would be within the scope of the present invention.

What is claimed is:

1. A method for simulating a cable failure in a network, the method comprising:

providing a network including a plurality of devices coupled to one another via a plurality of optical cables, wherein one or more of the plurality of devices comprises any one of a switch operable to provide fabric connectivity among devices within the network, a computer system, or a storage device; and

coupling a programmable device on one of the plurality of optical cables, the programmable device to be controlled to simulate a cable failure on the one optical cable having the programmable device coupled thereto,

wherein the programmable device provides number-controlled simulated cable failures.

2. The method of claim 1, wherein the programmable device comprises a switch, control logic, and a converter.

3. The method of claim 2, wherein the control logic provides commands associated with a simulation of a cable failure in the network.

4. The method of claim 3, wherein the control logic receives the commands through a serial interface.

5. The method of claim 2, wherein the converter comprises a gigabit interface converter (GBIC).

6. The method of claim 1, wherein coupling a programmable device on one of the plurality of optical cables includes coupling the programmable device on the one optical cable at a point in the network where a simulated cable failure is desired.

7. The method of claim 1, wherein the one optical cable having the programmable device coupled thereto is a fiber channel I/O cable.

8. A network comprising:

a plurality of devices, wherein one or more of the plurality of devices comprises any one of a switch operable to provide fabric connectivity among devices within the network, a computer system, or a storage device;

a plurality of optical cables for interconnecting the plurality of devices; and

a programmable device coupled to one of the plurality of optical cables, the programmable device to be controlled to simulate a cable failure on the one optical cable having the programmable device coupled thereto,

wherein the programmable device provides number-controlled simulated cable failures.

9. The network of claim 8, wherein the programmable device is coupled to the one optical cable at a point in the network where a simulated cable failure is desired.

10. The network of claim 8, wherein the programmable device comprises a switch, control logic, and a converter.

11. The network of claim 10, wherein the control logic provides commands associated with a simulation of a cable failure in the network.

12. The network of claim 11, further comprising a serial interface to provide the commands to the control logic.

13. The network of claim 10, wherein the converter comprises a gigabit interface converter (GBIC).

14. The network of claim 8, wherein the one optical cable having the programmable device coupled thereto is a fiber channel I/O cable.

15. A programmable device to be controlled to simulate a cable failure on an optical cable in a network, the network including a plurality of network devices coupled to one another via a plurality of optical cables, one or more of the plurality of devices comprises any one of a switch operable to provide fabric connectivity among devices within the network, a computer system, or a storage device, the programmable device comprising:

a first converter to be coupled to a first end of an optical cable in the network;

a second converter to be coupled to a second end of the optical cable in the network;

a switch coupled between the first converter and the second converter; and

a control logic to control functioning of the switch coupled between the first converter and the second converter to simulate a cable failure on the optical cable in the network,

wherein the programmable device provides number-controlled simulated cable failures.

16. The programmable device of claim 15, wherein the first converter and the second converter each comprises a gigabit interface converter (GBIC).

17. The programmable device of claim 15, wherein the optical cable having the first converter and the second converter coupled thereto is a fiber channel I/O cable.

18. The programmable device of claim 15, wherein the control logic receives commands to simulate the cable failure through a serial interface.

* * * * *