(19) LE GOUVERNEMENT
DU GRAND-DUCHÉ DE LUXEMBOURG
Ministère de l'Économie

(11) N° de publication : **LU505591**

(12) **BREVET D'INVENTION** **B1**

(21) N° de dépôt: LU505591

(51) Int. Cl.:
B25J 11/00, B24B 29/00, B24B 19/00

(22) Date de dépôt: 21/11/2023

(30) Priorité:

(43) Date de mise à disposition du public: 21/05/2024

(47) Date de délivrance: 21/05/2024

(73) Titulaire(s):
CHONGQING CITY VOCATIONAL COLLEGE – Chongqing (Chine)

(72) Inventeur(s):
CHEN Shuaihua – Chine

(74) Mandataire(s):
IP SHIELD – 1616 Luxembourg (Luxembourg)

(54) **A processing equipment for industrial robot accessories.**

(57) The present invention discloses a processing equipment for industrial robot accessories, which relates to the field of accessory polishing technology, including a bottom platform. The upper end of the bottom platform is equipped with an installation frame and a support frame, and one side of the support frame is equipped with a support bracket. The lower end of the support bracket is provided with a through groove, and the support bracket is connected to a connecting column at the through groove. The lower end of the connecting column is installed with an installation plate, and an adjustment mechanism for polishing the inner wall of accessories with different inner diameters is installed on the installation plate, The upper end of the installation frame is equipped with a sliding groove, which is connected to a support platform with supporting accessories. The support platform is pushed by a hydraulic cylinder installed on the bottom platform, and several cylinders holding accessories are installed on the upper end of the support platform. The present invention uses a cylinder 2 to push down on a block, which drives the connecting rod to push the slider to slide along the guide groove, adjusts the distance between the two grinding rods, and presses the two grinding rods against the inner wall of the accessory. The motor drives the gear to rotate, and the gear drives the ring gear to drive the installation plate to rotate and drive the grinding rod to polish the inner wall of the accessory.

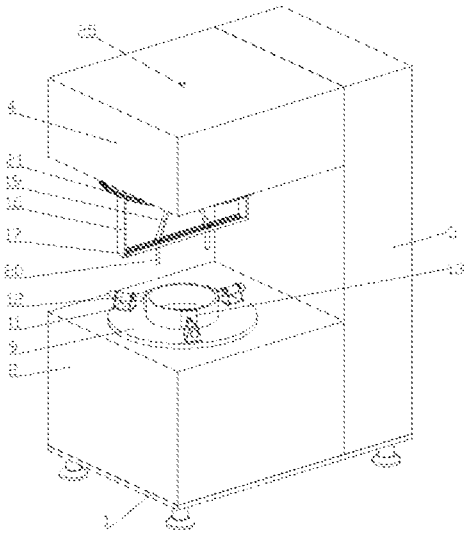

Figure 1

LU505591

A processing equipment for industrial robot accessories

TECHNICAL FIELD

The present invention relates to the field of accessory polishing technology, in particular to a processing equipment for industrial robot accessories.

BACKGROUND

Industrial robots are widely used in the industrial field as multi joint robotic arms or multi degree of freedom machine devices. They have a certain degree of automation and can rely on their own power and control capabilities to achieve various industrial processing and manufacturing functions. Industrial robots are widely used in various industrial fields such as electronics, logistics, and chemical engineering. The main components of the robot include: one axis shaft seat, three axis three-way joint, main arm, cylindrical arm, flipping arm, flange shaft, and other accessories, as well as various types of synchronous wheels, synchronous belts, bearings, cushion blocks, and other accessories. Most of these accessories are made into rough parts by casting or forging, and the size of the rough parts will be larger than the required size during manufacturing and forming, so the rough parts are formed, It is also necessary to perform precision machining on rough parts. For industrial robots with holes or flange accessories, the inner wall of the holes on the accessories needs to be precision machined during precision machining.

In the existing technology, when precision machining the inner wall of the hole on industrial robot accessories, it is necessary to clamp and fix the accessories before performing precision polishing on the inner wall of the hole. However, the polishing head of the existing polishing mechanism is fixed in size and can only polish specific parts internally, and cannot be adjusted and polished according to different parts' inner walls. Therefore, a processing equipment for industrial robot accessories is needed to solve the above problems.

SUMMARY OF THE INVENTION

The purpose of the present invention is to provide a processing equipment for industrial robot accessories to solve the aforementioned multiple defects caused by prior art.

A processing equipment for industrial robot accessories, including a bottom platform, wherein an installation bracket is installed on one side of the upper end of the bottom platform, a support bracket is installed on one side of the installation bracket, a support bracket is installed on one side of the support bracket and directly above the installation bracket, and a through groove is provided at the lower end of the support bracket. The support bracket is rotatably connected to a connecting column at the through groove, and a mounting plate is installed at the lower end of the connecting column, The installation plate is equipped with an adjustment mechanism for polishing the inner walls of fittings with different inner diameters. The upper end of the installation bracket is equipped with a sliding groove, and the sliding groove is connected to a support platform for supporting the fittings. The upper end of the bottom platform is located on the inner side of the installation bracket, and a hydraulic cylinder is installed. The output end of the hydraulic cylinder is connected to the lower bottom side of the support platform. The upper end of the support platform is equipped with several centrally symmetrical brackets, and a cylinder is installed on the bracket, The output end of cylinder 1 is equipped with a clamping block for clamping accessories.

Preferably, the adjustment mechanism comprises a cylinder 2 installed in the middle position of the upper end of the mounting plate, a push block installed at the output end of the cylinder 2, a connecting plate symmetrically installed at the lower end of the mounting plate, a guide groove symmetrically installed on the opposite side of the two connecting plates near the lower end, a sliding block symmetrically connected to the two guide grooves, a connecting rod rotationally connected to the sliding block, and one end of the connecting rod rotationally connected to the push block, The lower end of the slider is equipped with a grinding rod, the side wall of the

mounting plate is equipped with a ring gear, the inner wall of the support frame is equipped with a motor, and the output end of the motor is equipped with a gear that engages the ring gear.

Preferably, the connecting column is equipped with convex rings that are respectively connected to the inner and outer walls of the support frame on the side wall of the through groove.

Preferably, the upper end of the support frame is equipped with a rotating joint.

Preferably, a rubber pad is installed on the contact side between the clamp block and the accessory sidewall.

The advantage of the present invention is that by pressing down on the push block through the second cylinder, the push block drives the connecting rod to push the slider to slide along the guide groove, thereby adjusting the distance between the two grinding rods according to the inner diameter of the accessory, making the two grinding rods contact the inner wall of the accessory. Then, starting the electric machine to drive the gear to rotate, the gear drives the ring gear to drive the installation plate to rotate, and causes the grinding rod to polish the inner wall of the accessory, The entire system can adjust the grinding rod according to the inner wall of different accessories, and polish accessories with different inner diameters, solving the problem of fixed grinding head size in existing grinding mechanisms, which can only polish specific parts internally and cannot be adjusted and polished according to different parts' inner walls.

DESCRIPTION OF DRAWINGS

Figure 1 is a schematic diagram of the overall structure of the present invention.

Figure 2 is a schematic diagram of the internal structure of the installation bracket and support bracket of the present invention.

Figure 3 is a structural schematic diagram of the installation bracket and adjustment mechanism assembly of the present invention.

Figure 4 is a structural schematic diagram of the adjustment mechanism of the

present invention.

Among them: 1- Bottom platform; 2- Installation bracket; 3- Support frame; 4- Support frame; 5-groove; 6- Connection column; 7- Installation plate; 8-chute; 9- Support platform; 10- Hydraulic cylinder; 11- Support; 12- Cylinder 1; 13- Clamp block; 14- Cylinder 2; 15- Pushing block; 16- Connection board; 17- Guide groove; 18- Slider; 19- Connecting rod; 20- Grinding rod; 21- Ring gear; 22- Motor; 23- Gear; 24- convex ring; 25- Rotary joint.

DETAILED DESCRIPTION OF THE INVENTION

In order to facilitate a clear understanding of the technical means, creative features, objectives, and effects of the present invention, the following will further elaborate on the present invention in conjunction with specific implementation methods.

As shown in Figures 1 to 4, a processing equipment for industrial robot accessories includes a base 1, wherein an installation frame 2 is installed on one side of the upper end of the base 1, a support frame 3 is installed on one side of the installation frame 2, and a support frame 4 is installed on one side of the support frame 3 and directly above the installation frame 2. The lower end of the support frame 4 is provided with a through groove 5, and the support frame 4 is rotatably connected to a connecting column 6 at the through groove 5, The lower end of the connecting column 6 is equipped with an installation plate 7, which is equipped with an adjustment mechanism for grinding the inner walls of fittings with different inner diameters. The upper end of the installation frame 2 is equipped with a sliding groove 8, and the sliding groove 8 is connected to the support platform 9 of the support fittings. The upper end of the bottom platform 1 is located on the inner side of the installation frame 2, and a hydraulic cylinder 10 is installed. The output end of the hydraulic cylinder 10 is connected to the lower bottom side of the support platform 9, The upper end of the support platform 9 is equipped with several centrally symmetrical brackets 11, on which a cylinder 12 is installed. The output end of the cylinder 12 is equipped with a

clamping block 13 for clamping accessories. The slide 8 guides and limits the support platform 9.

In this embodiment, the adjustment mechanism comprises a cylinder 2 14 installed in the middle position of the upper end of the mounting plate 7, a push block 15 installed at the output end of the cylinder 2 14, a connecting plate 16 symmetrically installed at the lower end of the mounting plate 7, a guide groove 17 symmetrically installed on the opposite side of the two connecting plates 16 near the lower end, a sliding block 18 symmetrically connected to the two guide grooves 17, and a connecting rod 19 rotationally connected to the sliding block 18, One end of the connecting rod 19 is rotatably connected to the pushing block 15, the lower end of the slider 18 is equipped with a grinding rod 20, the side wall of the mounting plate 7 is equipped with a ring gear 21, the inner wall of the support frame 4 is equipped with a motor 22, and the output end of the motor 22 is equipped with a gear 23 that meshes with the ring gear 21. The opposite sides of the two guide grooves 17 are equipped with square grooves, and the two sides of the slider 18 are equipped with square protrusions that are sliding connected to the grooves inside the guide groove 17. The slider 18 is guided and supported by the square protrusions to avoid tilting of the polishing rod 20 during movement.

In this embodiment, the connecting column 6 is equipped with convex rings 24 that are respectively connected to the inner and outer walls of the support frame 4 on the side wall of the through groove 5. The convex block 24 performs a limit operation on the connecting column 6, and the convex block 24 activates a support function on the connecting column 6, enabling the connecting column 6 to be suspended on the lower side wall of the support frame 4.

In this embodiment, the upper end of the support frame 4 is equipped with a rotary joint 25. The rotary joint 25 ensures that cylinder 2 14 can still supply air source during the rotation process, avoiding the external air pipe from winding and knotting during the rotation process.

In this embodiment, a rubber pad is installed on the contact side between the

clamp block 13 and the accessory sidewall. The rubber pad plays an anti slip and protective role, avoiding scratches on the outer wall of the accessory.

The working principle of the present invention is as follows: place the accessory on the support platform 9, and then activate cylinder 12 to drive the clamping block 13 to move towards the center of the circle to engage the clamping accessory. At the same time, the clamping block 13 adjusts the position of the accessory so that the accessory is on the same axis as the installation plate 7. Then, activate hydraulic cylinder 10 to drive the support platform 9 to slide upwards along the slide channel 8, and make the grinding rod 20 located in the inner tube of the accessory. Then, activate cylinder 14 to press down on the pushing block 15, The pushing block 15 drives the connecting rod 19 to slide the slider 18 along the guide groove 17. The distance between the two grinding rods 20 is adjusted according to the inner diameter of the accessory, so that the two grinding rods 20 are connected to the inner wall of the accessory. Then, the starting motor 22 drives the gear 23 to rotate, and the gear 23 drives the ring gear 21 to drive the installation plate 7 to rotate, causing the grinding rod 20 to polish the inner wall of the accessory. Then, the cylinder 14 drives the pushing block 15 to move up, The connecting rod 19 pulls the slider 18 along the guide groove 17 and slides in opposite directions to reset the grinding rod 20. The hydraulic cylinder 10 is activated to move down and reset the support platform 9. Then, the cylinder 12 is activated in reverse to open the clamp block 13 and remove the accessories to complete a grinding cycle.

The present invention uses cylinder 2 14 to press down on the push block 15, which drives the connecting rod 19 to slide the slider 18 along the guide groove 17. This adjusts the distance between the two grinding rods 20 according to the inner diameter of the accessory, so that the two grinding rods 20 are connected to the inner wall of the accessory. Then, the motor 22 is started to drive the gear 23 to rotate, and the gear 23 drives the ring gear 21 to drive the installation plate 7 to rotate, and the grinding rod 20 is used to polish the inner wall of the accessory, The entire system can adjust the grinding rod 20 according to the inner wall of different accessories, and

polish accessories with different inner diameters, solving the problem of fixed grinding head size in existing grinding mechanisms, which can only polish specific parts internally and cannot be adjusted and polished according to different parts' inner walls.

From technical common sense, it can be seen that the present invention can be implemented through other implementation schemes that are not separated from its spiritual essence or necessary features. Therefore, the publicly disclosed implementation plans mentioned above are only examples in all aspects, and are not exclusive. All changes within the scope of the present invention or within the scope equivalent to the present invention are covered by the present invention.

CLAIMS

1. A processing equipment for industrial robot accessories, characterized in that it includes a bottom platform (1), wherein an installation bracket (2) is installed on one side of the upper end of the bottom platform (1), a support bracket (3) is installed on one side of the installation bracket (2), a support bracket (4) is installed on one side of the support bracket (3), and a support bracket (4) is installed directly above the installation bracket (2). The lower end of the support bracket (4) is provided with a through groove (5), The support bracket (4) is rotationally connected to a connecting column (6) at the groove (5), and a mounting plate (7) is installed at the lower end of the connecting column (6). The mounting plate (7) is equipped with an adjustment mechanism for polishing the inner walls of different inner diameter fittings. The upper end of the mounting bracket (2) is equipped with a sliding groove (8), and a support platform (9) with support fittings is slidably connected to the sliding groove (8), The upper end of the bottom platform (1) is equipped with a hydraulic cylinder (10) located on the inner side of the installation frame (2), and the output end of the hydraulic cylinder (10) is connected to the lower bottom side of the support platform (9). The upper end of the support platform (9) is equipped with several centrally symmetrical brackets (11), and a cylinder (12) is installed on the support frame (11), and the output end of the cylinder (12) is equipped with a clamping block (13) for clamping accessories.

2. A processing device for industrial robot accessories according to claim 1, characterized in that the adjustment mechanism comprises a cylinder two (14) installed in the middle position of the upper end of the mounting plate (7), a push block (15) installed at the output end of the cylinder two (14), a connecting plate (16) symmetrically installed at the lower end of the mounting plate (7), and a guide groove (17) symmetrically installed on the opposite side near the lower end of the two connecting plates (16), The two guide grooves (17) are symmetrically connected by sliding blocks (18), and a connecting rod (19) is rotatably connected to the sliding block (18). One end of the connecting rod (19) is rotatably connected to the pushing block (15), and a polishing rod (20) is installed at the lower end of the sliding block

(18). A ring gear (21) is installed on the side wall of the mounting plate (7), and a motor (22) is installed on the inner wall of the bearing bracket (4), The output end of the motor (22) is equipped with a gear (23) that engages a ring gear (21).

3. The processing equipment for industrial robot accessories according to claim 1, characterized in that the connecting column (6) is equipped with convex rings (24) that are respectively connected to the inner and outer walls of the support frame (4) on the side walls at the through groove (5).

4. The processing equipment for industrial robot accessories according to claim 1, characterized in that the upper end of the support bracket (4) is equipped with a rotating joint (25).

5. The processing equipment for an industrial robot accessory according to claim 1, characterized in that a rubber pad is installed on the contact side between the clamping block (13) and the accessory sidewall.

LU505591

REVENDICATIONS

1. Un équipement de traitement pour robots industriels accessoires, caractérisé en ce qu 'il comprend une table inférieure (1) sur laquelle est monté, d'un côté de son extrémité supérieure, un bâti (2) dont l'extrémité supérieure est montée, d'un côté du bâti (2), sur lequel est monté un chariot porteur (4) dont l'extrémité inférieure est pourvue d'une fente traversante (5), Le chariot porteur (4) est solidaire en rotation, au niveau d'une rainure traversante (5), d'un plot de liaison (6) à l'extrémité inférieure duquel est montée une platine (7) sur laquelle est monté un mécanisme de réglage du ponçage des parois internes des différents raccords de diamètres intérieurs, l'extrémité supérieure du chariot porteur (4) étant munie d'une goulotte (8) à l'intérieur de laquelle est montée coulissante une platine porteuse (9) portant les raccords porteurs, A l'extrémité supérieure de la table inférieure (1) et à l'intérieur du bâti (2) est monté un vérin hydraulique (10) dont la sortie est reliée à la face inférieure d'une table porteuse (9) à l'extrémité supérieure de laquelle sont montés plusieurs supports (11) de symétrie centrale sur lesquels sont montés un cylindre (12) dont la sortie est montée un bloc de serrage (13) de la ferrure de serrage.

2. Dispositif d'usinage d'un accessoire robotique industriel selon la revendication 1, caractérisé en ce que le mécanisme de réglage comprend un vérin deux (14) monté en position intermédiaire à l'extrémité supérieure d'une platine (7) dont la sortie est munie d'un bloc poussoir (15), l'extrémité inférieure de la platine (7) étant munie symétriquement d'une plaque de liaison (16), les deux plaques de liaison (16) étant munies symétriquement, du côté opposé à l'extrémité inférieure, d'une rainure de guidage (17), Les deux rainures de guidage (17) sont reliées à coulissement symétrique intérieurement par un coulisseau (18) sur lequel

est articulée en rotation une tige de liaison (19) dont une extrémité est articulée en rotation sur un poussoir (15), l'extrémité inférieure du coulisseau (18) étant munie d'une tige de ponçage (20), la paroi latérale de la platine (7) étant munie d'une couronne dentée (21) et la paroi interne du chariot porteur (4) étant munie d'un moteur (22), A la sortie de ce moteur (22) est montée une roue dentée (23) engrenant une couronne dentée (21).

3. Dispositif d'usinage d'un accessoire robotique industriel selon la revendication 1, caractérisé en ce que les parois latérales des plots de liaison (6) au niveau des rainures traversantes (5) sont montées avec des anneaux mâles (24) en appui respectivement sur les parois latérales interne et externe du chariot porteur (4).

4. Dispositif d'usinage d'un accessoire robotique industriel selon la revendication 1, caractérisé en ce que l'extrémité supérieure du chariot porteur (4) est munie d'un joint tournant (25).

5. Dispositif d'usinage d'un accessoire robotique industriel selon la revendication 1, caractérisé en ce que la face de contact du bloc de serrage (13) avec la paroi latérale de l'accessoire est munie d'un coussin en caoutchouc.

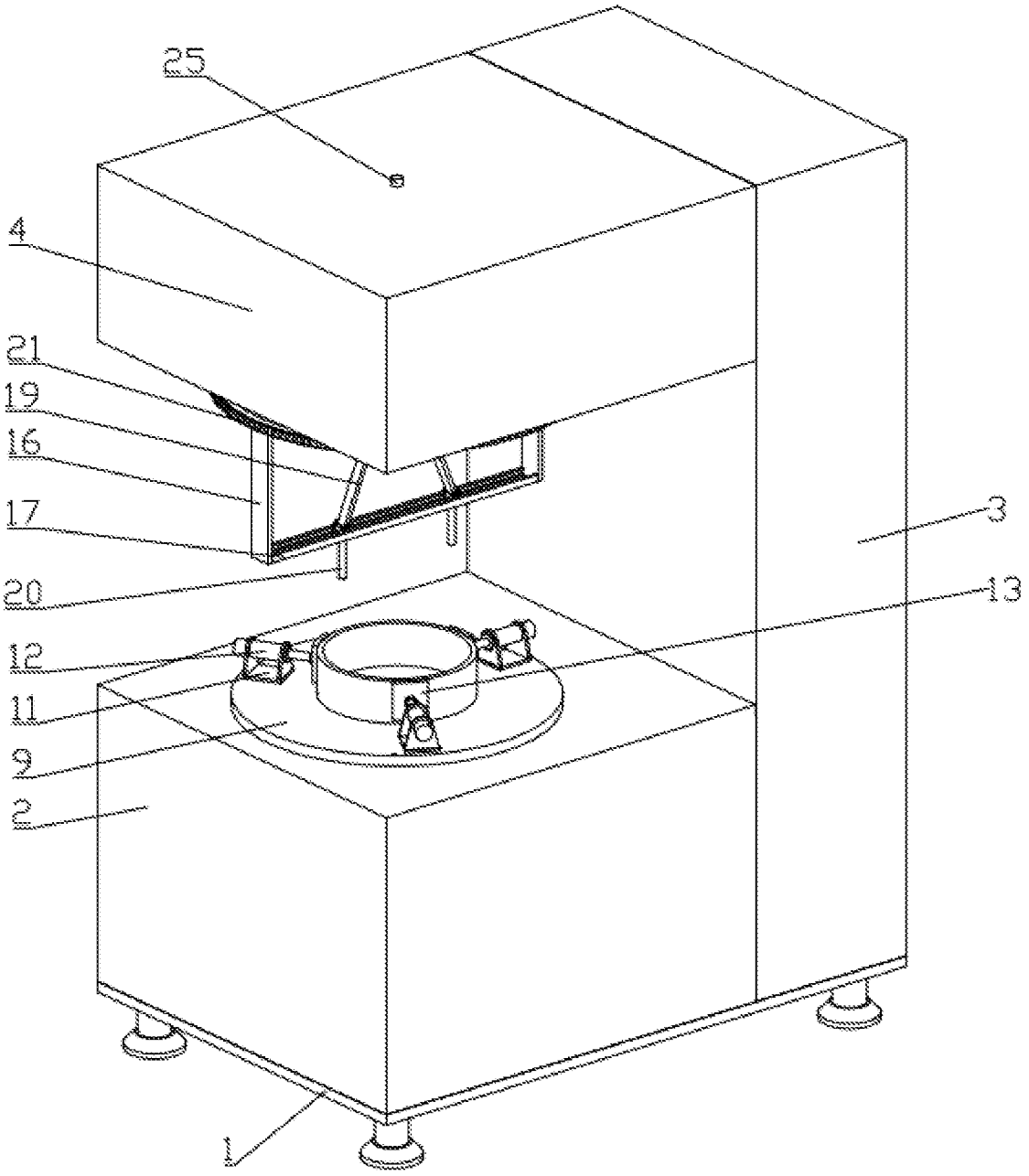

Figure 1

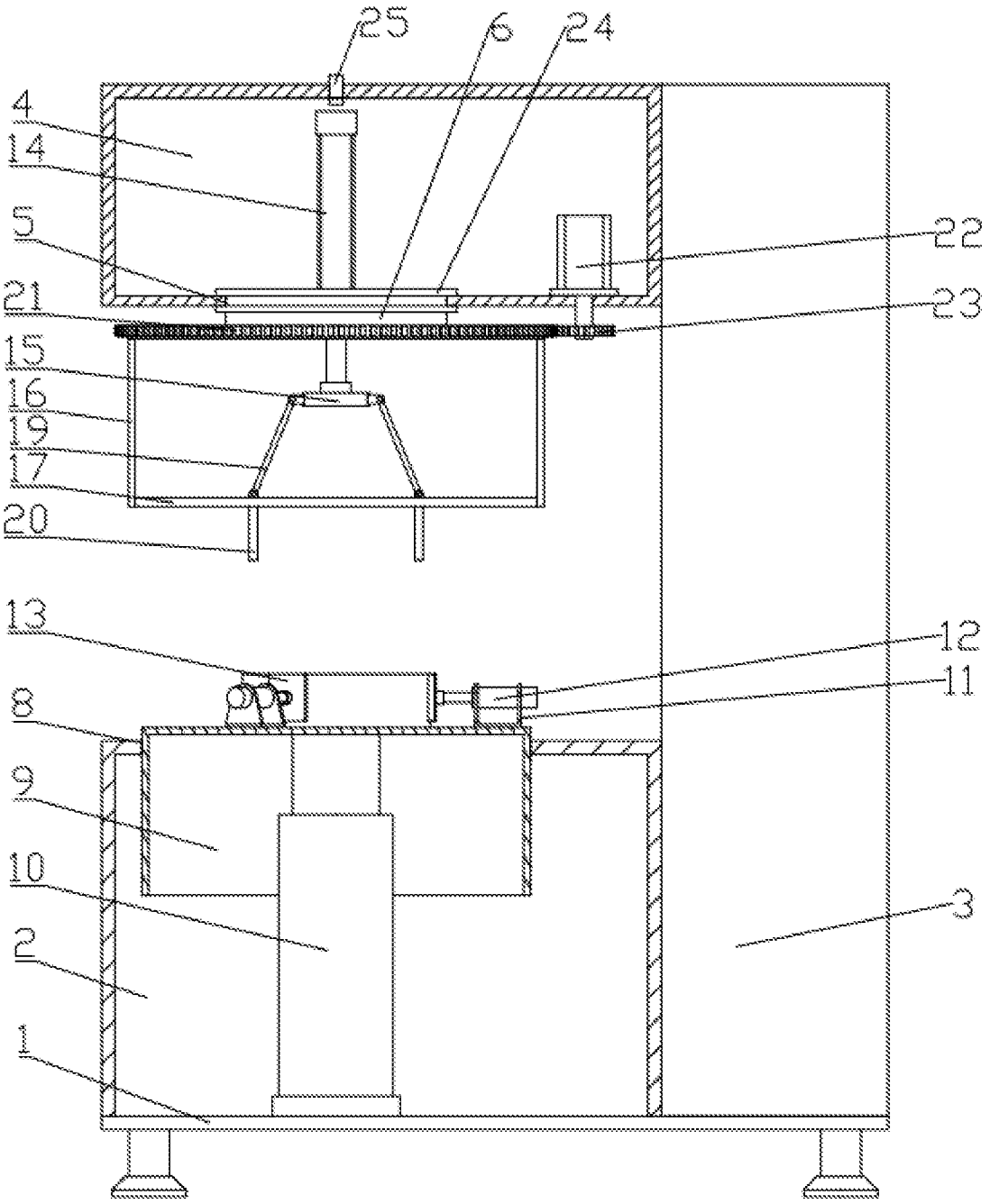

Figure 2

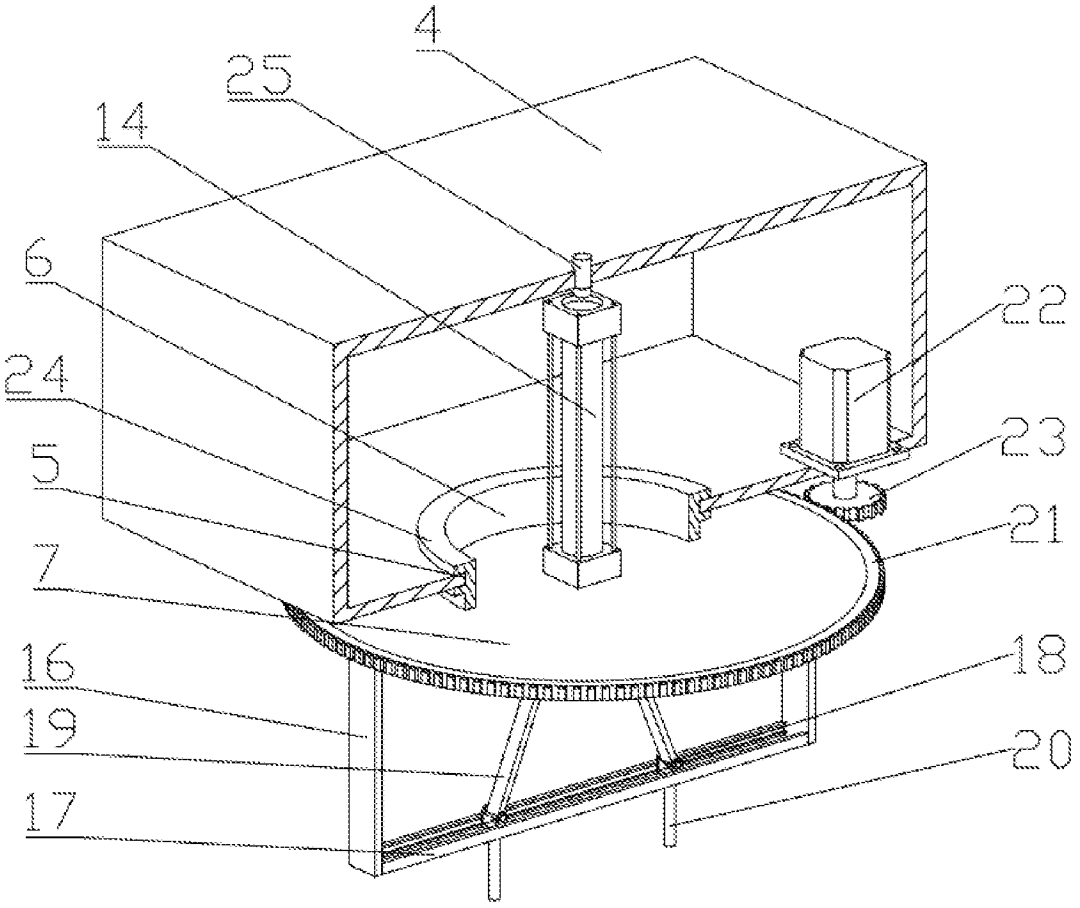

Figure 3

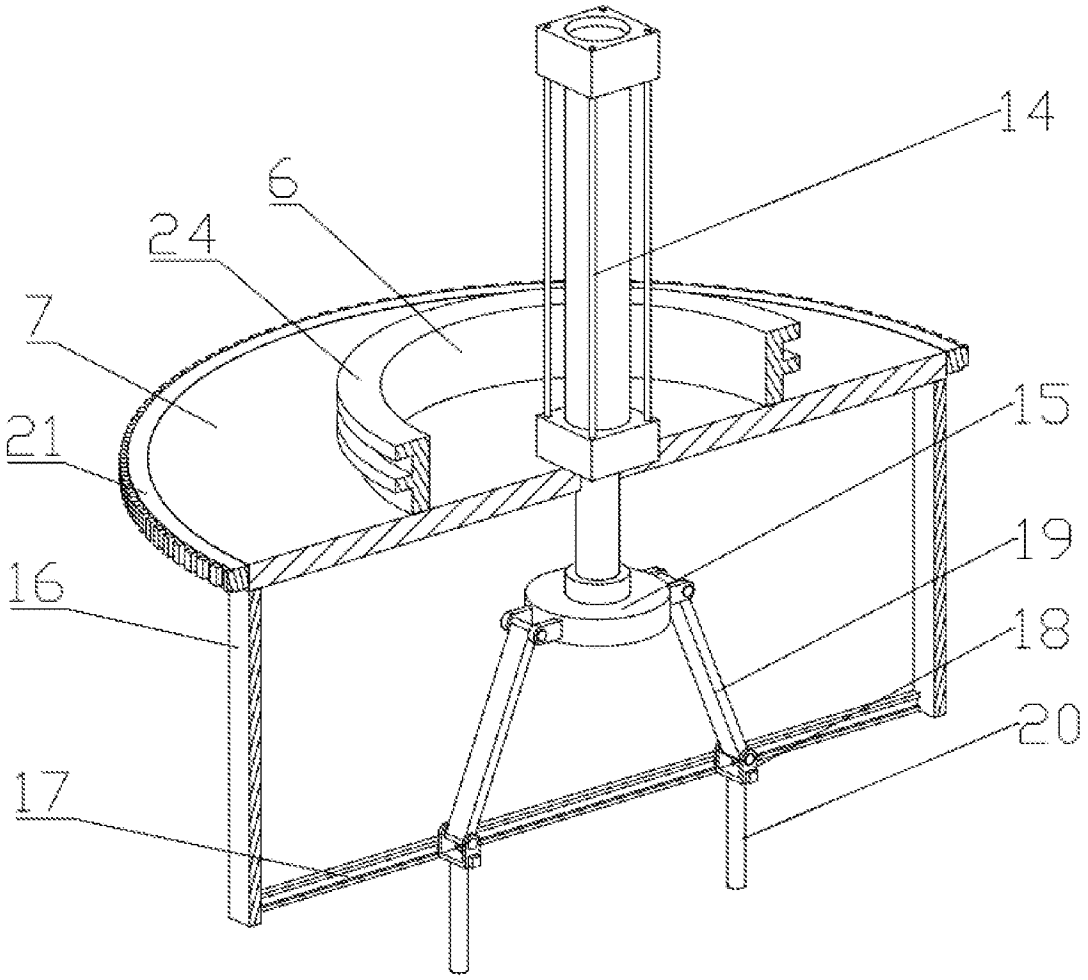

Figure 4