W. W. MUIR.

COOLING SYSTEM.

APPLICATION FILED DEC. 24, 1917.

1,311,528.

Patented July 29, 1919.

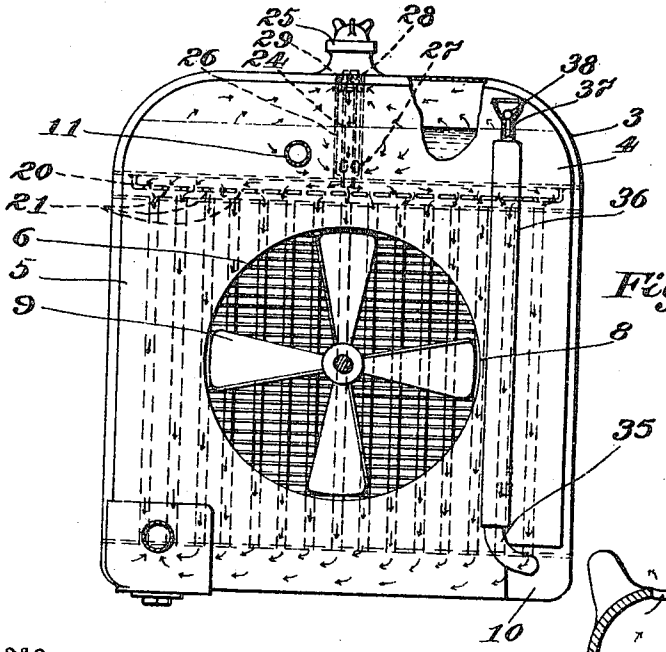

Fig. 1.

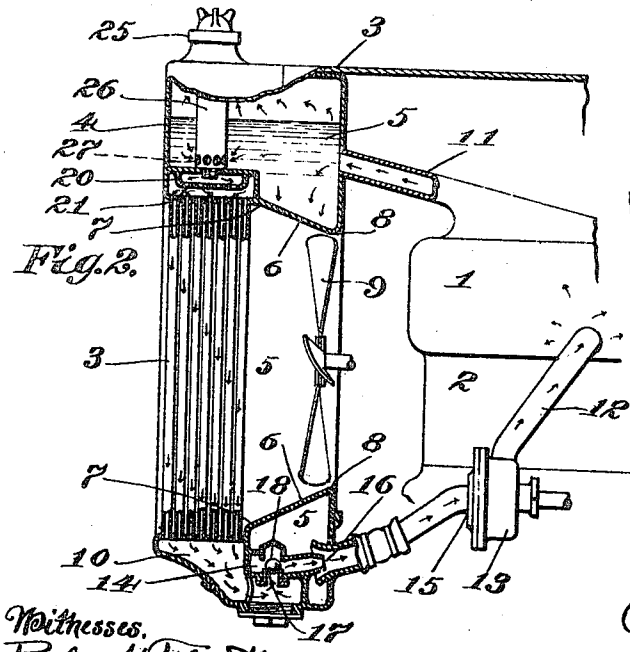

Fig. 2.

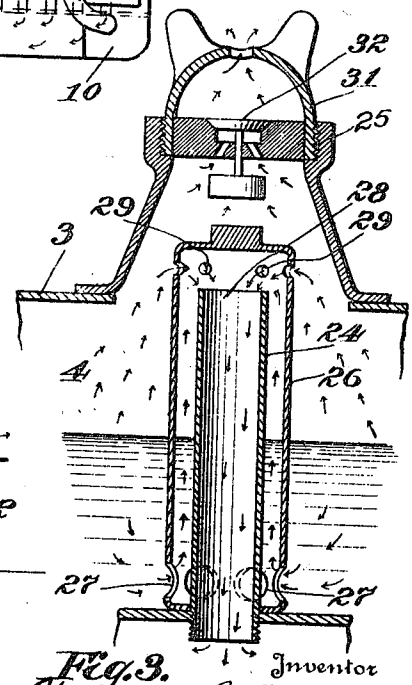

Fig. 3.

Witnesses.
Porter H. Hault.
Alice G. Dougan

Inventor
Wellington W. Muir
By Edwin H. Samuels
Attorney

UNITED STATES PATENT OFFICE.

WELLINGTON W. MUIR, OF BALTIMORE, MARYLAND.

COOLING SYSTEM.

1,311,528. Specification of Letters Patent. Patented July 29, 1919.

Application filed December 24, 1917. Serial No. 208,578.

To all whom it may concern:

Be it known that I, WELLINGTON W. MUIR, a citizen of the United States of America, residing in the city of Baltimore, State of Maryland, have invented certain new and useful Improvements in Cooling Systems, of which the following is a specification.

This invention relates to a circulating system for cooling internal combustion engines, particularly as applied to automobiles, using water or some equivalent liquid as a heat vehicle and including a radiator, a jacket in the cylinder casting and means for passing the water through the jacket and radiator in turn whereby the excess heat taken from the cylinders is distributed through the air by means of the radiator.

In the majority of commercial applications of the water cooling system, there is either a circulating pump which operates continuously and proportionately to the speed of the motor, or dependence for circulation is had upon the thermosiphon or gravity system according to which the expansion of the heated water by reducing its specific gravity causes it to be displaced by the cool water from the radiator. The fact that the temperature of the cylinders which gives most efficient operation is a few degrees below boiling and the disadvantages, particularly loss of efficiency and difficulty in starting, incident to overcooling during the operation of the motor which occurs principally in cold weather, and overcooling during starting after a period of idleness long enough to cool the system and engine castings, are recognized by all operators.

The present invention relates to a cooling system of the general type in that it uses water as a heat vehicle, but new in that it permits very little actual cooling until approximately the temperature of maximum efficiency is reached.

The cooling which then takes place tends to be proportionate to the excess heat generated. This system also has the advantage that any excess size of radiator may be used without loss of the heat necessary to the efficient operation of the engine. At the same time when the full capacity of the radiator is required, it may be utilized to the fullest extent as in the ordinary system.

In the accompanying drawing, I have illustrated a cooling system embodying my invention in what is at present the preferred form. In the drawings,

Figure 1 is a rear view of the radiator, tanks, fan and so forth;

Fig. 2 is a vertical central section; and

Fig. 3 is a detail view of the part or combination of parts referred to hereinafter as the standpipe.

Referring to the drawings by numerals, the illustration includes the water jacket 1 of a cylinder casting 2, a radiator 3 having an upper tank 4 or separator providing a considerable exposed surface for the escape of vapor or steam with an extension 5 shown as covering or hanging down over the rear of the radiator. This overhanging or depending portion may be of any proportions from a mere passage to several gallons capacity. There is also a bottom radiator tank 10 to which the lower ends of the radiator tubes are connected, a top radiator connection 11 leading from the water jacket near the top to the upper part of the tank 4 and the lower connection 12 leading from the bottom tank 10 and lower part of the extension 5 of the tank 4 to the lower part of the water jacket and having therein a circulating means 13 shown in the form of a pump delivering toward the water jacket. Any circulating means may be utilized. The bottom connection includes a pipe or passage 14 leading from the bottom tank 10 to the suction 15 of the pump and preferably terminating in a nozzle 16. As illustrated, this passage 14 is preferably provided with a valve seat 17 with which a non-return valve 18, shown in the form of a ball valve, coöperates, the same opening in the direction of the pump delivery, *i. e.*, toward the bottom of the water jacket. The depending portion 5 of the tank 4 has a funnel-shaped opening 6, the forward end 7 of the funnel being equal in size and conforming to the portion of the rear side of the radiator covered by the tank and the rear end 8 of the funnel being substantially circular and preferably about the diameter of the fan 9. There is a distributer 20 in the form of a flat passage or chamber perforated at the bottom at 21 and of width substantially equal to the width from front to rear of the series of tubes. This distributer carries a member, referred to herein as a standpipe, including an upright pipe 24, open at both ends and threaded or otherwise removably secured to or into the top wall of the distributer 20 near the center so that in the preferred form, the pipe 24 is in line with the filler nozzle 25,

This pipe 24 is inclosed within an outer casing 26 supported thereon. This casing has openings 27 at its bottom end above the top wall of the distributer, leading from the water space in the tank into the casing at the bottom. The casing also extends above the pipe 24 leaving an opening 28 at the top into that pipe from the casing, and the casing is partially closed at the top having perforations 29 near the top. It will thus be noted that the standpipe consists of a pipe opening into the space over the tubes extending up above the water level in the tank where it has openings into the air or steam space from whence it extends beneath the water having openings to admit the water. The circulation through the pipe is opposed to the order in which the parts have just been named, *i. e.*, from the tank into the radiator. As a special precaution, the filler cup 31 should be provided with a weighted or other suitable safety valve 32.

As a means for eliminating back pressure, air and steam locks and the like, from the bottom tank 10, and to thus overcome these obstacles against cooling in case of stoppage of the pump 13, either when the engine stops or from other causes, I may in one form of my invention provide an overflow or vent 35 from the bottom tank 10 of the radiator and to prevent the loss of water, particularly when the pump is idle, I have supplied this vent 35 with a reservoir 36 in the form of an upright pipe or tube of any suitable diameter; according to the proportions shown, it is from one and a half to two inches. This pipe in turn has an outlet 37 with a weighted or other non-return valve 38 above the water level.

This valve 38 prevents the entrance of air and the formation of air locks which would interfere with the operation of the condenser. The outlet 37 of the vent 35, while shown at the top of the radiator, may be at any convenient level high enough to prevent the escape of water. As the pump normally exhausts the condensed liquid from the bottom of the radiator and there is a non-return valve 18 to prevent back-flow of water and to keep the radiator empty when the engine is idle, the level of the vent may be very low without such loss of water.

In the normal operation of the system, when the engine is started cold, there is no circulator through the radiator. With no circulation through the radiator, very little heat is lost. In fact, the only heat given up from the entire system with the exception of what goes out with the exhaust, is that radiated from the jacket and from the tank 4 with its depending extension 5 and the pipes 11 and 12. The path of circulation or circuit of the liquid is from the pump 13 through the pipe or connection 12 to the jacket 1 and from the jacket 1 through the pipe or connection 11 to the separator 4, from the separator tank 4 downward through the rear extension 5, which may be either an extension or a pipe or passage as pointed out, line 70, page 1. From the bottom of this extension or passage, it enters the suction of the pump 13. The suction of the pump also serves to drain the condensed liquid from the bottom tank or water chamber 10 of the condenser or radiator proper 3 which normally receives only vapor from above the liquid in the separator 4, and return the same to the circuit.

After starting with the system cold the water in the jacket quickly approaches the critical temperature or temperature of maximum efficiency which, as already pointed out, is a few degrees below boiling. At this point the water at the top of the tank will reach the boiling temperature or approach it closely enough to give off steam. The steam given off escapes through the openings 28 and 29 into the standpipe, passes down through the radiator where it is condensed, the condensed water being removed by the ejector action of the nozzle 15 in the suction of the pump and delivered by the pump to the bottom of the water jacket. The cooling thus effected is sufficient under ordinary circumstances and serves to keep the cylinder walls at or very close to the temperature of maximum efficiency. When the vaporization in the tank 4, particularly in warm weather, is greater than can be passed through the opening 29, under the circumstances a throttling action results, and the vapor pressure acting on the surface of the water outside the casing 26 of the standpipe becomes greater than the pressure on the water inside the standpipe. Under these circumstances, the water enters the casing 26 through the apertures 27 in response to the excess pressure in the tank and overflows into the pipe 24 being distributed throughout the radiator by the distributer 20, passing downward through the tubes 3 with a resulting cooling effect in excess of that produced by the mere condensation. This may be made equal to the full capacity of the radiator if the proportions of the openings 27, 28 and the standpipe are so determined.

At this point one of the important advantages of the system becomes apparent, that is, the radiator may be made of any desired capacity to take care of extreme conditions but such increase in the radiating surface will not affect adversely the operation of the engine under normal conditions as the cooling will only be sufficient to keep the water jacket about the critical temperature and when an excess of heat is generated, the full capacity of the radiator or the capacity to cool whatever quantity of water may be passed through the openings

27 at the bottom of the standpipe, will be utilized. If the car is to be taken from a cold or temperate to a tropical climate, or subjected to unusually trying conditions where the cooling produced by the atmosphere is at the minimum, the standpipe may be entirely removed by unscrewing at the threaded connection, and the tubes and entire radiator as well as the tank filled with water. This adds about a gallon or a gallon and a half to the water content. If an oversized radiator is used, the cooling system is thus adapted to be changed at half a minute's notice from one suitable to any cold climate to an arrangement adapted to the conditions in the very hottest climate.

The vent 35 from the bottom tank 10 has been provided as a special precaution to prevent back-pressure, air locks, steam locks and the like in the bottom tank 10 on the stoppage of the pump 13 due to stopping of the engine or other causes. The reservoir or pipe 36 if used may be of an inch and a half to two inches capacity. It receives and retains any water which may thus escape from the tank 10 and prevents consequent loss from the system. When the pump starts, this water is exhausted from the reservoir 36 and returned to circulation. At the top, the reservoir 36 terminates in a valve seat 37 closed by a light weight non-return valve 38 to prevent loss of water by splashing and the like and to permit escape of air and steam, and prevent the entrance of outside air through the vent. The water head in the radiator during running is normally zero or practically zero and there is means in the pump suction preventing back-flow of water into the radiator when the engine is idle so that the discharge end of the vent may be at almost any convenient point. Its function is to prevent pressure at the lower part of the system, particularly on the condensed liquid led from the condenser or radiator to the circuit, and it should be so located as to avoid the loss of the liquid.

I have thus described my invention specifically and in detail in order that its nature and operation may be fully understood; however, the specific terms herein are used descriptively rather than in their limiting sense and the scope of the invention is defined in the claims:

1. A cooling system for internal combustion engines consisting of a radiator, a water jacket, a tank extending from the top of the radiator to a point near the bottom of the same, top and bottom connections from the tank to the water jacket, and from the bottom of the radiator to the water jacket, heat-controlled means normally preventing the flow of liquid through the top connection, permitting the flow of vapor and actuated by change of temperature above a certain point to admit liquid through said connection to the radiator, means for preventing back flow of liquid to the bottom of the radiator through the bottom connection.

2. A cooling system for internal combustion engines, consisting of a radiator, a water jacket, a tank extending from the top of the radiator to a point near the bottom of the same, top and bottom connections from the tank to the water jacket, and from the bottom of the radiator to the water jacket, and means in the bottom connection for causing circulation of the water upward through the jacket, heat-controlled means normally preventing the flow of liquid through the top connection, permitting the flow of vapor and actuated by change of temperature above a certain point to admit liquid through said connection to the radiator, means for preventing back flow of liquid to the bottom of the radiator through the bottom connection.

3. In a cooling system for internal combustion engines, a water jacket, a radiator, a tank adapted to maintain a supply of liquid higher than the radiator, a passage open at both ends, having one end normally submerged in the water in the tank and the other end leading into the top of the radiator, an intermediate portion of the passage being above the level of the water in the tank and having a constricted opening communicating with the air space in the tank, a top connection between the water jacket and tank, and a bottom connection between the water jacket and radiator and tank.

4. A cooling system for internal combustion engines consisting of a radiator having a radiating member, a water jacket, a partition separating the space over the radiating member from the top tank of the radiator, the tank extending downward to the lower part of the radiator, connections from the tank to the top and bottom of the jacket, a standpipe opening through said partition, a passage opening into the water space of the tank near said partition, extending up to the top of the standpipe, and having perforations near the top of said standpipe above the normal water level, and a water space at the bottom of the radiator connected to the tank.

5. A cooling system for internal combustion engines consisting of a radiator, a water jacket, a tank at the top of the radiator, top and bottom connections between the water jacket and the tank, a standpipe in the tank opening downward into the radiator and having its upper end above the normal water level in the tank, a passage having its lower end open and submerged in the water in the tank communicating with the top end of the standpipe and having an opening near its top into the air space in the tank.

6. A cooling system for internal combus-

tion engines consisting of a radiator, a water jacket, a tank at the top of the radiator, top and bottom connections between the water jacket and the tank, a standpipe in the tank opening downward into the radiator and having its upper end above the normal water level in the tank, a passage having its lower end open and submerged in the water in the tank communicating with the top end of the standpipe and having an opening near its top into the air space in the tank, the standpipe and passage being conveniently removable.

7. In a cooling system for internal combustion engines, including a radiator, a water jacket, top and bottom connections, the radiator including a bottom tank and a vent leading from the bottom tank to a point above the level of the water in the system, said vent including a reservoir.

8. In a cooling system for internal combustion engines, including a radiator, a water jacket, top and bottom connections, the radiator including a bottom tank and a vent leading from the bottom tank to a point above the level of the water in the system, the vent being provided with a reservoir and a non-return valve above the water level.

9. In a cooling system for internal combustion engines, a radiator, a water jacket, a tank at the top of the radiator, top and bottom connections from the jacket to the tank, a partition forming a space at the top of the radiator over the tubes, a standpipe extending through the partition connecting this space above the tubes with the space in the tank above the water level, the standpipe being open at both ends, a pipe inclosing the standpipe leading from a point below the water level where it has an opening to the top of the standpipe and having a constricted opening to the air space in the tank at or near the latter point, and means for leading water from the bottom of the radiator and putting it into circulation.

10. In a circulating system including a radiator, a water jacket, a tank over the radiator, a standpipe being the only connecting passage between the tank and radiator, said passage having one opening beneath the water in the tank, extending above the normal water level in the tank where it has a restricted inlet from the air or steam space in the tank, the other or discharge end of the passage opening into the radiator at the top and suitable connections leading from the water jacket to the tank and from the tank and radiator to the water jacket.

11. In a circulating system including a radiator, a water jacket, a tank over the radiator, a standpipe being the only connecting passage between the tank and radiator, said passage having one opening beneath the water in the tank, extending above the normal water level in the tank where it has a restricted inlet from the air or steam space in the tank, the other or discharge end of the passage opening into the radiator at the top and suitable connections leading from the water jacket to the tank and from the tank and radiator to the water jacket, and a non-return valve in the passage leading from the bottom of the radiator.

12. In a circulating system including a radiator, a water jacket, a tank over the radiator, a standpipe being the only connecting passage between the tank and radiator, said passage having one opening beneath the water in the tank, extending above the normal water level in the tank where it has a restricted inlet from the air or steam space in the tank, the other or discharge end of the passage opening into the radiator at the top and suitable connections leading from the water jacket to the tank and from the tank and radiator to the water jacket, a non-return valve in the passage leading from the bottom of the radiator, and circulating means taking water from the bottom of the tank and radiator and delivering it to the water jacket.

13. In a cooling system for internal combustion engines, a continuous circuit for the fluid, including a jacket and a separator for separating the vapor from the fluid, a radiator having a core to act as a condenser, the separator forming the top tank of the radiator, a distributer beneath the separator and on top of the radiator core, a connection leading from the upper portion of the separator to the distributer, and means for returning the condensed liquid to the circuit.

14. In a cooling system for internal combustion engines, a continuous circuit for the fluid, including a jacket and a separator for separating the vapor from the fluid, a radiator having a core to act as a condenser, the separator being in the position occupied by the top tank in the present radiators, means leading vapor from the separator to the condenser, and means for passing the liquid continuously through the circuit and returning the condensed liquid to the circuit.

15. In a cooling system for internal combustion engines, a radiator, a continuous circuit for cooling fluid including a jacket for the combustion chamber of the engine, connections between the radiator and circuit, means excluding the liquid from the radiator when the cooling medium is below a predetermined temperature, and permitting it to enter the radiator above that temperature.

16. In a cooling system for internal combustion engines, a radiator, a continuous circuit for cooling fluid including a jacket for the combustion chamber of the engine, connections between the radiator and circuit, means excluding the liquid from the

radiator when the cooling medium is below a predetermined temperature and permitting it to enter the radiator above that temperature, and means for removing liquid from the radiator and introducing it into the circuit.

17. In a cooling system for internal combustion engines, a radiator, a continuous circuit for cooling fluid including a jacket, means for separating vapor from liquid, heat-controlled means excluding liquid from the radiator below a predetermined temperature and admitting liquid above that temperature, means for removing liquid from the radiator and introducing it into the circuit, and means for preventing back flow through said latter means from the circuit to the radiator.

18. In a cooling system for internal combustion engines, a radiator, a continuous circuit for cooling liquid and means for separating vapor from the liquid, means normally excluding liquid from the radiator consisting of a heat-controlled connection which admits vapor to and excludes liquid from the radiator below a certain predetermined temperature and admits liquid above said temperature, means for removing liquid from a low point in the radiator and returning it to the circuit, and means for preventing back flow from the circuit through said means to the said point of the radiator.

19. In a cooling system for internal combustion engines, a radiator, a continuous circuit for cooling liquid including a jacket and a vapor space, a connection from the vapor space to the radiator, a small orifice controlling said connection, permitting the vapor formed below a predetermined critical temperature to pass freely and serving to back up the vapor above said predetermined temperature and increase the pressure on the liquid, a connection from beneath the surface of the liquid in the circuit to the radiator whereby as the pressure on the liquid is increased, the liquid is caused to flow through the radiator, and means for removing liquid from a low point in the radiator and returning it to the circuit.

20. In a cooling system for internal combustion engines, a radiator, a continuous circuit for cooling liquid, including a jacket and a vapor space, a connection from the vapor space to the radiator, a small orifice controlling said connection permitting the vapor formed below a predetermined critical temperature to pass freely and serving to back up the vapor above said predetermined temperature and increase the pressure on the liquid, a connection from the liquid in the circuit to the radiator whereby, as the pressure on the liquid is increased, the latter is caused to flow through the radiator.

21. In a cooling system for internal combustion engines, a radiator, a continuous circuit for cooling liquid, including a jacket, a separator having a vapor space, a connection from the vapor space to the radiator, a small orifice controlling said connection permitting the vapor formed below a predetermined critical temperature to pass freely and serving to back up the vapor above said predetermined temperature and increase the pressure on the liquid, a connection from the liquid in the circuit to the radiator whereby, as the vapor pressure in the circuit on the liquid is increased, the latter is caused to flow through the radiator, means for removing liquid from a low point in the radiator and returning it to the circuit, and means for preventing back flow of the liquid from the circuit through said last-named means.

Signed by me at Baltimore, Maryland, this 11 day of December, 1917.

WELLINGTON W. MUIR.

Witnesses:
ZELLA KUHN,
ALICE G. DONEGAN.