(12) INTERNATIONAL APPLICATION PUBLISHED UNDER THE PATENT COOPERATION TREATY (PCT)

(19) World Intellectual Property Organization
International Bureau

(43) International Publication Date
23 March 2006 (23.03.2006)

PCT

(10) International Publication Number
WO 2006/029481 A2

(51) International Patent Classification: Not classified

(21) International Application Number:
PCT/AU2005/001429

(22) International Filing Date:
16 September 2005 (16.09.2005)

(25) Filing Language: English

(26) Publication Language: English

(30) Priority Data:
2004905348 17 September 2004 (17.09.2004) AU

(71) Applicant *(for all designated States except US)*: **CUMMINSCORP LIMITED** [AU/AU]; 16-18 Kingston Drive, Gaven, Gold Coast, Queensland 4211 (AU).

(72) Inventor; and

(75) Inventor/Applicant *(for US only)*: **CUMMINS, Ian Geoffrey** [AU/AU]; 16-18 Kingston Drive, Gaven, Gold Coast, Queensland 4211 (AU).

(74) Agent: **GARDNER, John R G**; Suite 398, 15 Albert Avenue, Broadbeach, Gold Coast, Queensland 4218 (AU).

(81) Designated States *(unless otherwise indicated, for every kind of national protection available)*: AE, AG, AL, AM, AT, AU, AZ, BA, BB, BG, BR, BW, BY, BZ, CA, CH, CN, CO, CR, CU, CZ, DE, DK, DM, DZ, EC, EE, EG, ES, FI, GB, GD, GE, GH, GM, HR, HU, ID, IL, IN, IS, JP, KE, KG, KM, KP, KR, KZ, LC, LK, LR, LS, LT, LU, LV, LY, MA, MD, MG, MK, MN, MW, MX, MZ, NA, NG, NI, NO, NZ, OM, PG, PH, PL, PT, RO, RU, SC, SD, SE, SG, SK, SL, SM, SY, TJ, TM, TN, TR, TT, TZ, UA, UG, US, UZ, VC, VN, YU, ZA, ZM, ZW.

(84) Designated States *(unless otherwise indicated, for every kind of regional protection available)*: ARIPO (BW, GH, GM, KE, LS, MW, MZ, NA, SD, SL, SZ, TZ, UG, ZM, ZW), Eurasian (AM, AZ, BY, KG, KZ, MD, RU, TJ, TM), European (AT, BE, BG, CH, CY, CZ, DE, DK, EE, ES, FI, FR, GB, GR, HU, IE, IS, IT, LT, LU, LV, MC, NL, PL, PT, RO, SE, SI, SK, TR), OAPI (BF, BJ, CF, CG, CI, CM, GA, GN, GQ, GW, ML, MR, NE, SN, TD, TG).

Published:
— *without international search report and to be republished upon receipt of that report*

For two-letter codes and other abbreviations, refer to the "Guidance Notes on Codes and Abbreviations" appearing at the beginning of each regular issue of the PCT Gazette.

(54) Title: MODULAR AQUACULTURE SYSTEM

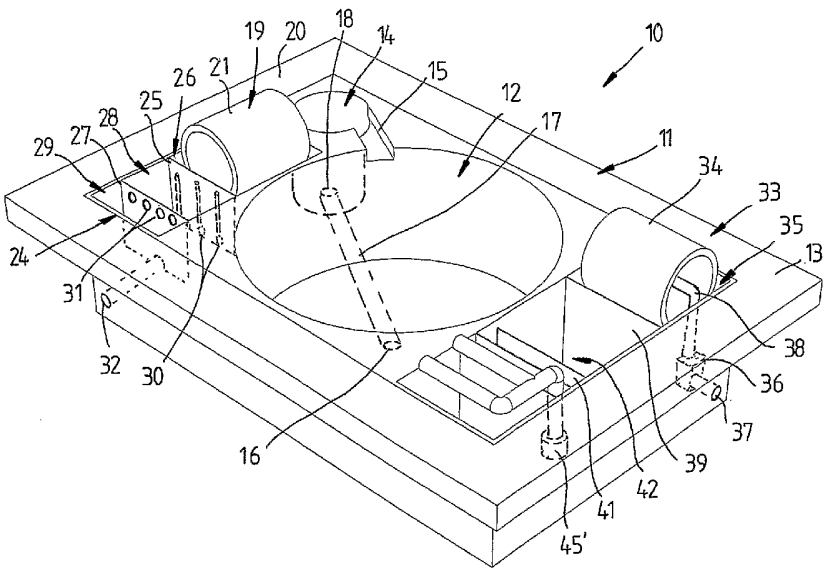

(57) Abstract: Aquaculture apparatus (10) comprising a main body (11) having a main chamber (12) for containing fish, crustaceans or other fresh water or marine invertebrates and buoyant support means (13) which buoyantly supports the main body (11) on a body of water. Water treatment means which may include a drum filter (19,34), an ultraviolet treatment chamber (28,42) and ozone treatment chamber (29,40) are provided for treating water for supply of water from the body of water to the main chamber (12) and return of water from the main chamber (12) to the body of water. The water treatment means may be provided additionally or alternatively on a separate floating platform or structure and the main chamber may be in the form of an endless channel.

WO 2006/029481 A2

MODULAR AQUACULTURE SYSTEM

Technical Field.

This invention relates to a modular aquaculture system and apparatus. In a particular aspect, the present invention relates to an aquaculture apparatus which is designed to float on a body of water but which may also be land based.

Background Art

Many different forms of aquaculture systems are current in use for growing fish on land based establishments. Fish can be grown in either purpose built dams or in tanks or the like contained within an enclosed building. Whist some of these systems have been relatively successful, they are not suitable for many species of fish particularly larger fish such as tuna.

Fish accordingly are also now grown in fish farms in the sea or other body of water. In such farms, fish are usually contained within a floating cage or netting in a natural body of water. Whilst in farms of this type, the fish are exposed to more natural conditions than those which occur in land-based aquaculture systems there are a number of disadvantages of fish farms of this type which makes them environmentally unsuitable in many situations. For example, pollution of the sea bed beneath the fish farm can occur through fish faeces and uneaten food which is discharged directly into the sea which can result in pollution such as algal blooms. Furthermore, disease or parasites from the caged fish can be introduced into the wild stock of fish. In addition, there also can be an impact on wild fish stocks which, in the case where carnivorous fish are grown in fish cages, are required to be harvested to be fed to the farmed fish. Fish cages or netting can also be a cause of death of other marine animals such as dolphins, whales or turtles which can become entangled in the fish net or cage.

Summary of the Invention

The present invention aims to provide aquaculture apparatus in which fish can be grown in or on a naturally occurring or other body of water which overcomes or minimizes the disadvantages of known fish farms. The aquaculture apparatus of the present invention however whilst particularly suited for use on a body of water may also be land based. Other objects and advantages of the invention will become apparent from the following description.

The present invention thus provides aquaculture apparatus comprising a main body having a chamber for containing fish, crustaceans or other fresh water or marine invertebrates and means for buoyantly supporting said main body in or on a body of

water. The body of water may comprise the ocean, a pond or dam or river or any other body of water. The apparatus also suitably includes water treatment means for treating water for supply to the main chamber from the body of water. The apparatus also suitably includes water treatment means for treating water for return from the main chamber to the body of water.

The water treatment means may comprise water treatment means supported on or to the main body. The water treatment means however may comprises or include water treatment means separate from the main body.

The water treatment means includes one or more screen filters. The one or more screen filters may comprise rotatable drum filters. The water treatment means may further include a water treatment chamber for exposing water to be treated to ozone. The water treatment means may include a water treatment chamber containing at least one ultraviolet treatment unit for exposing water to be treated to ultraviolet light. The water treatment means may include a water treatment chamber in which water to be treated to bubbles of gas or air to separate impurities from the water.

The water treatment means may include one or more biological filters. One biological filter may be adapted to remove phosphates from the water. A further biological filter is adapted to remove ammonia and nitrites converted from the ammonia from the water. The water treatment means may comprise a combination of two or more of the above water treatment components.

The water treatment means may also include one or more swirl chambers.

Suitably the water treatment chambers are defined by a single tank. The tank may be divided into a plurality of water treatment chambers by one or more baffles.

The tank may include a series of tank parts, each tank part being divided into a pair of water treatment chambers by a baffle. A baffle may define a weir over which water flows from one chamber to the other chamber. Alternatively walls of the adjacent tank parts may be joined with the upper joined edges defining a weir over which water flows from one tank part to the next. A baffle alternatively may have openings in a lower portion thereof through which water may flow from one chamber to the next chamber. Alternatively, an opening between adjacent chambers is defined beneath a baffle.

The main chamber may comprise in one form an open topped chamber arranged centrally of the main body.

The main body may be formed of a buoyant material to define said buoyant

support means. Alternatively, the buoyant support means may include a separate buoyant body or bodies fixed to and suitably surrounding the main body.

In another preferred form, the main chamber may comprise an endless channel. The channel suitably comprises a peripherally extending channel. The channel may be defined by a plurality of releasably interconnected channel elements. In this form, the buoyant support means may comprise one or more buoyant bodies on the outside of the channel. The buoyant body or bodies may extend around the periphery of the channel elements.

At least the main chamber is preferably adapted to be covered by a cover to define an enclosed air space over the chamber. Means may be provided for controlling the temperature in the enclosed air space.

A biological filter of the water treatment apparatus may receive water from a screen filter for biological treatment of filtered water. The biological filter may include a chamber which receives water from the screen or drum filter. The drum filter suitably comprises a rotatable drum filter having a drum and a screen or mesh material about the periphery of the drum and means are provided for conveying water to the drum filter. Suitably means are provided for rotatably supporting the drum. Means are also suitably provided for rotating the drum. Such means may comprise motor means for causing rotation of the drum. Preferably however the drum is driven in rotation by water flowing into the drum. Preferably water is supplied to the interior of the drum. The drum filter is suitably of the type disclosed in our aforementioned International patent application. Other forms of drum filter however may be employed.

Means may be provided for cleaning the screen or mesh material of the drum. The means for cleaning the screen or mesh material may include means for spraying water and/or applying pressurized air onto the screen or mesh material. Suitably means within the drum are provided for collecting materials cleaned from the screen or mesh material. The means for collecting the material may comprise a trough or channel supported within the drum. The trough or channel may be associated with the supply pipe to the drum. Alternatively, the trough or channel may be supported on a mobile carriage or carriages which cooperate with the drum for rotation relative thereto. The trough or channel may directed collected material to any suitable location such as a collection container or chamber.

Water may be supplied to the screen filter directly from the main chamber.

Alternatively, water may be supplied to the screen filter from a primary filter which receives water from the main chamber. The primary filter may comprise a swirl chamber. The primary filter may receive water and entrained solids from the upper level of water in the main chamber. The primary filter may also receive water and entrained solids from the base of the main chamber.

One or more ozone reactors or generators may be provided for supplying ozone to water to be treated. Preferably the water to be treated with ozone is supplied to one or more water treatment chambers from the drum filter. Ozone from the ozone reactor/s or generator/s may be supplied to the lower end of the chamber to bubble upwardly through that chamber. Ozone may be supplied to an air or gas block submerged in the chamber. Other sources of ozone however may be provided for supply to the chamber.

The ultraviolet treatment chamber may have an inlet for receipt of water to be treated and an outlet for treated water. The inlet may be connected to an ozone treatment chamber and the outlet may be provided for returning water to the body of water being treated. Alternatively, the ultraviolet treatment chamber may receive water from the drum filter. The inlet may be at the lower end of the chamber for receipt of water to be treated and the chamber suitably contains one or more ultraviolet light sources. An outlet from the ultraviolet treatment chamber is suitably provided at an upper portion of the ultraviolet treatment chamber. Alternatively the inlet and outlets to the ultraviolet treatment chamber may be positioned in alternative locations in the ultraviolet treatment chamber.

Means may also be provided for supplying air to a lower portion of the ozone treatment chamber for bubbling through water therein so that the chamber acts as a foam fractionator. Air may be supplied to one or more air blocks in the lower portion of the chamber. An inlet for water to be treated is suitably provided at the upper or lower end of the chamber. An outlet from the chamber is suitably provided at the lower or upper end of the chamber. The foam fractionator however may comprise a separate chamber.

The chamber of the foam fractionator suitably includes a trap or skimmer member at or adjacent the upper level of water in the chamber for collecting waste entrained in bubbles at the surface of the level of water. The trap member or skimmer is suitably connected to waste for example a waste line. The skimmer or trap member may be adjustably supported for height variations within the chamber of the foam fractionator. Alternatively, the skimmer or trap member may be supported by a float or floats at or

adjacent the level of water in the foam fractionator chamber.

In another form, the water treatment apparatus includes at least two ultraviolet treatment chambers and/or ozone chamber arranged in series. Preferably the outlet of the first ultraviolet treatment chamber is connected to an inlet of the zone chamber and an outlet of the ozone chamber is connected to an inlet of the second ultraviolet treatment chamber. A series of ozone chambers and associated ultraviolet treatment chambers may be connected in this manner.

The screen filter for treating water exiting the main chamber may have a filter material of a different mesh or aperture size from the screen filter at the inlet to the water chamber.

The one or more biological filters may be provided before or after the ultraviolet treatment chamber or chambers, ozone treatment chamber or chambers or foam fractionator chamber or chambers. Each biological filter suitably comprises a tank having one or more outlets through which water may flow under the influence of gravity.

The main body may be of any configuration and formed of lightweight concrete, a foam plastics material or any other material.

Water for supply to the main chamber in which the fish or invertebrates are grown may be supplied directly from the body of water. Water may be pumped from the body of water to the main chamber.

Alternatively water for supply to the main chamber may be treated before supply to the main chamber. Thus the aquaculture apparatus may operate in polluted water.

The means for treating water for supply to the main chamber may be of the above described type and arranged separately from the main body and include one or more screen filters, one or more ozone treatment chambers and one or more ultraviolet treatment chambers. The water treatment means may also include one or more biological filters.

The main chamber may be in many different configurations. In one form the main chamber may be of a circular configuration. In each case, the main chamber comprises a closed base chamber which holds water within itself for the growing of fish etc therein.

The present invention provides in a further preferred aspect, aquaculture apparatus comprising a main chamber for containing fish, crustaceans or other fresh water or marine invertebrates, and characterized in that said chamber comprises an

endless channel. Water treated in the channel may be treated by water treatment apparatus of the above described type. The channel may be form by a plurality of interconnected elements which may be disconnected for transport purposes. The channel may be formed in or comprise a main body of the apparatus. The main body may be buoyant or be supported by a buoyant body whereby the apparatus may float on a body of water. Alternatively the main body may be located on land.

In yet a further aspect, the present invention provides aquaculture apparatus adapted for floatation on a body of water and comprising a chamber for containing fish, crustaceans or other fresh water or marine invertebrates, first water treatment means for treating water from said body of water for supply to said chamber, and second water treatment means for treating water from said chamber for return to said body of water. The water treatment means may in any of the forms described above and the chamber may be defined by a tank like body or comprise a channel such as an endless channel.

Brief Description of the Drawings

In order that the invention may be more readily understood and put into practical effect reference will now be may to the company drawings which illustrate the preferred embodiments of the invention and wherein:

Figs. 1 and 2 illustrates schematically in opposite isometric views a floating aquaculture apparatus according to a first embodiment of the invention;

Fig. 3 is an enlarged underside view of the apparatus of Figs. 1 and 2;

Figs. 4 and 5 illustrates schematically in opposite isometric views a floating aquaculture apparatus according to a second embodiment of the invention;

Figs. 6 and 7 illustrates schematically in opposite isometric views a floating aquaculture apparatus according to a third embodiment of the invention;

Fig. 8 illustrates the apparatus of Figs. 6 and 7 provided with a cover;

Fig. 9 illustrates schematically in isometric view a floating aquaculture apparatus according to a further embodiment of the invention;

Fig. 10 and 11 illustrates schematically in opposite perspective views the floating aquaculture apparatus of Fig. 9 with the top cover removed;

Fig. 12 illustrates schematically the main chamber or channel of the aquaculture apparatus of Figs. 9 to 11;

Fig. 13A illustrates a section of the main chamber of Fig. 12;

Fig. 13B illustrates a joiner for joining components of the channel elements of the

aquaculture apparatus of Figs. 9 to 18;

Figs. 14 and 15 illustrate schematically in perspective views a further embodiment of aquaculture apparatus with and without a chamber cover;

Fig. 16 is an opposite schematic isometric view of the apparatus as depicted in Fig. 15;

Figs. 17 and 18 illustrates schematically in opposite isometric views a floating aquaculture apparatus according to a further embodiment of the invention;

Fig. 19 illustrates in isometric view a floating aquaculture assembly including the aquaculture apparatus of Figs. 1 and 2 associated with floating water treatment apparatus and a power supply;

Fig. 20 illustrates the assembly of Fig. 19 provided with covers over the aquaculture apparatus and water treatment apparatus;

Fig. 21 is a plan view of one of the water treatment apparatus of Figs. 19 and 20;

Fig. 22 is an enlarged sectional view along line A-A of the water treatment apparatus of Fig. 21;

Fig. 23 illustrates a further aquaculture assembly according to the present invention; and

Figs. 24 and 25 illustrate a further aquaculture assembly in views similar to that of Figs. 22 and 23 but including the apparatus of Figs. 9 to 12.

Detailed Description of the Preferred Embodiments

Referring to the drawings and firstly to Figs. 1 and 2, there is illustrated aquaculture apparatus 10 according to an embodiment of the invention comprising a main body 11 which may be formed of plastics or other materials and which has a centrally located main chamber 12 in the nature of an open topped tank formed integrally therein for containing water in which fish or fresh water or marine invertebrates are held. The main body 11 further includes or is fixed to a peripherally extending buoyant collar 13 for buoyantly supporting the apparatus 10 in a body of water. The buoyant collar 13 may be formed of a buoyant material or contain a buoyant material or alternatively may comprise one or more sealed air chambers. A swirl chamber 14 comprising part of water treatment apparatus is also formed integrally in the main body 11 adjacent the main chamber 12. The main chamber 12 communicates with the swirl chamber 14 by means of a spillway 15 whereby water and solid including particulate materials floating at or adjacent the upper level of water in the chamber 12 can flow into the swirl chamber 14.

A drain outlet 16 is provided in the base of the main chamber 12, the drain outlet 16 being connected through a drain line 17 (see also Fig. 3) to an inlet 18 the base of the swirl chamber 14 whereby faeces or other solids such as uneaten food gathering in the base of the main chamber 12 may flow into the swirl chamber 14.

Supported on the main body 11 adjacent the swirl chamber 14 is a drum filter 19 which is of similar configuration to the drum filter disclosed in our international patent application No. PCT/AU02/01245 and which comprises a drum 20 which is supported externally on rollers. The drum 20 has screen or mesh material 21 around the periphery thereof and is driven from rotation by water flowing into the interior thereof. For this purpose, the drum 20 includes a plurality of internal circumferentially spaced members with which water flowing into the interior of the drum 20 cooperates to effect rotation of the drum 20.

Water is supplied to the interior of a drum 20 via a supply duct 22 extending from an upper portion of the swirl chamber 14 through a spillway 23 therein. Thus water flows under the influence of gravity from the main chamber 12 to the swirl chamber 14 and from the swirl chamber 14 into the drum 21. A water spray bar or air tube (not shown) is provided above the drum 20 for spraying water and/or applying a blast of air to the screen material 21 of the drum 20 to displace materials from and thereby clean the screen material of the drum 21.

The drum 20 is supported above a tank 24 which is open on its upper side and closed on its lower side and divided by a baffle 25 into a first chamber 26 over which the drum 20 is supported. Thus water filtered through the drum 20 is received in the chamber 26. A trough or channel (not shown) in the drum 20 traps materials displaced from the screen material 21 and the trough or channel may lead to a waste collection container. The chamber 26 also carries a biological filter media for carrying bacteria biological treatment of water in the chamber 26 for removing ammonia and/or nitrites from the filtered water. A further baffle 27 divides the tank 24 into two further chambers 28 and 29.

The lower portion of the baffle 25 is provided with openings or slots 30 or the baffle 25 may be raised above the base of the tank 24 so that water in the chamber 26 which has been filtered by the drum filter 19 and subject to the bacteria carried by the biological filter media can pass therethrough or thereunder into the chamber 28.

The chamber 28 includes one or more ultraviolet light sources (shown in dotted

outline) to which the water in the chamber 28 is exposed in its passage upwardly through the chamber 28.

The baffle 27 is provided with openings 31 adjacent it upper end so that water can flow under the influence of gravity into the chamber 29 when the water in the chamber reaches a certain height. Alternatively the baffle 27 may be formed so as not to extend to the full height of the tank 24 so that the upper edge of the baffle 27 defines a weir over which water in the chamber 28 can flow into the chamber 29. Water flowing into the chamber 29 is exposed to ozone and for this purpose means are provided for introducing ozone into the water in the chamber 29. Such means may include one or more ozone outlets for example air stones at a lower portion of the chamber 29 and connected to a source of ozone which bubbles upwardly through the water flowing into the chamber 29 for sterilizing the water. Alternatively or additionally air may also be introduced into the chamber 29 to bubble through the water therein so that the chamber 29 acts as a foam fractionator to remove impurities in the water.

The chamber 29 has, or communicates at its lower end with, an outlet 32 through which treated water flows back into the body of water in which the apparatus 10 is floating. Water flowing into the outlet 32 may be filtered in any suitable mechanical filter to trap solids and prevent solids from entering the body of water.

Water may be supplied from the body of water in which the apparatus 10 is floating directly such as by a submergible pump or other pump supported on the main body 11 and communicating with the body of water. Alternatively the water may be treated prior to entry into the main chamber 12 by water treatment apparatus 33 which treats the water in a similar manner to water exiting the chamber 12.

The apparatus 33 includes a drum filter 34 which is supported over a chamber 35 which contains a biological filter media carrying bacteria. Water is supplied to the interior of the drum filter 34 by a pump 36 communicating with the body of water through the inlet 37 such that the pump 36 can pump water through the supply line 38 into the drum filter 34. As in the drum filter 19, water flowing into the drum filter 34 causes rotation of the drum. The water filtered through the drum filter 19 is exposed to the bacteria biological filter media in the chamber 35 to remove ammonia and nitrites or alternatively or additionally to remove phosphates.

Water from the chamber 35 flows under the baffle 39 or through apertures in a lower portion thereof (similar to the apertures 30) into the chamber 40 in which the water

is subject to ozone in a similar manner as described above. Water flows over baffle 41 at one side of the chamber 40 into a further chamber 42 where the water is subject to ultraviolet light also in a similar manner to that described above. Water flows beneath a further baffle 43 or through apertures in a lower portion thereof (similar to the apertures 30) into a collection chamber 44. Water collecting in the chamber 44 is pumped through pipeline 45 which terminates in a pump 45' into spray bars 46 through which water is sprayed into a second biological filter chamber 47 containing a biological filter media carrying bacteria for removing ammonia and nitrites or alternatively or additionally phosphates from the water.

An inlet 48 in the base of the chamber 12 communicates with the base of the chamber 47 so that treated water in the chamber 47 is supplied to the main chamber 12. Water in the main chamber 47 may be subject to ozone prior to supply to the chamber 12.

The above described arrangement permits the apparatus 10 to operate in a polluted body of water with water from the body of water being treated in the apparatus 33 before supply to the chamber 12 and water in the chamber 12 being treated before return to the body of water. If required a cover may be provided over the apparatus 10 to prevent escape of fish or other marine animals in the chamber 12 or exposure of the apparatus 10 to the elements and/or to control the temperature of the water in the chamber 12. Temperature control however may not be necessary as the temperature of water in the chamber 12 is substantially the same as the temperature of the body of water in which the apparatus 10 is floating.

Whilst the apparatus 10 is particularly designed for floating on a body of water, it may alternatively be land based. In this case of course, the flotation collar 13 is not required. Water however for use in the chamber 12 may be treated by the apparatus 33 by connecting the apparatus 33 to a suitable supply of any water.

Referring now to Figs. 4 and 5 there is illustrated an alternative embodiment of aquaculture apparatus 50 according to the present invention which is similar in principle to the apparatus of Figs. 1 to 3 and like components to the embodiment of Figs. 1 to 3 have been given like numerals. In this case however, the water treatment apparatus 51 for treatment of water for supply to the chamber 12 after passing into the drum filter 19 is supplied to an enlarged biological filter chamber 52 containing a biological filter medium supporting bacteria by supply line 53 and pump such a submergible pump. Water after being treated in the chamber 52 flows back through outlets 54 into the chamber 55 where

it flows over the weir 56 downwardly into an ultraviolet treatment chamber 57 in which the water is subject to ultraviolet light by a suitable ultraviolet light source or sources in the chamber 57 (shown in dotted outline in Fig. 5).

Water from the chamber 57 flows through an opening or openings at the base of the chamber 57 or a wall of the chamber 57 into an ozone treatment chamber 58 to be subject to ozone which is bubbled therethrough as above. Outlets 59 at an upper level of the chamber 57 returns the treated water to inlets 60 to the chamber 12 to supply the chamber 12 with treated water.

The apparatus 61 of Figs. 6 and 7 is similar to the apparatus 50 of Figs. 4 and 5 however in this case the water exiting the chamber 12 is also treated in an enlarged biological filter chamber 62. Water is pumped to the biological filter chamber 62 from the first biological filter chamber 26 through supply line 63 and returned by outlet 64 to the chamber 29 and chamber 28 for ozone and/or ultraviolet treatment in the manner described above before return to the body of water.

As shown in Fig. 8, the apparatus 61 may be enclosed by a domed cover 65 to prevent escape of fish or exposure of the apparatus 61 to the elements and/or to control the temperature of the water in the chamber 12. The cover 65 of course may be in many different configurations and may be a solid rigid cover or formed of a flexible or fabric. Covers of similar configuration may be used in combination with the apparatus 10 and 50 described above.

Figs. 9 to 12 illustrate a further embodiment of aquaculture apparatus 66 according to the invention in which in this case the main chamber 67 for holding fish or freshwater or marine invertebrates comprises a peripherally extending continuous channel 68. Typically the channel 68 is formed by a series of interconnected channel elements, one 69 of which is illustrated in Fig. 13A. Respective channel elements may be connected in any manner to define an endless channel 68 on the outside of the apparatus 66. In one arrangement as shown in Fig. 13A, portions of channel elements 69 and 70 may be abutted against each other, each element 69 and 70 having a re-entrant recess 71 and 72 respectively which may be aligned to receive an elongated connector 73 which at each end is complementary the recesses 71 and 72 such that the connector 73 may be slid into the recesses 71 and 72 to join the elements 69 and 70 and maintain the elements 69 and 70 in abutment. The connector 73 may also act as a seal to seal the abutting elements 69 and 70. The recesses 71 and 72 may be of any reentrant form such as a dovetail form

or part circular form and the connector 73 formed of a corresponding cross section.

The peripherally extending channel 68 surrounds water treatment apparatus 74 for treating water in the channel 68 and returning the treated water to the channel 68. The apparatus 74 includes a swirl chamber 75 which communicates with the channel 68 through a spillway 76 such that water flows from the upper level in the channel 68 into the swirl chamber 75. Waste traps 77 (see also Fig. 13A) in opposite sides of the channel 68 are connected to the base of the swirl chamber 75 by suitably ducting such that solids such as faeces or uneaten food within the channel 68 are also directed to the swirl chamber 75.

Water from the swirl chamber 75 flows through spillways 78 into a pair of drum filters 79 for removal of solids, the drum filters 79 being of the configuration as described above and as described in our aforementioned International patent application No. PCT/AU02/01245. The drum filers 79 are supported above biological filter chambers 80 which carry biological filter media supporting bacteria for removal of ammonia and/or nitrites and nitrates. Water in the chambers 80 is then pumped for example by a submergible pump to a further biological filter chamber 81 for removal of phosphates through a supply line 82. Alternatively the functions of the biological filter chambers 80 and 81 may be reversed. Water is sprayed or distributed over the biological filter chamber 81 by spray bars or distribution channels 83.

An outlet at the lower end of the chamber 81 is connected through outlet line 84 to a series of cascading ultraviolet light treatment chambers and ozone treatment chambers 85 in which the water outlet from the biological treatment chamber 81 is subject to ultraviolet light and ozone in the manner described above with reference to Figs. 1 and 2. The treated water from the chambers 85 then flows through channel 86 under the influence of gravity back to the main channel 68 in which the fish or marine or freshwater invertebrates are located.

The apparatus 66 may also be provided with foam fractionators 87 spaced around the inner and/or outer periphery of the channel 68. The foam fractionators 87 may have chambers integrally formed within the channel elements or may comprise separate chambers. The foam fractionators 87 communicating with the channel 68 via ultraviolet treatment units 88. Ozone treatment chambers 89 may also be provided to communicate with the foam fractionators 87.

The apparatus 66 additionally may include an annular roof section 90 (see Fig. 9)

which is complementary to the channel 68 to cover the channel 68. The interior of the apparatus 66 also includes a work area 91 to enable persons to undertake maintenance or other tasks.

The apparatus 66 may be used on land or alternatively may configured to float in a body of water. For this purpose, the elements which form the channel 68 may be constructed of a buoyant material or filled with air or include air chambers or other buoyant members. Alternatively a flotation collar may be provided around the periphery of the channel 68.

An embodiment of buoyant aquaculture apparatus 92 which is similar to the embodiment of Figs. 9 to 12 is illustrated in Figs. 14 to 16, the apparatus 92 including a flotation collar 93 around its periphery. The water treatment apparatus 94 for treating water in the channel 68 is of a different configuration with in this case, water from the biological filter chambers 80 beneath the drum filters 79 flowing into ozone and ultraviolet treatment chambers 85 for treatment with that treated water then being pumped to the biological filter chamber 81. Water from chamber 81 then passes under the influence of gravity by outlet line 95 to a second set of ozone and ultraviolet treatment chambers 96 and returned through channel 86 to the main channel 68.

Figs. 17 and 18 illustrate a further embodiment of apparatus 97 similar to the above embodiments and suitable either for use on land or water. In this case however, water from the swirl chamber 75 is pumped through supply line 98 to a pair of drum filters 79 located over biological filter chamber 99 in which the filtered water from the drum filters 79 is exposed to bacteria carried by biological filter media therein. Outlets 100 from the base of the chamber 99 direct the treated water from the chamber 99 to a further chamber 101 in which the water may be subject to further biological filtering treatment. The treated water then flows through spillway 102 to a series of cascaded ozone and ultraviolet treatment chambers 103 for return via the channel 86 to the main channel 68.

The apparatus 97 may be provided with a flotation collar similar to that shown in Figs. 14 to 16 to enable the apparatus 97 to float on a body of water. The channel 68 may also be covered by a cover or roof similar to that shown in Fig. 14. The channels 68 of the apparatus of Figs. 9 to 17 may be of a U- or C-shaped trough -like form or any other suitable cross section.

In each apparatus described above, the drum filters suitably are suspended over

water collection chambers and can clean themselves whilst continuing to operate at full capacity. As the drum filters do not have a shaft, components can easily fitted within the interior of the filter. By incorporating the use of compressed air as well as water, the drum filter can be clean continually or spasmodically which ever is required. Water and/or air bars for cleaning the drum filter can be set side-by-side for individual use or incorporated into one. Other gases may be used for cleaning provided they are non-toxic or polluting. Various different forms of screen or drum filters however may be employed other than those described in the embodiments.

In the ozone treatment chambers or foam fractionator chambers, water flowing into the chambers is exposed to ozone or oxygenation by passing bubbles of air through the chambers. For this purpose, air stones or other outlets which are connected to a source of ozone or air are provided in the lower portions of the chambers. Any suitable ozone generator which may be used for supplying ozone for the above purpose.

In the respective ultraviolet treatment chambers, ulltraviolet light generators or sources are provided in the chambers so that water flowing into the chambers is exposed to ultraviolet light. In the cascaded ozone and ultraviolet light treatment chambers, water preferably flows down the ozone treatment chambers against the flow of ozone bubbles and up an ultraviolet treatment chamber from the base of the ozone treatment chamber. Communication between the respective chambers may be provide by openings between respective chambers or by baffles which define flow paths for water beneath the baffles or over the upper end of the baffle which forms a weir.

Where possible the respective filtering and treatment elements of the water treatment apparatus are arranged such that water flows under the influence of gravity through the water treatment elements. Alternatively or additionally, the water may be pumped through the water treatment elements.

Referring now to Figs. 19 and 20 there is illustrated a floating aquaculture assembly 104 including a floating aquaculture apparatus 10 of the type illustrated and described in Figs. 1 and 2 with a pair of floating water treatment apparatuses 105a and 105b positioned on opposite sides of the apparatus 104, the apparatus 105a being provided to treat water for supply to the apparatus 10 and the apparatus 105b being provided for treating water exiting the apparatus 10.

Each water treatment apparatus 105a and 105b is similar to the type disclosed in our International patent application No. PCT/AU2005/000878 and is more clearly shown

in Figs. 21 and 22. Each apparatus 105 includes a one piece tank 106 which may comprise a single plastics moulding and which includes a main tank part 107 and a series of further interconnected tank parts 108, each being of a similar configuration. A removable cover 109 covers the tank 106, the cover 109 being of maximum height above the main tank part 107 at one end of the tank 106 and being of a reducing height towards the opposite end of the tank 106.

A filter drum 110 similar to that previously described is supported over the chamber 107 of the main tank part 106 on freely rotatable rollers 111 carried by a sub-housing 112, the sub-housing 112 being seated on the upper side of the tank 106 above the tank part 107. The sub-housing 112 has a lower horizontal wall 113 which is perforated or otherwise pervious to water. The housing 112 can carry a bacteriological media 114 which is supported on the wall 113 above the tank part 107 and which can carry aerobic bacteria for biological treatment of water passing through the filter drum 110 and downwardly towards the tank part 107. The tank part 107 carries further bacteriological media 115 for carrying anaerobic bacteria for further biological treatment of water flowing into the tank part 107 from the sub-housing 112.

Transverse baffles 116 are provided in each tank part 108 to separate each tank part 108 into two chambers 117 and 118. In this case the baffles 116 are of all the same height. One chamber 117 carries bacteriological media for supporting further anaerobic bacteria for treating water flowing downwardly through the chamber 117 for further bacteriological treatment of water. Ozone outlets 119 are provided in the lower ends of the chambers 118 to bubble through water in the chamber 118 which has passed from the chamber 117 beneath or through the baffles 116 at the lower end of the chambers 117 and 118. The ozone outlets 119 may be of any configuration and may be simple nozzles, gas or air stones, or gas permeable pipes. For conveyance of water from one chamber 117 to the adjacent chamber 118, the lower ends of the baffles 1116 are provided with a series of cut-out portions or openings 120 through which water can flow from one chamber 117 to the adjacent chamber 118. In another arrangement the baffles 116 may be raised above the bottom of each tank part 108 so that water may flow under the edge of a baffle 116. An outlet or outlets 121 for water is/are provided in the outer wall of the trailing tank part 107, the outlet or outlets 121 being below the upper edges of the baffles 116.

As indicated by the arrows in Fig. 22, water filtered by the filter drum 110 is

subject to aerobic bacteriological treatment as it flows downwardly through the sub-housing 112 and then subject to anaerobic bacteriological treatment as it passes into the main tank part 107. The level of water in the tank part 107 rises until it reaches the upper edge 122 of an inner wall of the tank part 107 which acts as a weir over which the water flows into the chamber 117 of the first tank part 108 where it is again subject to bacteriological treatment as it flows downwardly through the chamber 117. The water then flows through or under the lower portion of the baffle 116 into the chamber part 118 in which it is subject to the sterilizing effect of ozone supplied to the chamber part 118 through the outlets 119. This water flow continues through the remaining tank parts 108 flowing downwardly through the chambers 117 on one side of the respective baffles 116 and upwardly through the chambers 118 on the other side of the respective baffles 116 with water passing from each tank part 108 to the adjacent tank part 108 over the respective upper edges 123 of the adjacent joined walls of the respective tank parts 117. This flow continues until treated water flows outwardly through the outlet or outlets 121.

In an alternative arrangement the ozone outlets 119 may be in the lower portions of the chambers 117 with the media in the chamber parts 117 limiting flow of water so that extended contact time is provided between the ozone flowing upwardly through the chamber 117 and water flowing downwardly through the chamber 117. The ozone outlets 119 may also be connected to an air supply if desired to selectively enable bubbles of air to flow upwardly through the chambers 117 or 118. In this configuration, the chamber parts 118 may include ultraviolet lamps (not shown) so that water flowing upwardly through the chamber parts 118 is exposed to ultraviolet light in the manner described previously.

The tanks 106 of the water treatment apparatus 105a and 105b are supported on a floating structure 124 as described in our aforesaid International Patent Application No. PCT/AU2005/000878 and includes floats 125 on each side and at the tank part 107 end of the tank 106 and transversely extending support members or rods 126 which are supported at opposite ends on the side floats 125 and extend between the adjacent tank parts 106 and 107 with the joins between the adjacent walls of adjacent tank parts beneath the edges 122 and 123 effectively forming saddles which seat on the members 126. A peripheral walkway 127 is supported members 126 and extends around the tank 106.

In the case of the water treatment apparatus 105a, the outlet 121 from the tank

106 is connected to the inlet 37 to the drum filter 34 for eventual supply to the main chamber 12. Thus water in which in the assembly 104 is floating is initially treated in the water treatment apparatus 105a before supply to the aquaculture 10. Water exiting from the outlet 32 of the apparatus 10 is supplied to the inlet to the water treatment apparatus 105b using a pump and inlet similar to the inlet 37, pump 36 and supply line 38 for supply to the filter drum 110 of the apparatus 105b. Water treated by the apparatus 105b exits through the outlet or outlets 121 back into the body of water in which the assembly 104 is floating. When the water treatment apparatus 105a and 105b is used, the water treatment apparatus contained with the apparatus 10 may not be necessary in some environments (depending upon the quality of the water in which the assembly 104 is floating).

For supply of power to the various power driven components of the assembly 104 such as pumps, UV light sources or ozone generators, a further floating structure or platform 128 is provided to support an electrical generator 129 usually arranged to charge batteries also supported on the structure or platform 128. The structure or platform 128 is secured at one end to the apparatus 10 but may be positioned where desired. Power may also be supplied from land.

Fig. 23 illustrates an embodiment of floating aquaculture assembly 130 similar to that shown in Figs. 19 and 20 except that in this case, an additional aquaculture apparatus 10' of the same form as the apparatus 10 is provided with two additional and associated water treatment apparatuses 105a and 105b for treating water supplied to the apparatus 10' or exiting the apparatus 10'. In this case a single power generator 129 or electrical supply is provided on the floating platform 128 between the pair of apparatuses 10 and 10'

Referring now to Figs. 24 and 25, there is illustrated another embodiment of aquaculture assembly 131 according to the invention which is similar to that of Fig. 23 except that in this case, the assembly 131 includes two aquaculture apparatus 66 of the type shown in, and described with reference to Figs. 9 to 12. Alternatively the apparatuses 66 may be provided with floatation collars 93 as in Figs. 14 to 16. Water from the body of water in which the assembly 131 is floating which is supplied to each apparatus 66 is initially treated in water treatment apparatus 105a of the type described above whilst water exiting each apparatus 66 is treated in the water treatment apparatus 105b before return to the body of water again as described above.

In this case however water may be supplied from the apparatus 105a to the swirl chamber 75 in the apparatus 66 for undergoing treatment before supply to the channel 68 containing fish or marine or freshwater invertebrates. Water may be withdrawn from the channel 68 such as by a submerged pump or through the waste traps 77 for treatment in the apparatus 105b before return to the body of water in which the assembly 130 is floating.

Whilst particular combination of screens filter, biological treatment chambers, ultraviolet treatment units, foam fractionators and/or ozone treatment units have been described, different combinations of filtering or water treatment components may be employed and additional components added in series or parallel if required. The filtering or treatment components may also be arranged in a different sequence. The bacteriological filters may be configured for aerobic and/or anaerobic bacterial treatment of the water depending upon the substances to be removed from the water.

The components of the apparatus may be formed of any suitable materials. In a particular configuration, the chamber components and main body including the elements of the channel 68 of the apparatus may be formed of plastics by rotational moulding.

It should be noted that reference to the prior art herein is not to be taken as an acknowledgement that such prior art constitutes common general knowledge in the art.

The terms "comprising" or "comprise" or derivatives thereof as used throughout the specification and claims are taken to specify the presence of the stated features, integers and components referred to but not preclude the presence or addition of one or more other feature/s, integer/s, component/s or group thereof.

Whilst the above has been given by way of illustrative embodiment of the invention, all such variations and modifications thereto as would be apparent to persons skilled in the art are deemed to fall within the broad scope and ambit of the invention as defined in the appended claims.

Claims

1. Aquaculture apparatus comprising a main body having a chamber for containing fish, crustaceans or other fresh water or marine invertebrates and means for buoyantly supporting said main body in or on a body of water.

2. Aquaculture apparatus as claimed in claim 1 and including water treatment means for treating water for supply to said main chamber from said body of water.

3. Aquaculture apparatus as claimed in claim 1 or claim 2 and including water treatment means for treating water for return from said main chamber to said body of water.

4. Aquaculture apparatus as claimed in claim 2 or claim 3 wherein said water treatment means comprises water treatment means supported on or to said main body.

5. Aquaculture apparatus as claimed in any one of claims 2 to 4 wherein said water treatment means comprises or includes water treatment means separate from said main body.

6. Aquaculture apparatus as claimed in any one of claims 2 to 5 wherein said water treatment means includes one or more screen filters.

7. Aquaculture apparatus as claimed in claim 6 wherein said one or more screen filters comprise rotatable drum filters.

8. Aquaculture apparatus as claimed in claim 6 or claim 7 wherein said water treatment means includes a water treatment chamber for exposing water to be treated to ozone.

9. Aquaculture apparatus as claimed in any one of claims 6 to 8 wherein said water treatment means includes a water treatment chamber containing at least one ultraviolet treatment unit for exposing water to be treated to ultraviolet light.

10. Aquaculture apparatus as claimed in any one of claims 6 to 9 wherein said water treatment means includes a water treatment chamber in which water to be treated to bubbles of gas or air to separate impurities from the water.

11. Aquaculture apparatus as claimed in any one of claims 6 to 10 wherein said water treatment means includes one or more biological filters.

12. Aquaculture apparatus as claimed in any one of claims 6 to 11 wherein said water treatment means includes a swirl chamber.

13. Aquaculture apparatus as claimed in any one of claims 7 to 10 wherein said water treatment chambers are defined by a single tank.

14. Aquaculture apparatus as claimed in claim 13 wherein said tank is divided into a plurality of water treatment chambers by one or more baffles.

15. Aquaculture apparatus as claimed in claim 14 wherein said tank includes a series of tank parts, each said tank part being divided into a pair of water treatment chambers by a baffle.

16. Aquaculture apparatus as claimed in claim 14 or claim 15 wherein a baffle defines a weir over which water flows from one chamber to the other chamber.

17. Aquaculture apparatus as claimed in claim 14 or 15 wherein a baffle has openings in a lower portion thereof through which water may flow from one chamber to the next chamber.

18. Aquaculture apparatus as claimed in claim 14 or 15 wherein an opening between adjacent chambers is defined beneath a baffle.

19. Aquaculture apparatus as claimed in any one of the preceding claims wherein said main chamber comprise an open topped chamber arranged centrally of said main body.

20. Aquaculture apparatus as claimed in any one of the preceding claims wherein said main body is formed of a buoyant material to define said buoyant support means.

21. Aquaculture apparatus as claimed in any one of claims 1 to 19 wherein said buoyant support means includes a separate buoyant body or bodies fixed to said main body.

22. Aquaculture apparatus as claimed in any one of claims 1 to 20 wherein said main chamber comprises an endless channel.

23. Aquaculture apparatus as claimed in claim 22 wherein said channel is defined by a plurality of releasably interconnected channel elements.

24. Aquaculture apparatus as claimed in claim 23 wherein said channel comprises a peripherally extending channel.

25. Aquaculture apparatus as claimed in any one of claims 22 to 24 wherein said buoyant support means comprise one or more buoyant bodies n the outside of said channel.

26. Aquaculture apparatus as claimed in any one of claims 1 to 25 wherein at least the main chamber is covered by a cover to define an enclosed air space over the chamber.

27. Aquaculture apparatus adapted for floatation on a body of water and comprising a chamber for containing fish, crustaceans or other fresh water or marine invertebrates, first water treatment means for treating water from said body of water for supply to said chamber, and second water treatment means for treating water from said chamber for return to said body of water.

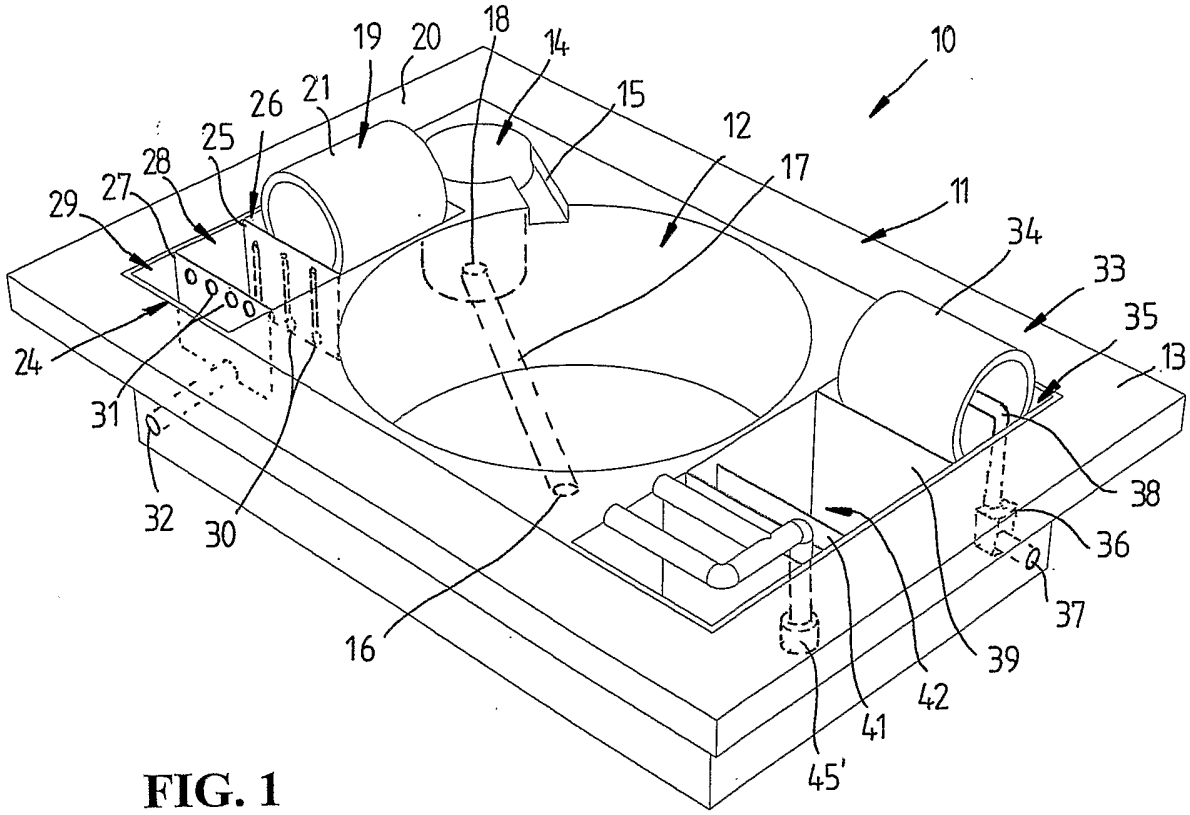
10
11
12
13
14
15
16
17
18
19
20
21
24
25
26
27
28
29
30
31
32
33
34
35
36
37
38
39
41
42
45'

FIG. 1

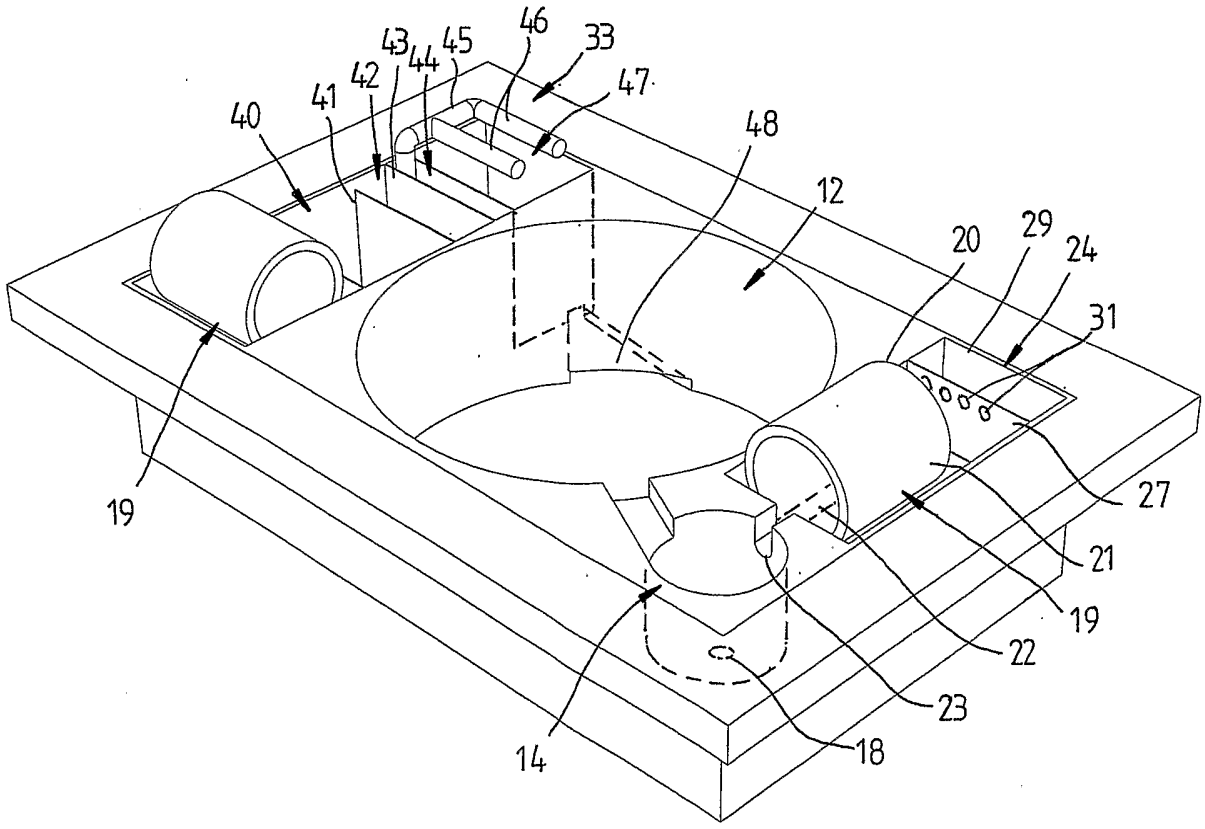
12
14
18
19
20
21
22
23
24
27
29
31
33
40
41
42
43
44
45
46
47
48

FIG. 2

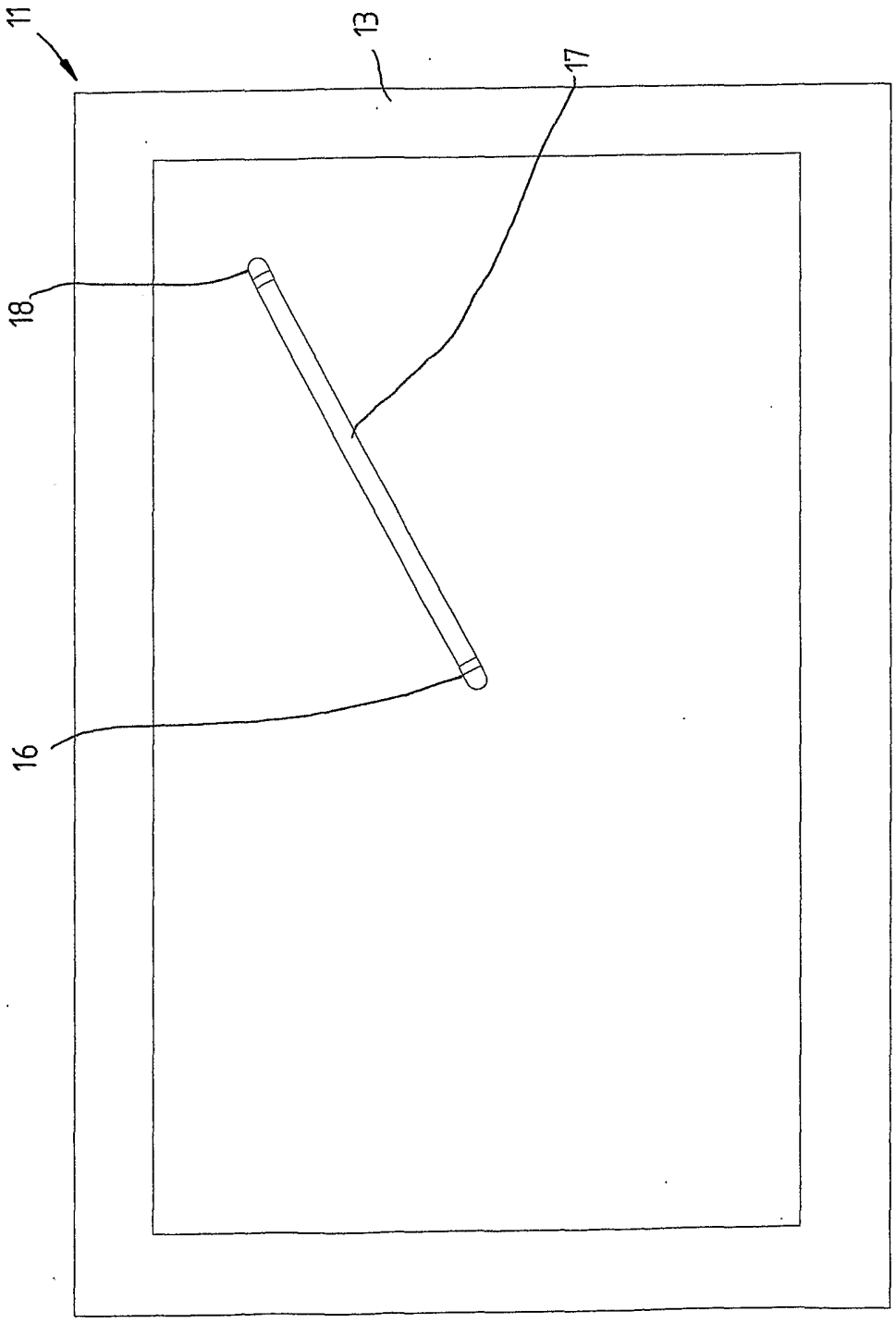

FIG. 3

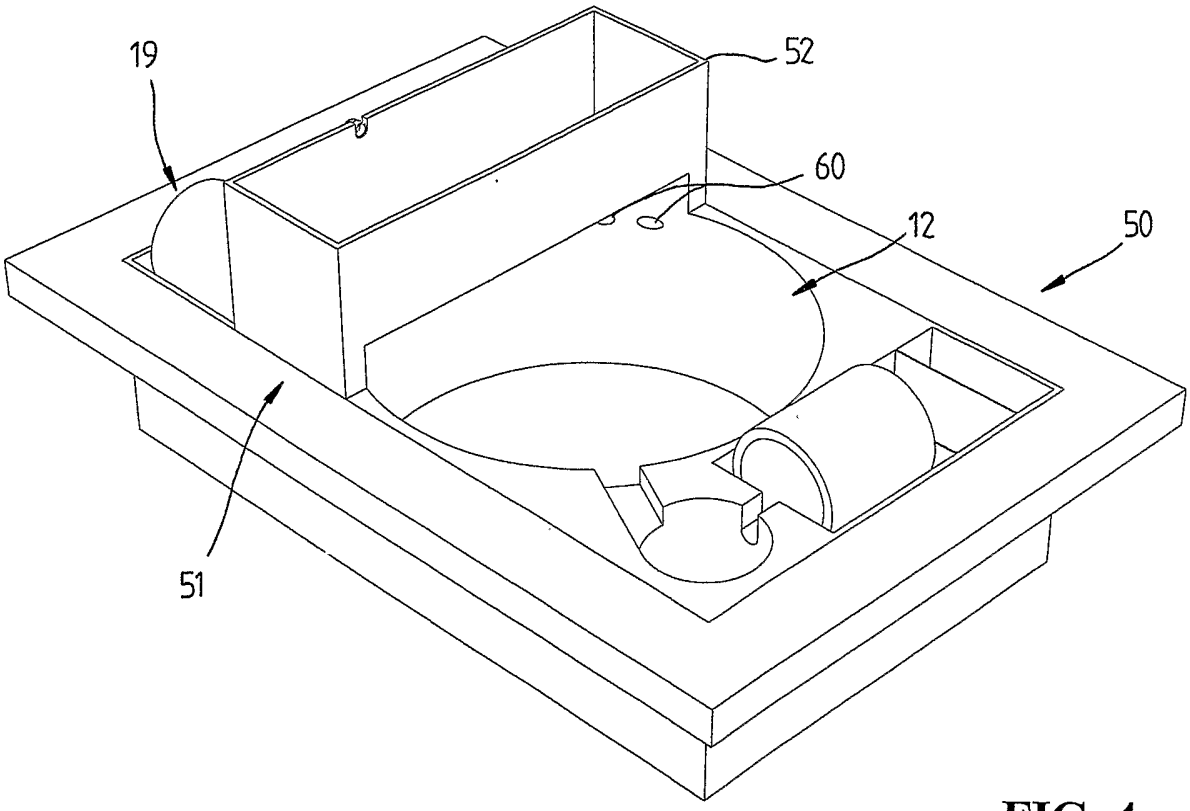

FIG. 4

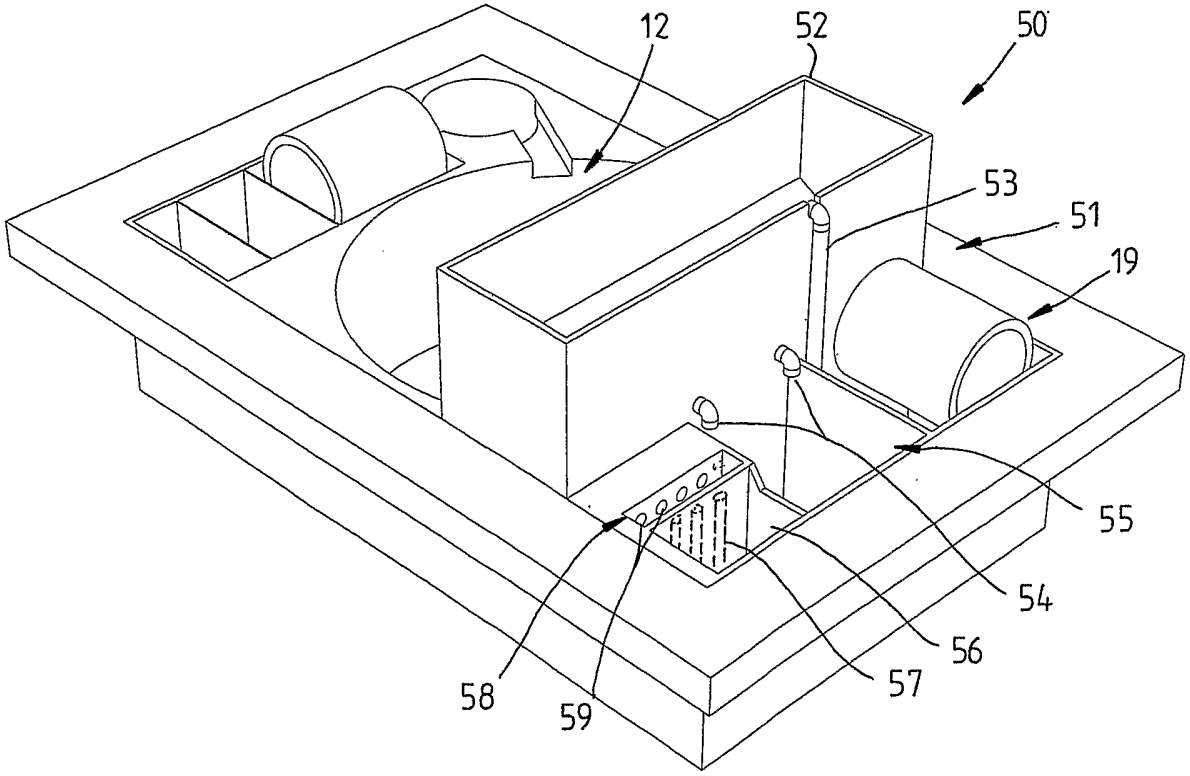

FIG. 5

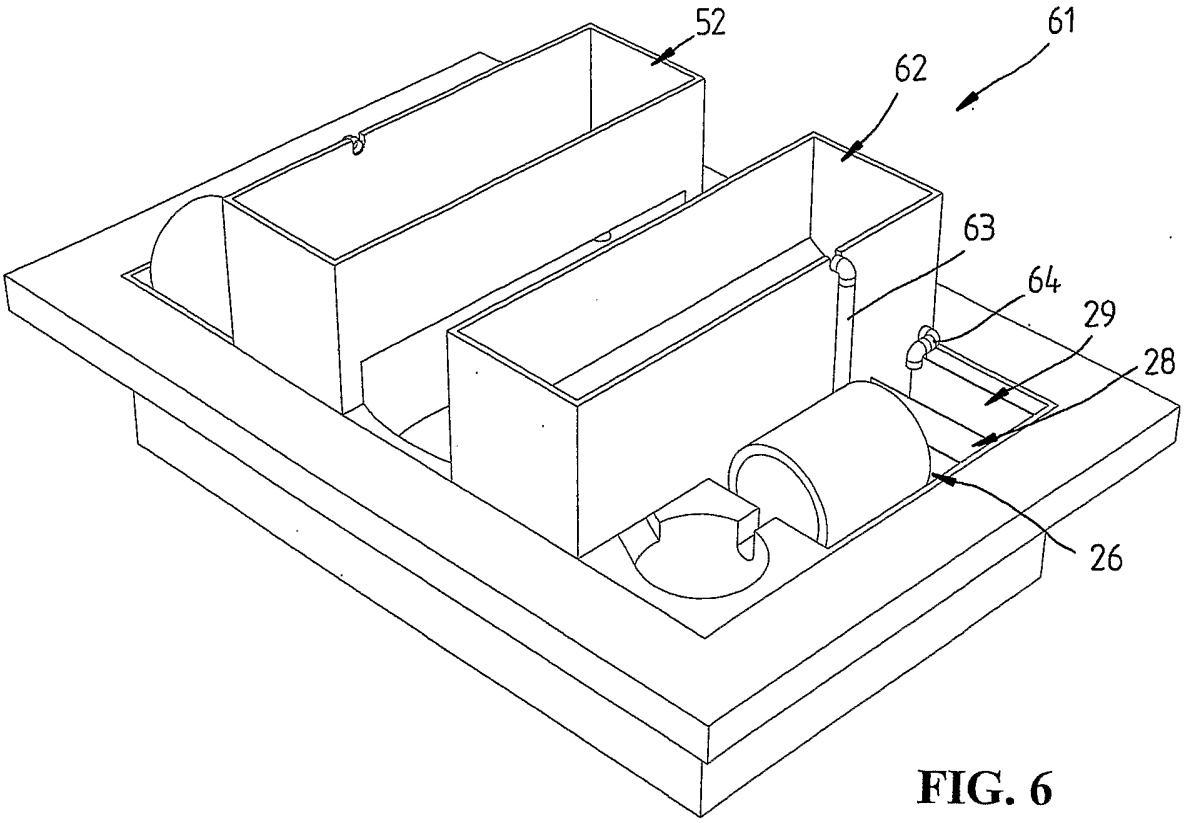

FIG. 6

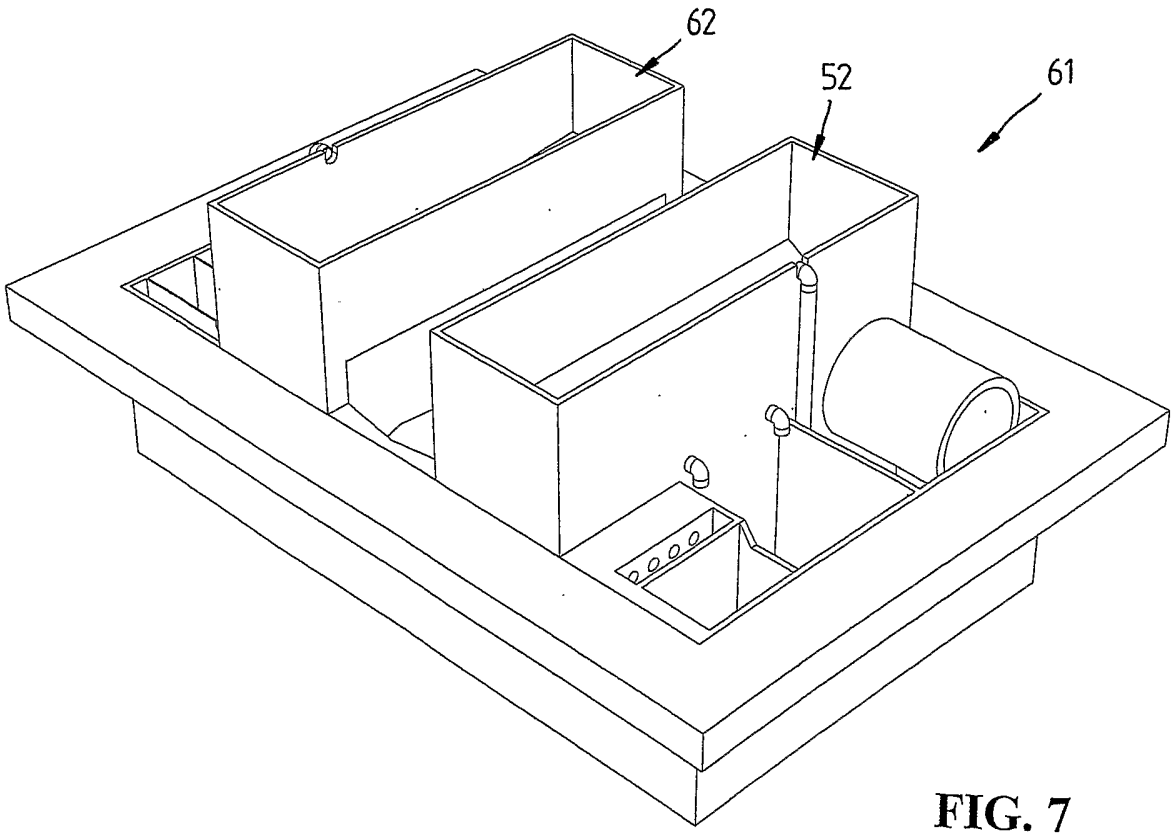

FIG. 7

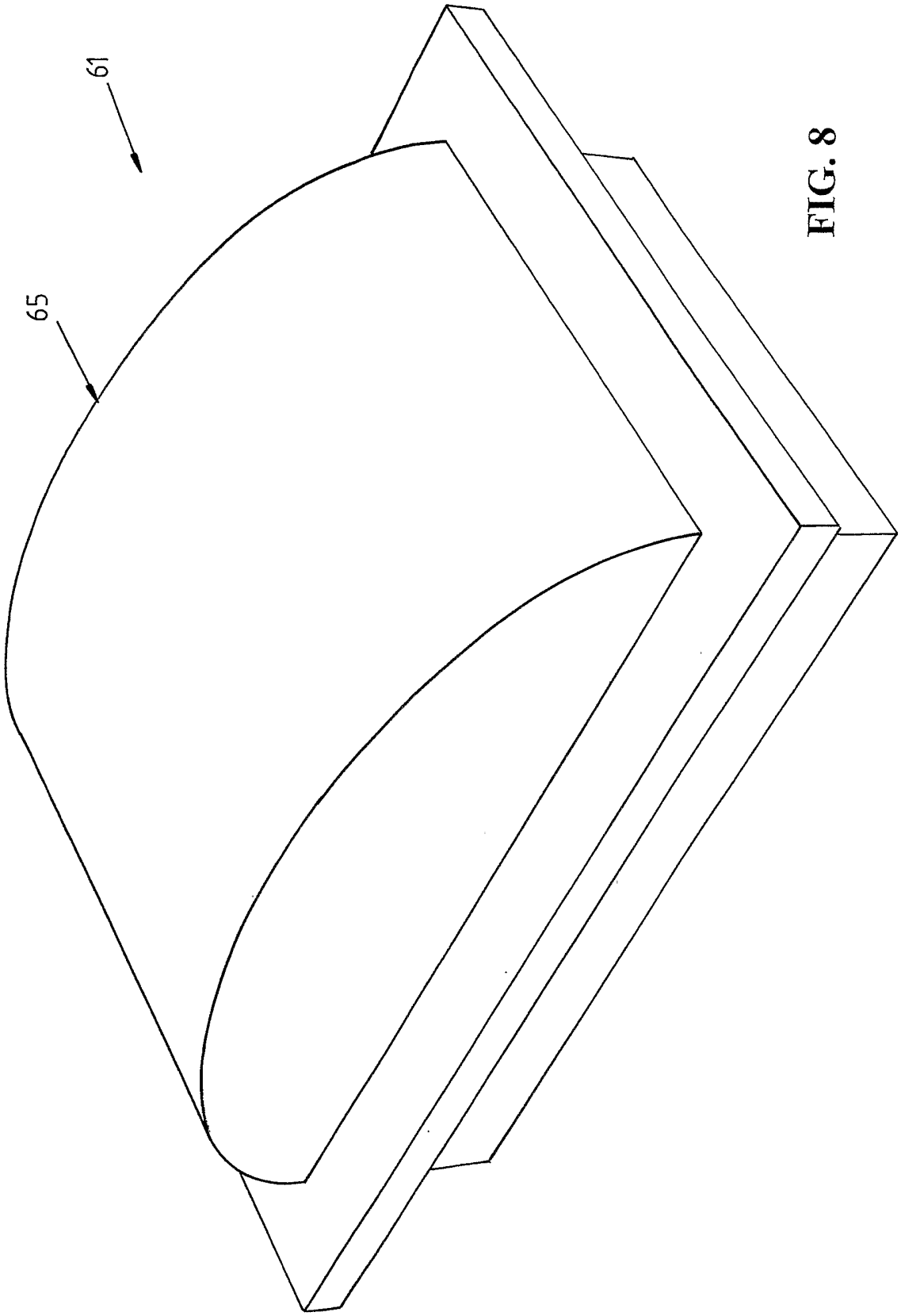

FIG. 8

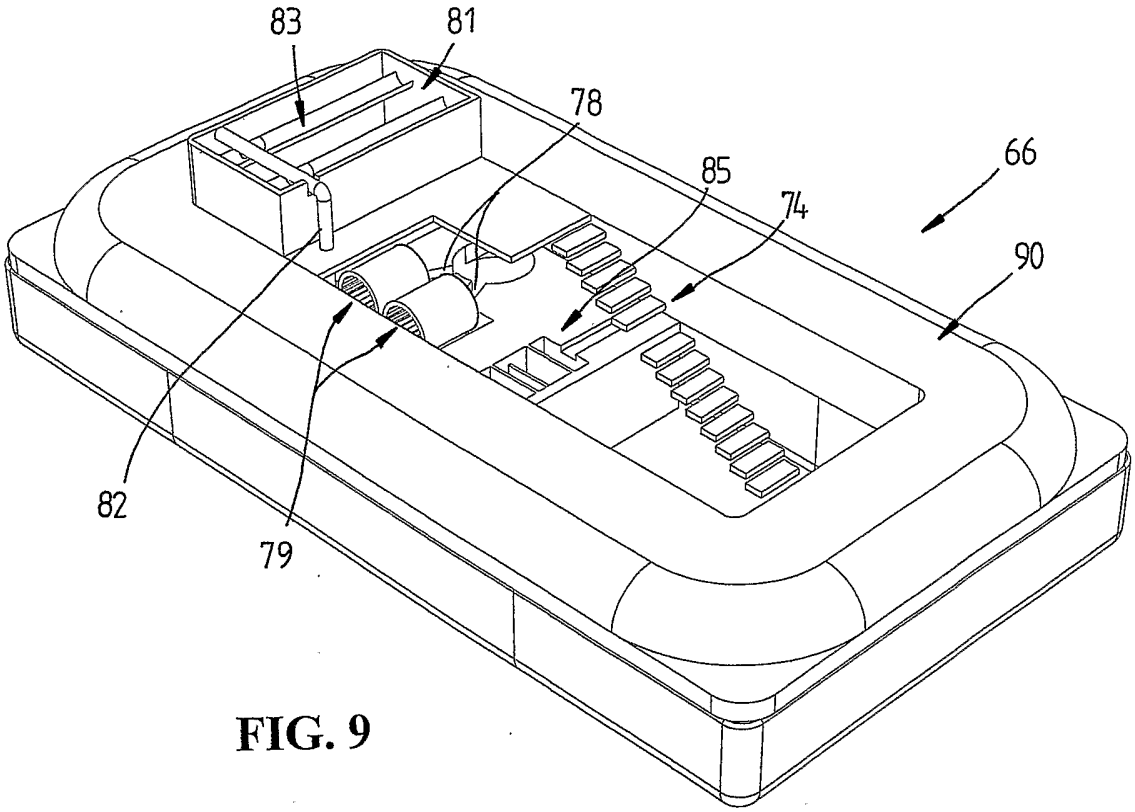
83
81
78
85
74
66
90
82
79

FIG. 9

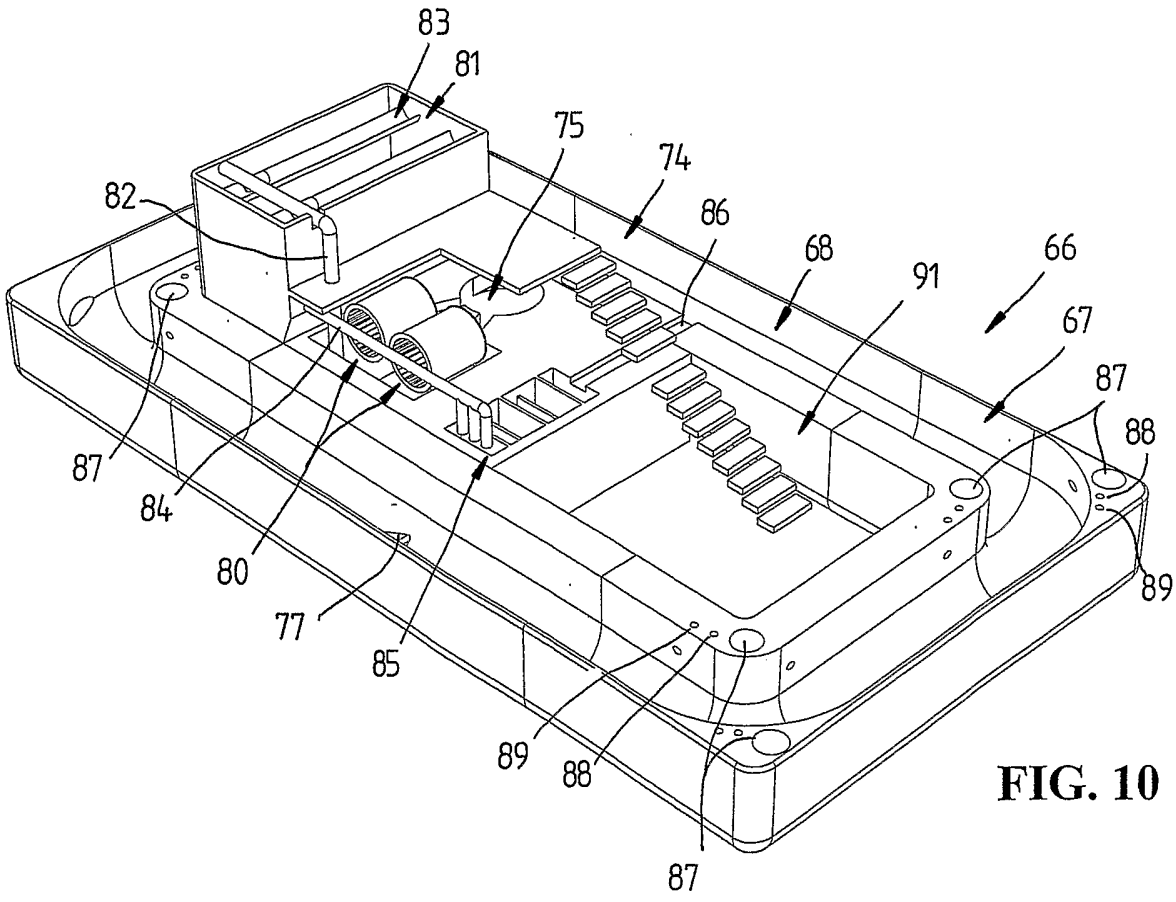
83
81
75
74
82
86
68
91
66
67
87
88
87
84
80
77
85
89
89
88
87

FIG. 10

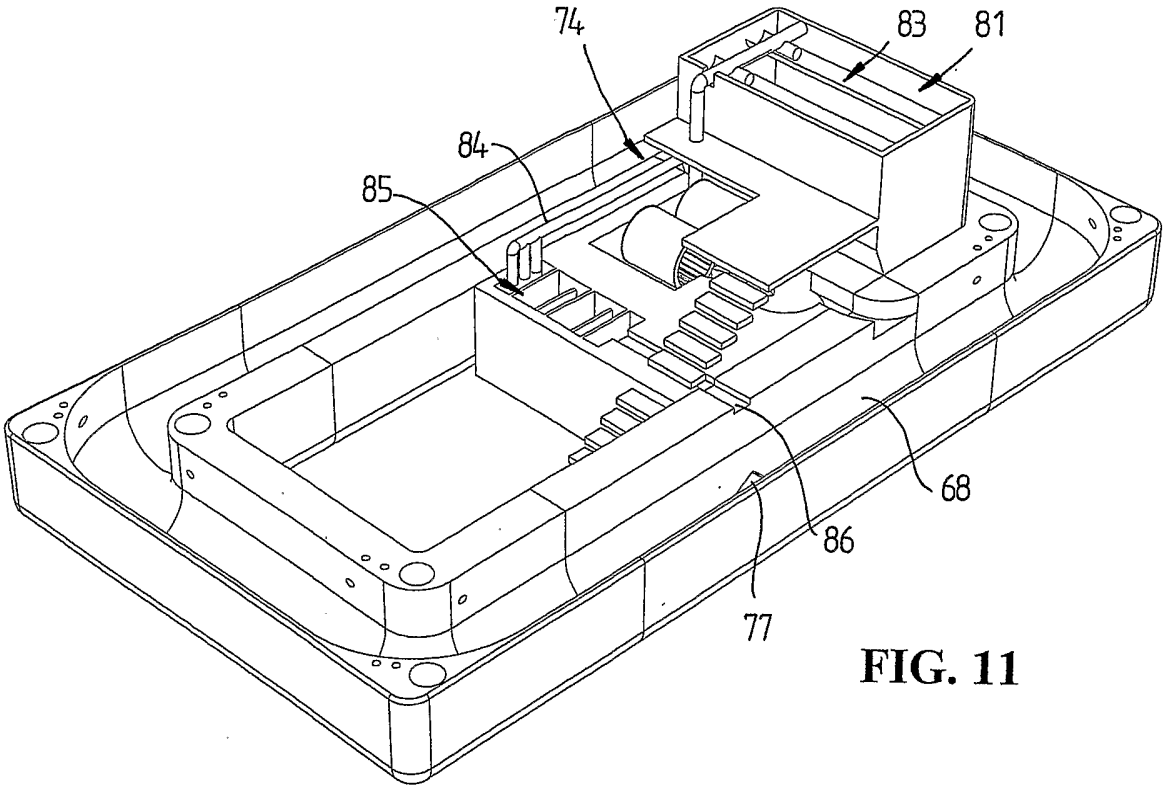

FIG. 11

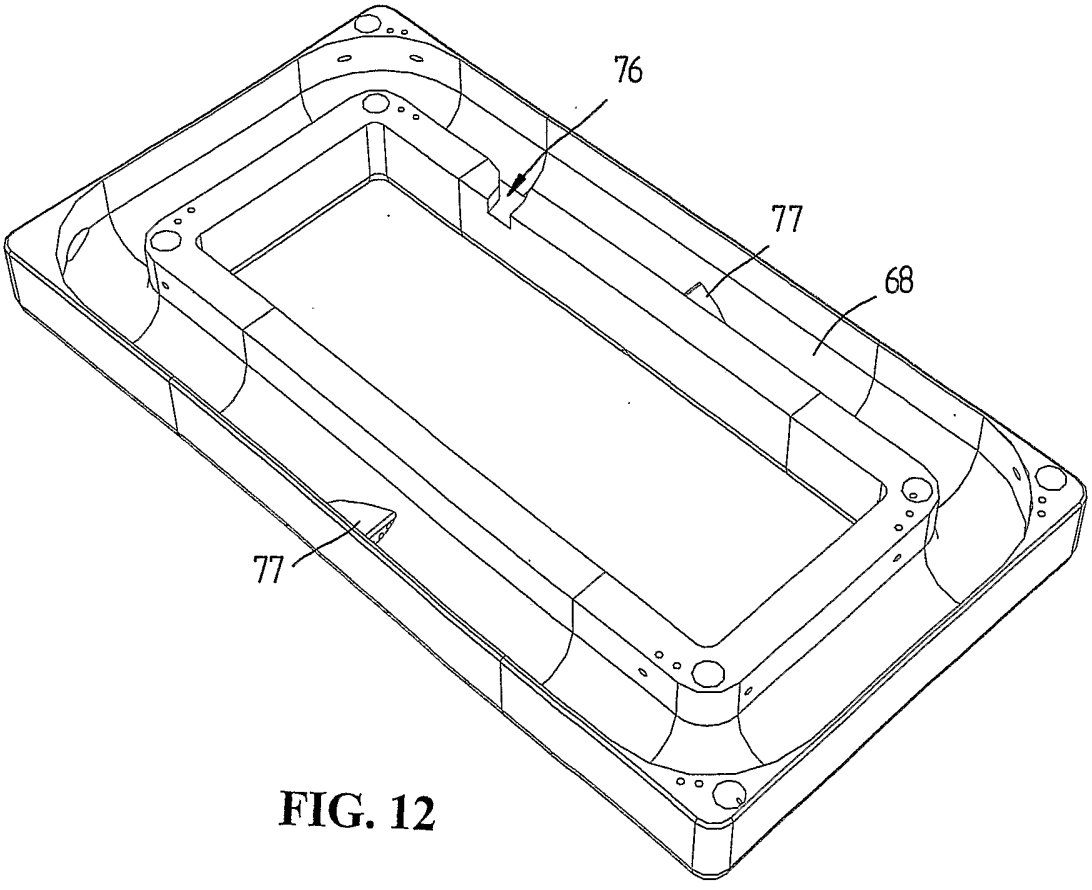

FIG. 12

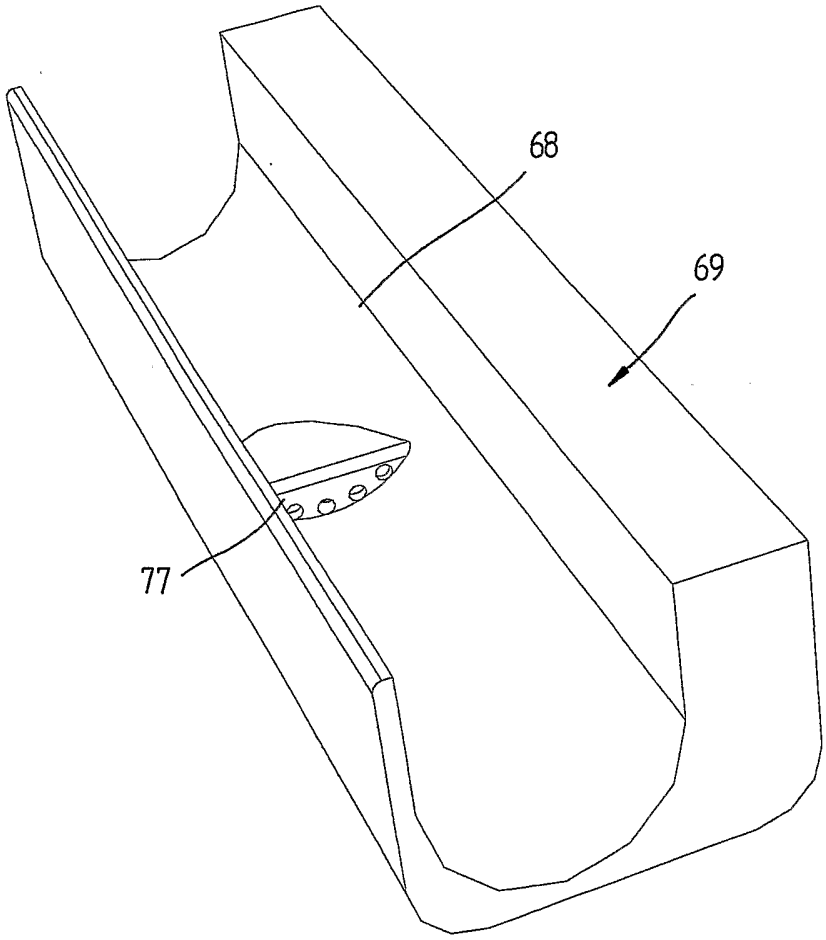

FIG. 13A

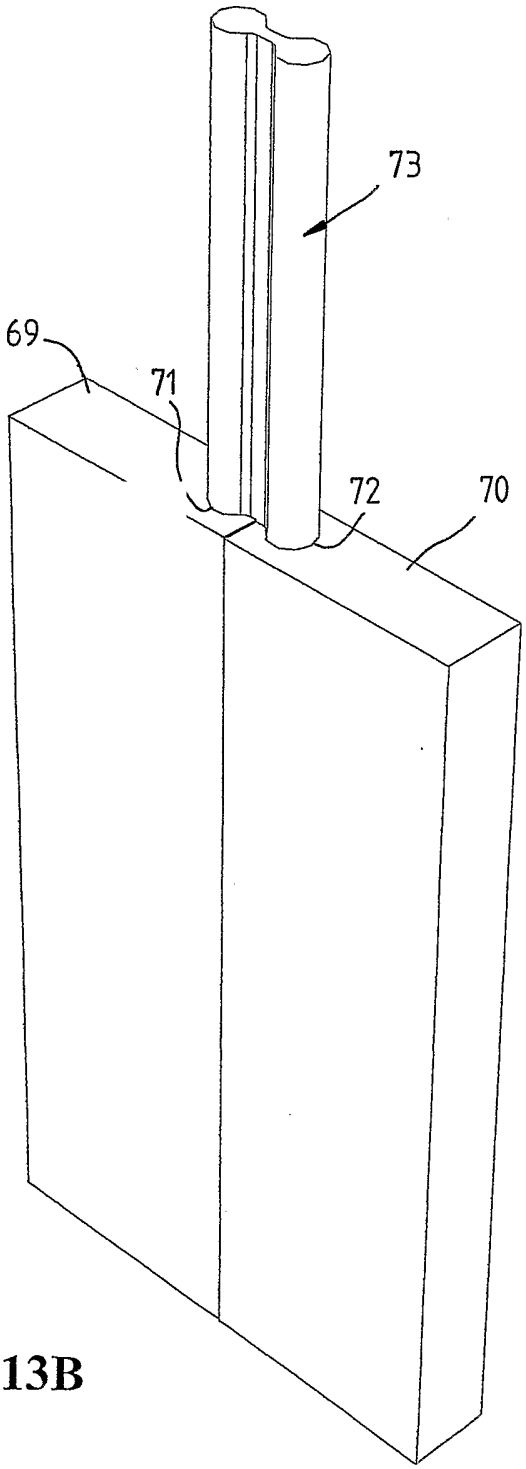

FIG. 13B

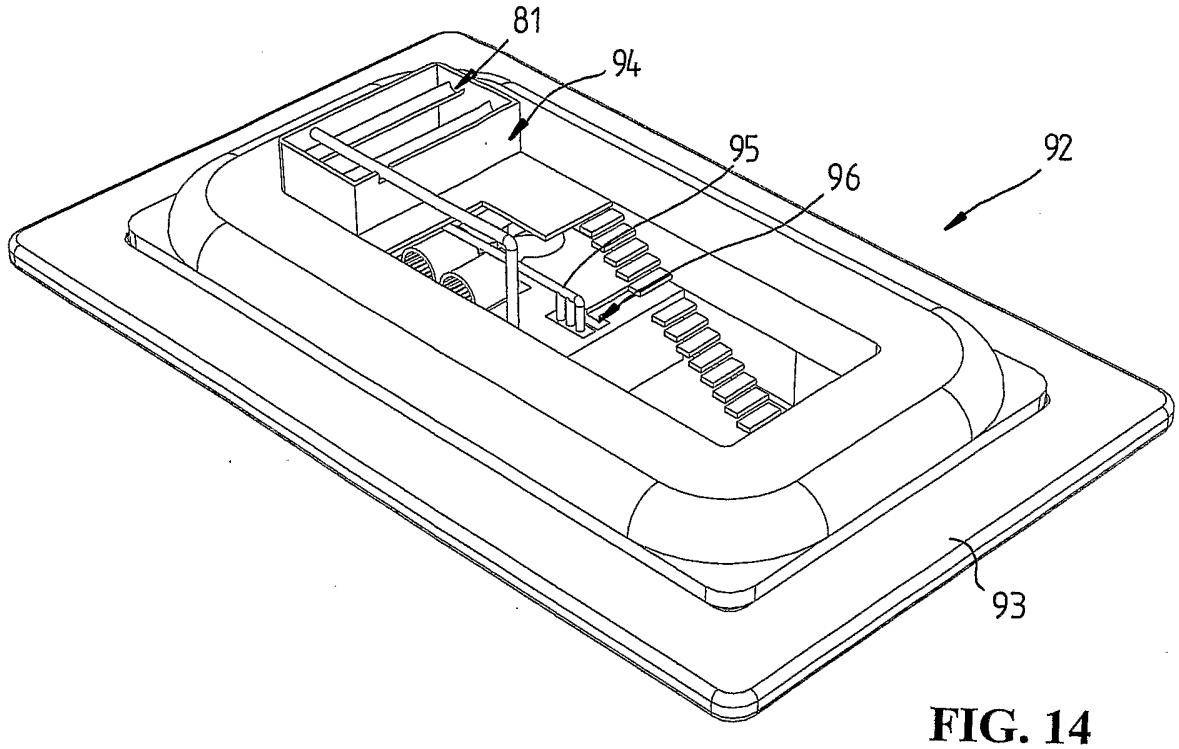

FIG. 14

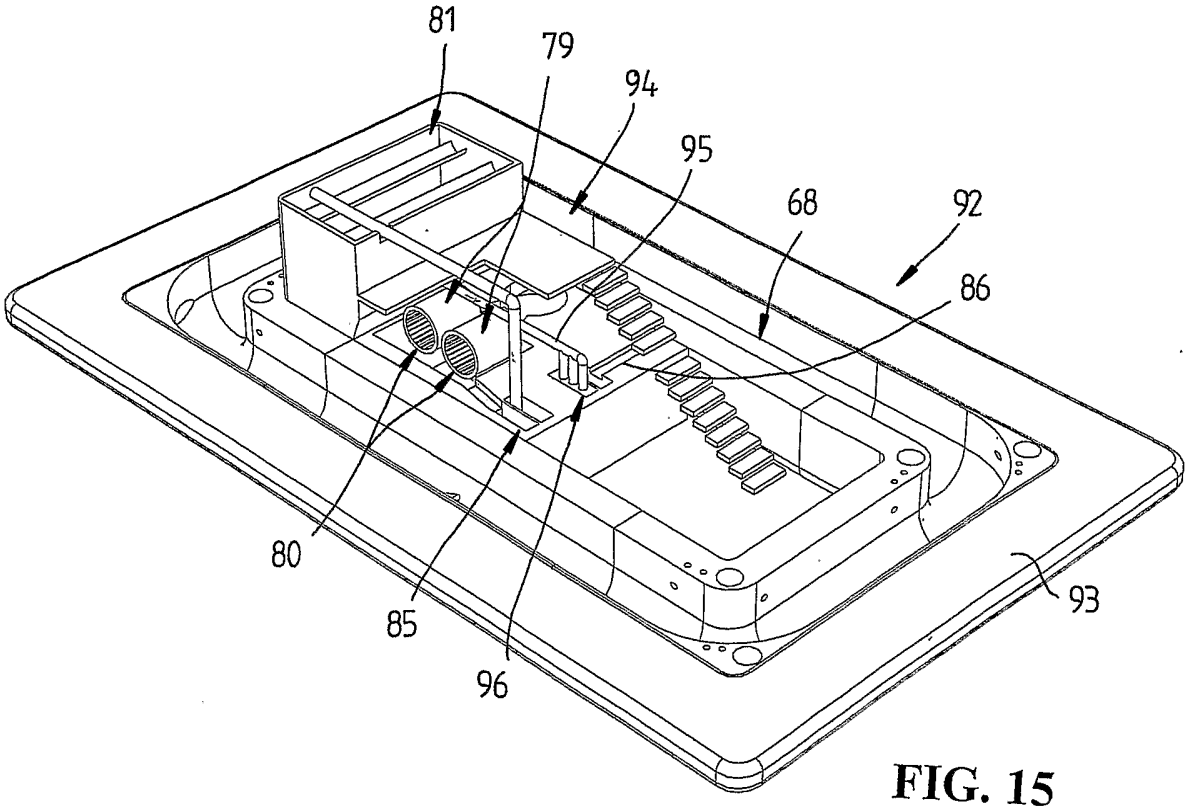

FIG. 15

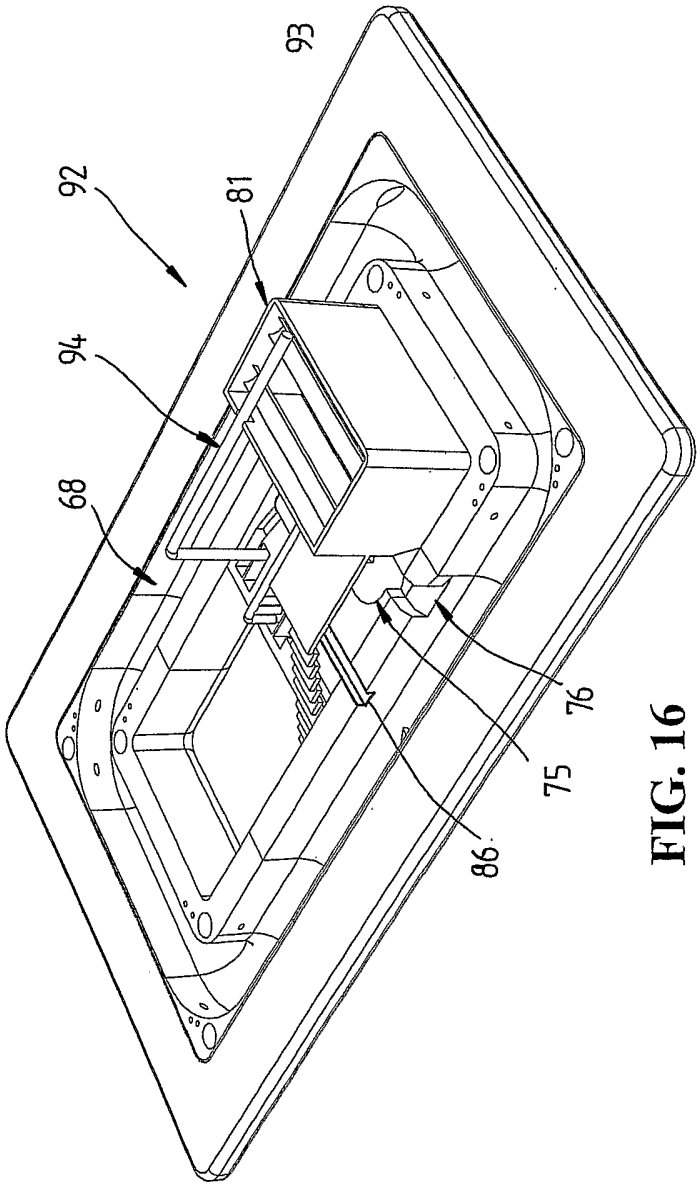

FIG. 16

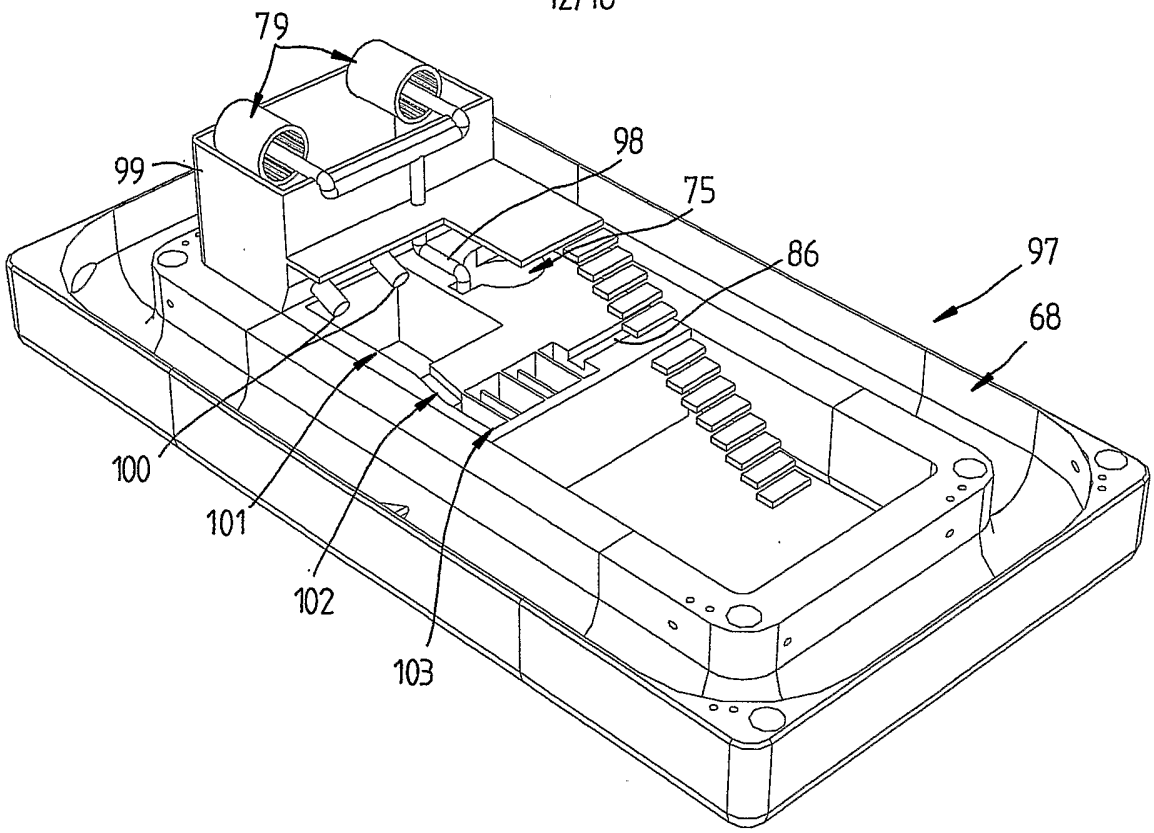

FIG. 17

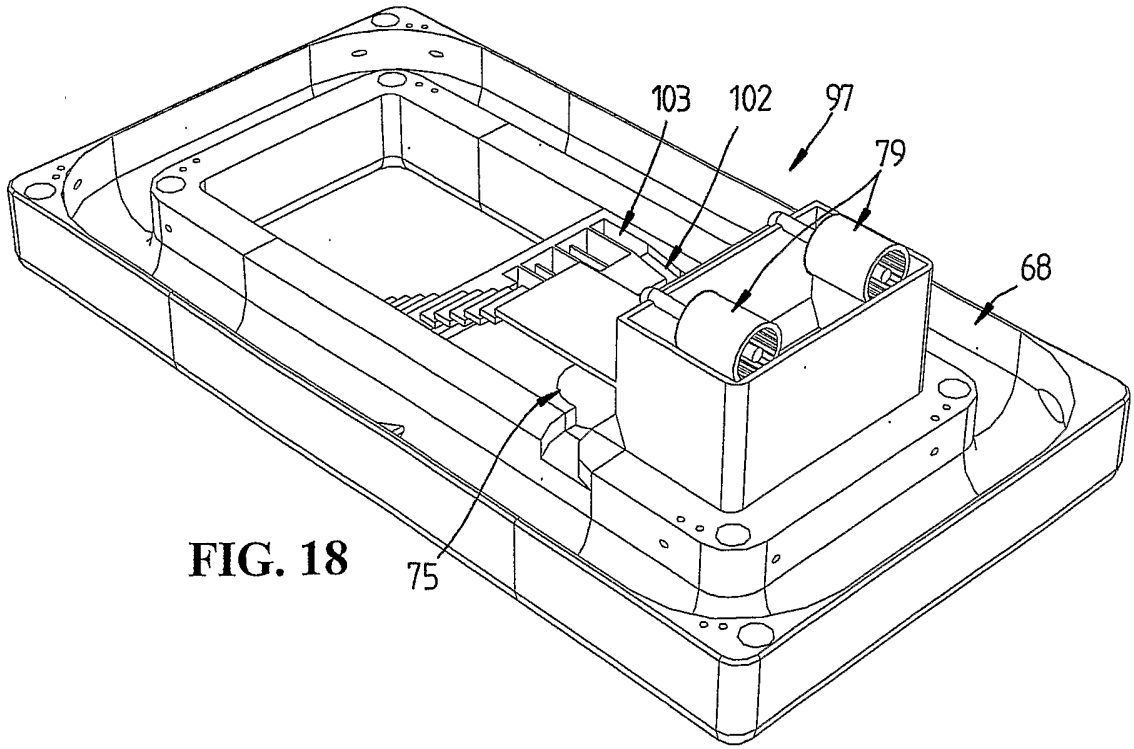

FIG. 18

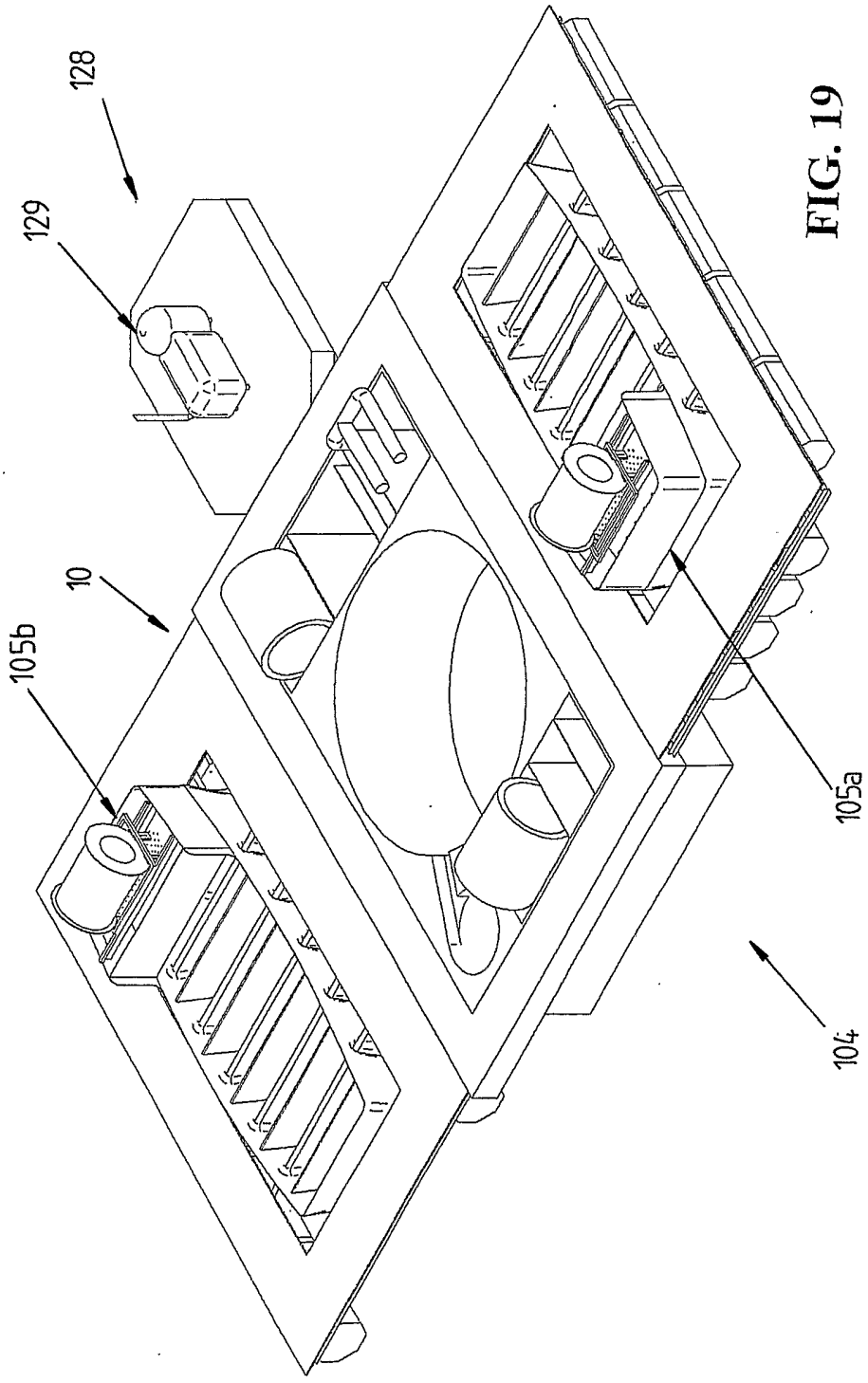

FIG. 19

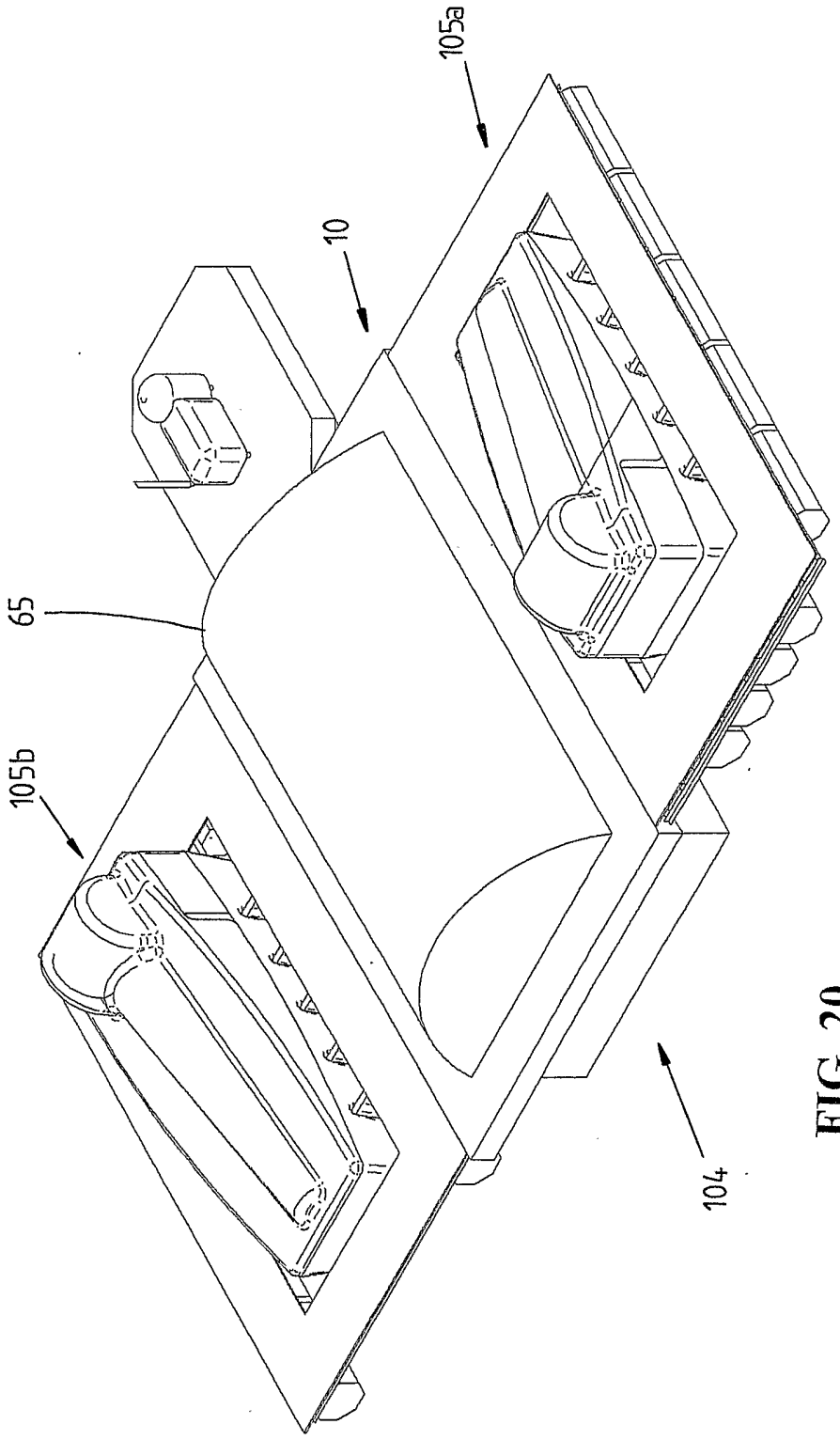

FIG. 20

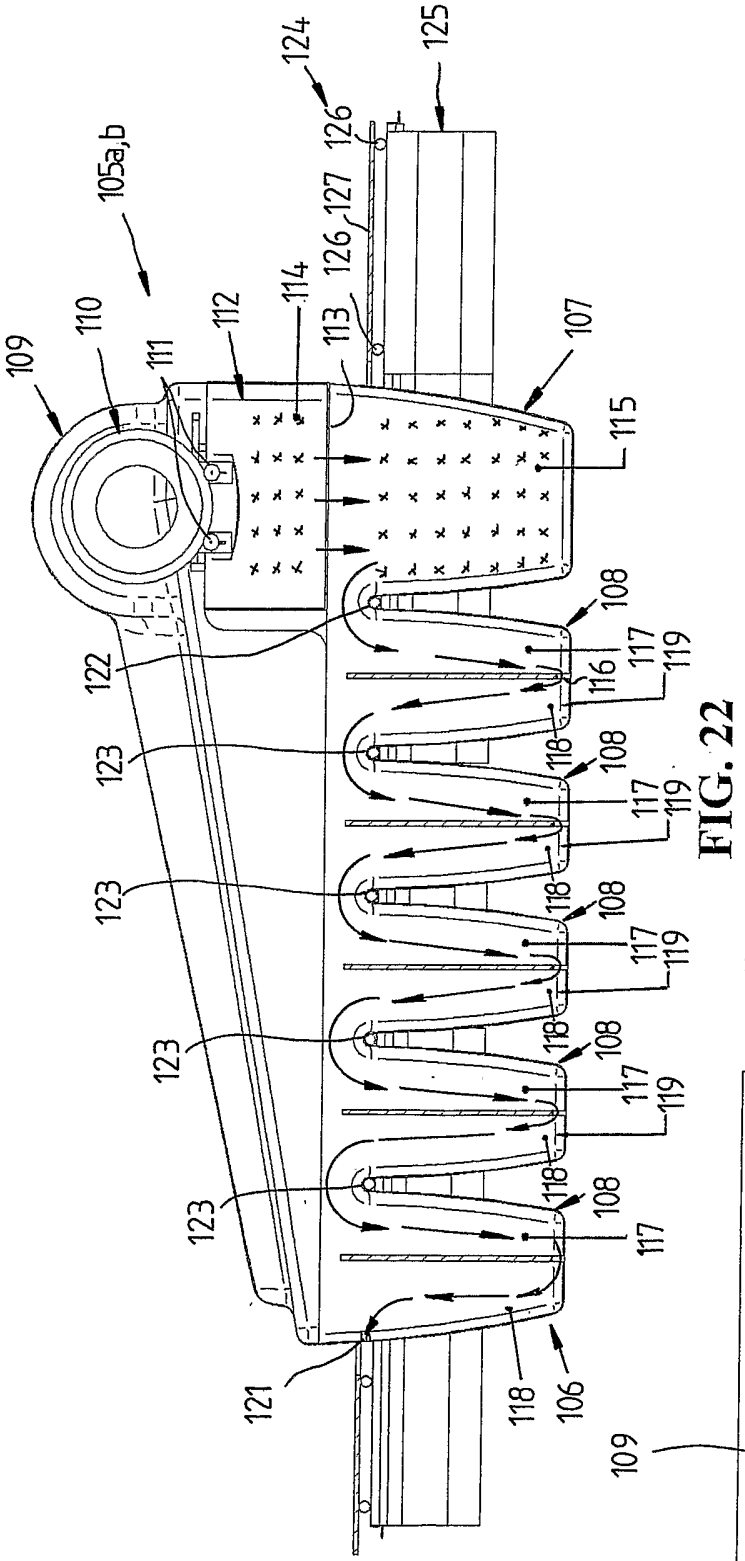
105a,b
109
110
111
112
114
113
124
125
126
127
107
115
108
117
119
116
118
122
123
121
106

FIG. 22

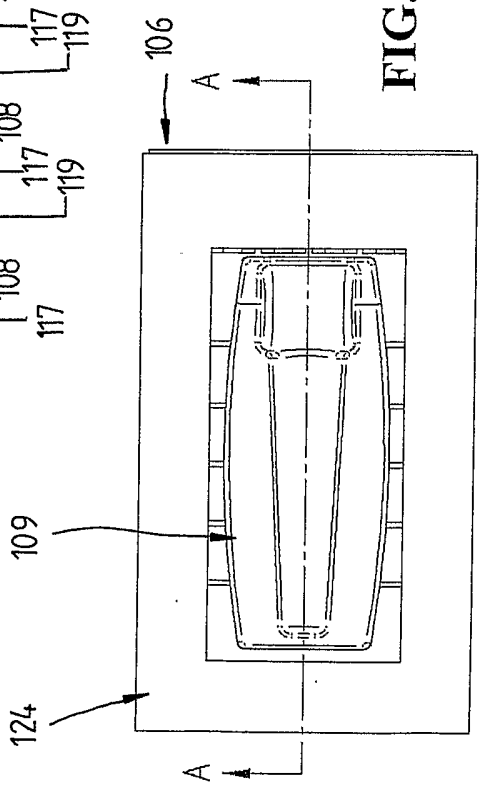
106
A
109
124
A

FIG. 21

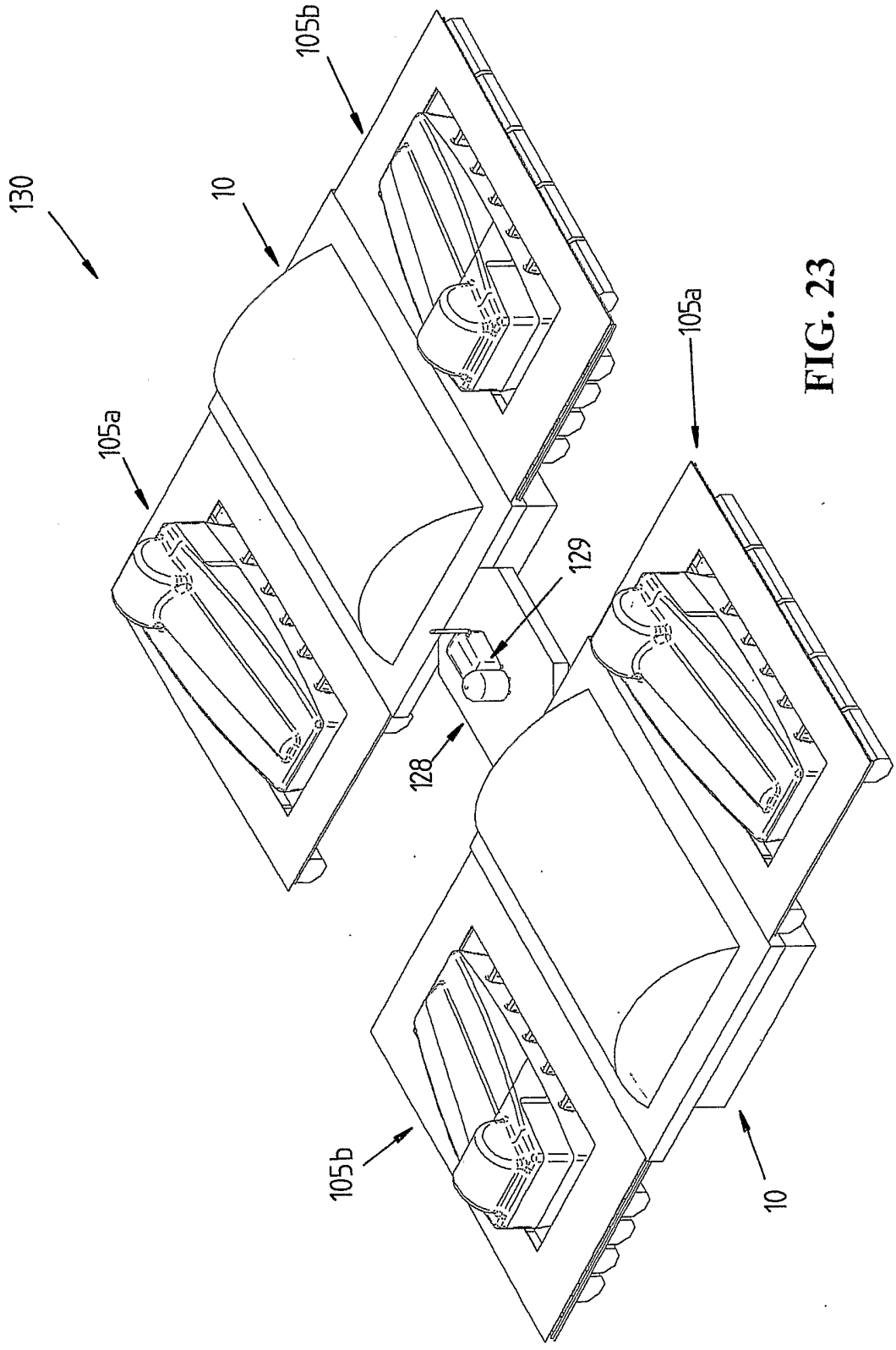

FIG. 23

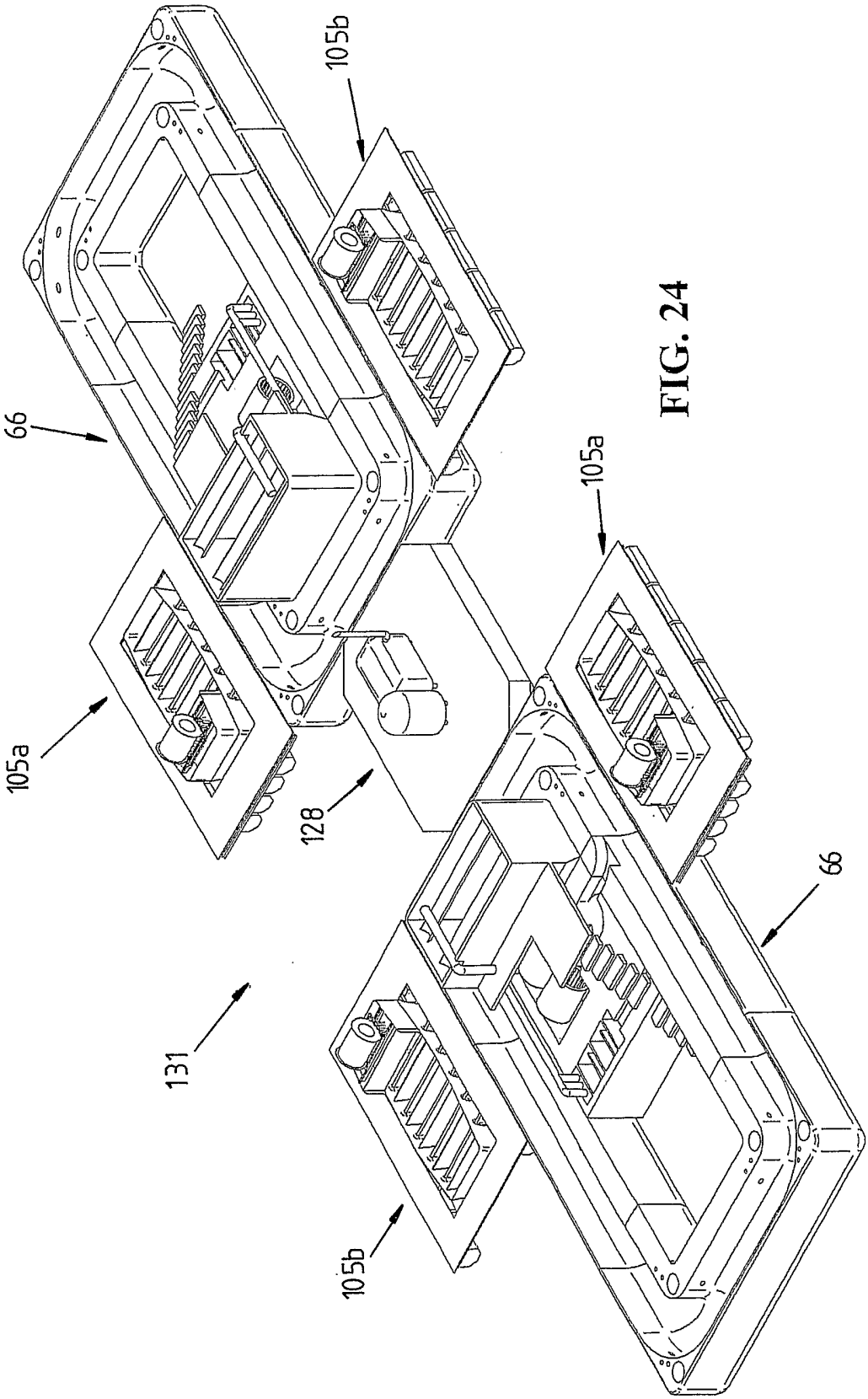

FIG. 24

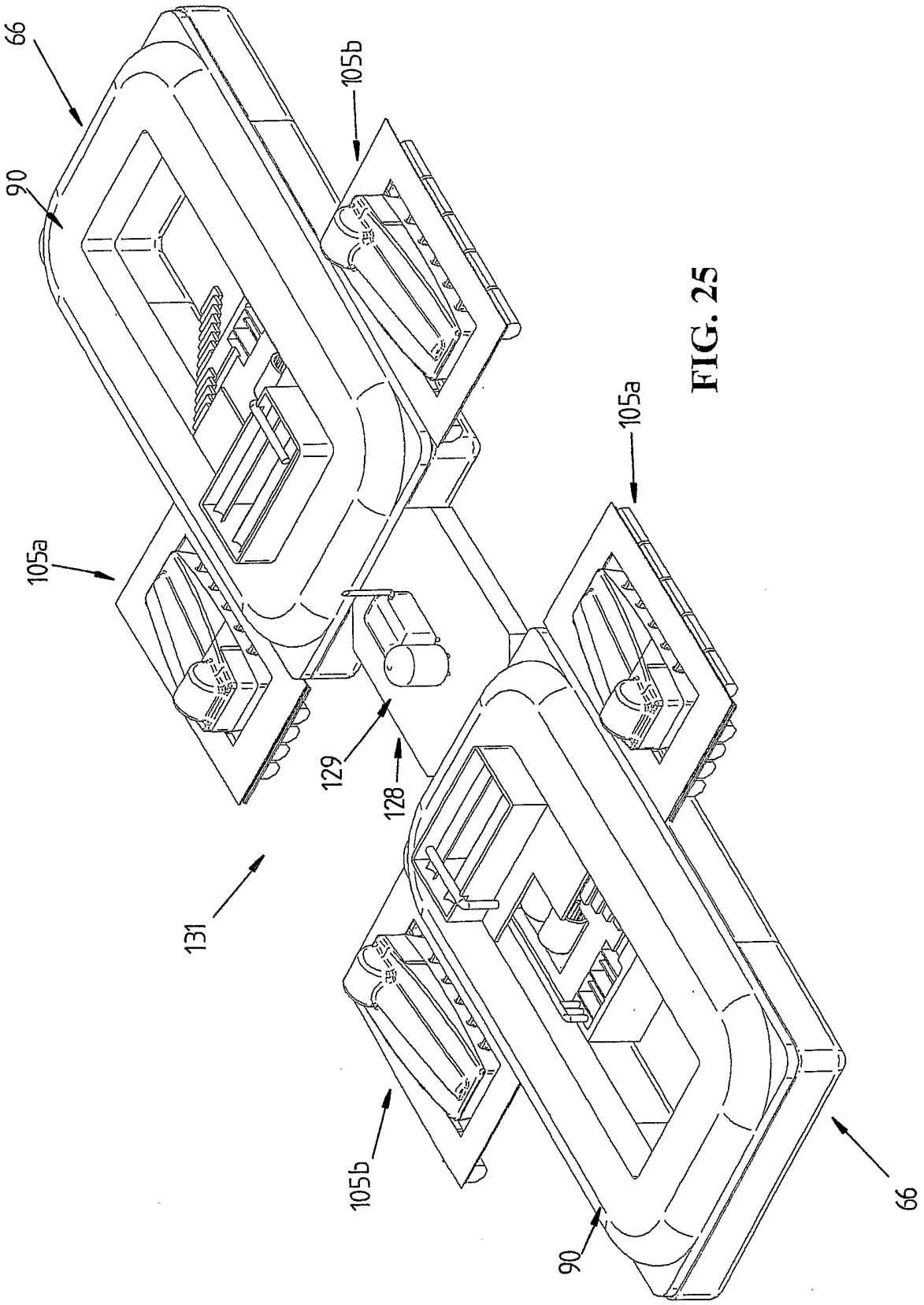

FIG. 25