(19) Europäisches Patentamt
European Patent Office
Office européen des brevets

(11) EP 0 738 602 B1

(12) EUROPEAN PATENT SPECIFICATION

(45) Date of publication and mention of the grant of the patent:
24.03.1999 Bulletin 1999/12

(51) Int. Cl.[6]: **B41J 2/045**

(21) Application number: **96106318.7**

(22) Date of filing: **22.04.1996**

(54) Ink jet print head

Tintenstrahlkopf

Tête à jet d'encre

(84) Designated Contracting States:
DE FR GB IT

(30) Priority: **21.04.1995 JP 97239/95**
21.04.1995 JP 97240/95
08.06.1995 JP 166971/95
08.06.1995 JP 166969/95
08.06.1995 JP 166970/95
05.04.1996 JP 110384/96

(43) Date of publication of application:
23.10.1996 Bulletin 1996/43

(73) Proprietor:
SEIKO EPSON CORPORATION
Shinjuku-ku Tokyo (JP)

(72) Inventors:
- **Morikoshi, Koji**
  Suwa-shi, Nagano (JP)
- **Kitahara, Tsuyoshi**
  Suwa-shi, Nagano (JP)
- **Momose, Kaoru**
  Suwa-shi, Nagano (JP)
- **Okazawa, Noriaki**
  Suwa-shi, Nagano (JP)
- **Yoshida, Masahiko**
  Suwa-shi, Nagano (JP)
- **Suzuki, Kazunaga**
  Suwa-shi, Nagano (JP)

(74) Representative:
Diehl, Hermann, Dr. Dipl.-Phys. et al
DIEHL, GLÄSER, HILTL & PARTNER
Patentanwälte
Augustenstrasse 46
80333 München (DE)

(56) References cited:

EP-A- 0 208 484	**EP-A- 0 271 905**
EP-A- 0 278 589	**EP-A- 0 354 706**
EP-A- 0 467 656	**EP-A- 0 531 173**
EP-A- 0 541 129	**EP-A- 0 548 984**
EP-A- 0 574 016	**EP-A- 0 580 154**
EP-A- 0 596 530	**EP-A- 0 608 835**
EP-A- 0 616 891	**EP-A- 0 648 606**
WO-A-94/26522	**WO-A-95/34427**
US-A- 4 972 211	**US-A- 5 146 236**

- **PATENT ABSTRACTS OF JAPAN vol. 009, no. 034 (M-357), 14 February 1985 & JP 59 176055 A (KONISHIROKU SHASHIN KOGYO KK), 5 October 1984,**
- **PATENT ABSTRACTS OF JAPAN vol. 015, no. 505 (M-1194), 20 December 1991 & JP 03 222750 A (RICOH CO LTD), 1 October 1991,**
- **PATENT ABSTRACTS OF JAPAN vol. 018, no. 173 (M-1581), 24 March 1994 & JP 05 338150 A (SEIKO EPSON CORP), 21 December 1993,**
- **PATENT ABSTRACTS OF JAPAN vol. 018, no. 502 (M-1676), 20 September 1994 & JP 06 171080 A (SEIKO EPSON CORP), 21 June 1994,**

Note: Within nine months from the publication of the mention of the grant of the European patent, any person may give notice to the European Patent Office of opposition to the European patent granted. Notice of opposition shall be filed in a written reasoned statement. It shall not be deemed to have been filed until the opposition fee has been paid. (Art. 99(1) European Patent Convention).

EP 0 738 602 B1

Description

[0001] The present invention relates to an ink jet print head as known from example from document EP-A1-0 548 984, the print head having an actuator which consists of a longitudinal vibration mode piezoelectric vibrator.

[0002] A high speed drive actuator for an ink jet print head expands and compresses a pressure generating chamber to suck in ink and to form ink droplets. The actuator is constructed with a piezoelectric vibrator having a longitudinal vibration mode, which is expandable in its axial direction and has a structure consisting of piezoelectric sheet-like members and conductive sheet-like members, alternately layered one on another. A part of the pressure generating chamber is formed with an elastic plate, and the chamber communicates with a nozzle hole associated therewith.

[0003] When the longitudinal vibration mode piezoelectric vibrator is compared with a piezoelectric vibrator of the type in which the surface thereof is bent for vibration, the former has a smaller contact area where it contacts with the pressure generating chamber than the latter, and may be driven at higher speed than the latter. Accordingly, the former is capable of performing the printing operation at a high speed and at high resolution.

[0004] While the longitudinal vibration mode piezoelectric vibrator may be driven at high speed, the attenuation rate of the residual vibration is small. As a result, a large vibration is left after an ink droplet is shot forth. The residual vibration affects the behavior of the meniscus. The position of the meniscus is indefinite when the next ink droplet is jet out. More particularly, the direction of the flying path of the ink droplet varies and the meniscus overshoots the nozzle hole, thereby causing ink mist. The result is deterioration of the print quality.

[0005] The present invention has been designed to overcome the problems noted above. The object is solved by the ink jet print head according to independent claims 1, 5 and 8.

[0006] Further advantages, features, aspects and details of the invention are evident from the dependent claims, the description and the accompanying drawings.

[0007] An aspect of the present invention is to provide an ink jet printing device which is driven at high speed while being free from the generation of ink mist and the bending of the flying path of the ink droplet.

[0008] A second aspect of the present invention is to provide an ink jet printing device which is capable of changing dot size while maintaining print quality.

[0009] A third aspect of the present invention is to provide an ink jet printing device which is driven at a preset drive frequency independently of the specifications of the print head and ambient temperature, and which is free from the generation of ink mist and the bending of a flying path of the ink droplet.

[0010] To solve the problems referred to above, the present invention comprises: an ink jet print head having pressure generating chambers each including a nozzle hole and each communicating with a common ink chamber, which has a Helmholtz resonance frequency of period TH, through an ink supplying path, and a piezoelectric vibrator for expanding and compressing said pressure generating chamber; and drive signal generating means for generating a first signal to expand said pressure generating chambers, a second signal to compress said pressure generating chamber being in an expanded state to compel said pressure generating chamber to shoot forth an ink droplet through said nozzle hole, and a third signal to expand said pressure generating chamber by a volume smaller than the volume expanded by said first signal when the vibration of the meniscus generated after the shooting of an ink droplet moves to the nozzle hole.

[0011] When the vibration of the meniscus generated by the shooting of an ink droplet moves toward the nozzle hole, the pressure generating chamber receives the third signal to minutely expand the pressure generating chamber to effectively attenuate the vibration of the meniscus, and to stay the meniscus at a position suitable for jetting out the next ink droplet.

[0012] The invention will be better understood by reference to the following description of embodiments of the invention taken in conjunction with the accompanying drawings.

Fig. 1 illustrates an ink jet print head used in an ink jet printing device according to the present invention.

Fig. 2 illustrates an embodiment of an ink jet printing device according to the present invention.

Fig. 3 is a block diagram of a control signal generating circuit in the ink jet printing device according to the present invention.

Fig. 4 illustrates an embodiment of a drive signal generating circuit in the ink jet printing device according to the present invention.

Figs. 5(a) to 5(h) are waveforms showing an operation of the ink jet printing device.

Fig. 6 is a diagram showing the parameters defining a drive signal.

Figs. 7(a) and 7(b) illustrate the behavior of a meniscus in connection with a drive signal.

Figs. 8(a) to 8(f) illustrate the behavior of a meniscus when a ratio of a second drive signal to the full drive voltage is varied.

Figs. 9(a) to 9(f) show waveforms for explaining another embodiment of the present invention.

Figs. 10(a) and 10(b) illustrate the behavior of a meniscus from an instant that an expansion of the pressure generating chamber starts until an ink droplet is shot forth.

Fig. 11 illustrates the variations of a flying speed and an amount of an ink droplet to a ratio of the discharging voltage to a minimum charging voltage.

Figs. 12(a) to 12(c) show a Helmholtz resonance frequency and the returning times of the meniscus after jetting out an ink droplet.

Fig. 13 illustrates the relationship between ambient temperature and the period of a Helmholtz resonance frequency.

Fig. 14 illustrates the relationship between ambient temperature and the timing of applying a third signal.

Fig. 15 illustrates another embodiment of the present invention.

Fig. 16 illustrates an embodiment of a drive signal generating circuit.

Figs. 17(a) to 17(f) illustrate a set of waveforms showing an operation of the drive signal generating circuit.

Figs. 18(a) to 18(c) illustrate a set of waveforms showing an operation of the drive signal generating circuit in one print cycle.

Fig. 19 illustrates an ink jet printing device to which the drive signal generating circuit shown in Fig. 16 is well adaptable.

Fig. 20 is a sectional view showing an additional embodiment of the print head to which a drive technique of the invention is applied.

Figs. 21(a) to 21(f) illustrate a set of waveforms for explaining a controlling method used when the drive signal generating circuit shown in Fig. 16 is used for driving the print head.

Fig. 22 is a block diagram showing another embodiment of a method of applying print data.

[0013] Fig. 1 illustrates an example of an ink jet print head used in the present invention. In Fig. 1, reference numeral 1 designates a nozzle plate; 7, a flow-path forming plate; and 8, an elastic plate. An ink flow path unit 11 is formed by tightly closing both sides of the flow-path forming plate 7 by the nozzle plate 1 and the elastic plate 8.

[0014] The ink flow path unit 11 includes the pressure generating chambers 3, the common ink chambers 4, and the ink supplying paths 5 connecting those chambers. The ink flow path unit 11 shoots forth ink droplets and sucks in ink when piezoelectric vibrators 9 extend and contract.

[0015] Each piezoelectric vibrator 9 is a longitudinal vibration mode vibrator having piezoelectric and conductive members, arranged in parallel and extended in the longitudinal direction, which are alternately layered. The top of the piezoelectric vibrator is brought into contact with the elastic plate 8 partly defining the pressure generating chamber 3, while the bottom is fastened to a base 10.

[0016] In the ink jet print head thus constructed, the Helmholtz resonance frequency FH of the pressure generating chamber 3 is expressed by:

$$FH = 1/2\pi \times \sqrt{\{(Mn + Ms)/(Ci + Cv)(Mn \times Ms)\}}$$

where Ci is the fluid compliance of the pressure generating chamber 3, caused by ink compression; Cv is the solid compliance of the members forming the pressure generating chamber 3, such as the elastic plate 8 and the nozzle plate 1; Mn is the innertance of the nozzle hole 2; and Ms is the innertance of the ink supplying path 5.

[0017] The fluid compliance Ci is given by the relation

$$Ci = V/\rho c$$

where V is the volume of the pressure generating chamber 3; ρ is the density of ink; and c is the sonic velocity in ink.

[0018] The solid compliance Cv of the pressure generating chamber 3 is equal to a static coefficient of strain of the pressure generating chamber 3 when a unit of pressure is applied to the pressure generating chamber 3.

[0019] In a specific example, the Helmholtz resonance frequency FH of a pressure generating chamber 3, the dimensions of which are 0.5 to 2 mm in length, 0.1 to 0.2 mm in width, and 0.05 to 0.3 mm in depth is 50 kHz to 200 kHz.

[0020] Fig. 2 illustrates a drive circuit for driving the ink jet print head. In Fig. 2, a control signal generating circuit 20 includes input terminals 21 and 22 and output terminals 23, 24 and 25. The control signal generating circuit 20 receives at the input terminals 21 and 22 a print signal and a timing signal from an external device for generating print data, and outputs a shift clock signal, a print signal and a latch signal at the output terminals 23, 24 and 25.

[0021] A drive signal generating circuit 26 receives a timing signal from the external device by way of terminal 22, and generates drive signals for transmission to the piezoelectric vibrators 9.

[0022] A group of flip-flops F1 forms a latch circuit. Another group of flip-flops F2 forms a shift register. The flip-flops F2 produce print signals corresponding to the piezoelectric vibrators 9, respectively. The print signals are latched by the flip-flops F1, respectively. Then, those signals are selectively applied to switching transistors 30 through OR gates 28.

[0023] Fig. 3 illustrates the control signal generating circuit 20. In Fig. 3, a counter 31 is initialized at the leading edge of a timing signal (Fig. 5(a)) received at the terminal 22, counts a clock signal received from an oscillator circuit 33 until

its count reaches the number of piezoelectric vibrators 9 that are connected to the output terminal 29 of the drive signal generating circuit 26, outputs a carry signal in LOW level, and stops the counting operation. The carry signal from the counter 31 is applied to an AND gate which in turn ANDs the carry signal and a clock signal coming from the oscillator circuit 33, and outputs the result as a shift clock signal to the terminal 23.

[0024] A memory 34 receives print data from terminal 21 and stores it therein. The print data consists of the number of bits that is equal to the number of piezoelectric vibrators 9. In addition, the memory 34 serially outputs the print data bit by bit to the terminal 24 in synchronism with a signal from the AND gate.

[0025] Print signals (Fig. 5(g)), serially output from terminal 24, become select signals for the switching transistors 30 in the next printing cycle. The select signals are latched in the flip-flops F1 of the shift register by a shift clock signal (Fig. 5(h)) output from terminal 23. A latch signal is output from a latch signal generating circuit 35 at the trailing edge of the carry signal. The latch signal is output when a drive signal to be output is kept at a medium potential VM.

[0026] Fig. 4 illustrates the drive signal generating circuit 26. A timing control circuit 36 includes three one-shot multivibrators M1, M2 and M3. Pulse widths PW1, PW2 and PW3 (Figs. 5(b)-5(d)) are set up in the one-shot multivibrators, respectively. The pulse widths are used to determine the sum T1 of a first charging time (Tc1) and a first hold time (Th1) ($T1 = Tc1 + Th1$), the sum T2 of a discharging time (Td) and a second hold time (Th2) ($T2 = Td + Th2$), and a second charging time (tc2).

[0027] The drive circuit 26 further includes a transistor Q2 for a charging operation, a transistor Q3 for a discharging operation, and a transistor Q6 for a second charging operation. The transistors are turned on and off at the leading edges and the trailing edges of the output pulses of the one-shot multivibrators M1, M2 and M3.

[0028] When a timing signal is input from the external device to the terminal 22, the one-shot multivibrator M1 of the timing control circuit 36 produces a pulse signal (Fig. 5(b)) of the pulse width PW1 (Tc1 + Th1), preset in the one-shot multivibrator M1. In response to the pulse signal, a transistor Q1 is turned on, so that a capacitor C, that was charged under the medium potential VM in an initial state, is charged by a constant current Ic1, determined by the transistor Q2 and a resistor R1. During the charging operation, the voltage across the capacitor C reaches a voltage VH of a power source. At this time, the charging operation automatically stops, and subsequently the capacitor is kept at this voltage until it is discharged.

[0029] When the time $(Tc1 + Th1) = T1$ corresponding to the pulse width PW1 of the one-shot multivibrator M1 elapses, the operation state of the one-shot multivibrator M1 is inverted. At this time, the transistor Q1 is turned off. The one-shot multivibrator M2 produces a pulse signal having pulse width PW2 (Fig. 5(b)), which turns on the transistor Q3 to discharge the capacitor C. The capacitor is discharged with a flow of a constant current Id determined by a transistor Q4 and a resistor R3, and the discharging operation is continued until the voltage across the capacitor decreases to be substantially equal to the voltage VL.

[0030] When the time $(Td + Th2) = T2$ corresponding to the pulse width PW2 of the one-shot multivibrator M2 elapses, the operation state of the one-shot multivibrator M2 is inverted. At this time, the one-shot multivibrator M3 produces a pulse signal having pulse width PW3 (Fig. 5(d)), which turns on the transistor Q6. Then, the capacitor C is charged again by a constant current Ic2. The voltage across the capacitor C is increased up to the medium potential VM, determined by a time (Tc2) corresponding to the pulse width PW3 of the one-shot multivibrator M3. When the capacitor voltage reaches the medium potential VM, the charging operation terminates.

[0031] Through the charging and discharging operations, the drive signal varies, as shown in Fig. 5(e), such that it rises from the medium potential VM to the voltage VH at a fixed gradient, the voltage VH is maintained for a fixed period Th1 of time, and falls to the voltage VL at a fixed gradient, the voltage VL is maintained for a fixed period Th2 of time, and rises to the medium potential VM.

[0032] The charging current Ic1, the discharging current Id, the charging current Ic2, the charging time Tc1, the discharging time Td, and the charging time Tc2 are given by:

$$Ic1 = Vbe2/Rr1;$$

$$Id = Vbe4/Rr3;$$

$$Ic2 = Vbe7/Rr2;$$

$$Tc1 = C0 \times (VM - VM)/Ic1;$$

$$Td = C0 \times (VM - VL)/Id;$$

$$Tc2 = C0 \times (VM - VL)/Ic2;$$

where C0 is the capacitance of the capacitor C in the drive signal generating circuit 26;

Rr1 is the resistance of the resistor R1;
Rr2 is the resistance of the resistor R2;
Rr3 is the resistance of the resistor R3;
Vbe2 is the voltage between the base and the emitter of the transistor Q2;
Vbe4 is the voltage between the base and the emitter of the transistor Q4;
Vbe7 is the voltage between the base and the emitter of the transistor Q7.

[0033] The longitudinal vibration mode piezoelectric vibrator 9 is used as the actuator for expanding/compressing the pressure generating chamber 3. In the print head of the type in which the Helmholtz resonance frequency of the pressure generating chamber 3 is increased for the purpose of high speed driving, a duration of the residual vibration of the piezoelectric vibrator 9, which follows the shooting of the ink droplet, is longer than the period TH of the Helmholtz resonance frequency, as described above. Accordingly, the meniscus is adversely affected by the residual vibration of the piezoelectric vibrator 9.

[0034] To suppress the residual vibration of the piezoelectric vibrator 9, in the present embodiment, the discharge time constant Td when the extension of the piezoelectric vibrator 9 is made to shoot forth the ink droplet, and the charge time constant Tc2 when the pressure generating chamber 3 is minutely expanded, are each selected to be equal to the period of the natural vibration of the piezoelectric vibrator 9. Further, the Helmholtz resonance frequency TH, the charging time constant Tc1, and the discharging time constant Td are selected so as to satisfy the following relations:

$$0.5Th < Tc1 < 2TH, \text{ preferably } Tc1 \fallingdotseq Td \fallingdotseq Ta, \text{ preferably } Td < TH, \text{ and}$$

$$Tc2 \fallingdotseq Ta, \text{ preferably } Tc2 < TH.$$

[0035] Further, V2/V1 = R2/1 is selected to be within a range from 0.1 to 0.5. In the ratio, V1 is a potential difference between a discharge voltage, i.e., a constant voltage set up after the charging operation ends, and a potential when the discharging operation ends, and V2 is a potential difference between a potential when the discharging operation ends and the medium potential VM.

[0036] The operation of the ink jet printing device will be described.

[0037] As described above, the control signal generating circuit 20 transfers select signals for selecting the switching transistors 30 to the flip-flops F1 in the preceding printing cycle, and the flip-flops F1 latch the received select signals during a period when all of the piezoelectric vibrators 9 are being charged to the medium potential VM. Thereafter, a timing signal is applied, the drive signal shown in Fig. 5(e) increases from the medium potential VM to the voltage VH, to charge the piezoelectric vibrator. During charging, the piezoelectric vibrator 9 contracts at a fixed rate to expand the pressure generating chamber 3.

[0038] When the pressure generating chamber 3 expands, ink flows from the common ink chamber 4 to the pressure generating chamber 3 by way of the ink supplying path 5, while at the same time the meniscus in the nozzle hole 2 is pulled to the pressure generating chamber 3. The drive signal increases to the voltage VH and is kept at the voltage VH for a preset period of time Th1, and then decreases to the potential VL. When the drive signal decreases to the potential VL, each of the piezoelectric vibrators 9, which were charged and have been kept at the potential VH, is discharged through the diode D associated therewith, so that the piezoelectric vibrator 9 extends to compress the pressure generating chamber 3 associated therewith. The pressure generating chamber 3 is compressed and ink contained therein is shot forth in the form of an ink droplet, through the nozzle hole 2. Thereafter, the meniscus in the nozzle hole 2 starts to vibrate.

[0039] In the present embodiment, when the vibration of the meniscus is pulled to the pressure generating chamber 3 in the extreme, and reverses its course to the nozzle hole 2, the drive signal increases again from the potential VL to the medium potential VM. As a result, the piezoelectric vibrator 9 is charged again, and the pressure generating chamber 3 is minutely expanded. By the minute expansion of the pressure generating chamber 3, the meniscus that reversed its course to the nozzle hole is once again pulled to the pressure ganerating chamber 3. The meniscus loses its kinetic energy and its vibration is rapidly attenuated.

[0040] Thus, to suppress the vibration of the meniscus generated after an ink droplet is jet out, it is desirable to apply a force to the ink in the pressure generating chamber 3 in a direction which is opposite to the moving direction of the meniscus. Accordingly, it is preferable to set the timing of the minute expansion of the pressure generating chamber 3, caused by a third signal ((3) in Fig. 7), at a time point (t2 in Fig. 7) where the minute vibration of the meniscus generated after ink is shot forth starts to move to the nozzle hole.

[0041] Ink in the pressure generating chamber 3 starts to vibrate when a second signal ((2) in Fig. 7) is applied to the piezoelectric vibrator 9 and the pressure generating chamber 3 is compressed. Therefore, the timing of applying the third signal ((3) in Fig. 7) is preferably *set* such that $Td + th2 \fallingdotseq TII \times n$ (n is an integer equal to or larger than 1). The suppression of the vibration in the earliest possible stage, e.g., in a stage where the meniscus lies at the back of the

pressure generating chamber 3, will be effective in preventing generation of ink mist by the vibration of the meniscus and in reducing a time up to the next shooting of ink. Therefore, the timing of applying the third signal (3) is preferably set at a time point where n = 1, the smallest value.

[0042] A relative magnitude of the minute expansion of the pressure generating chamber 3, a ratio R2/1 of the charging voltage V2 by the third signal (3) and the discharging voltage V1 to shoot forth the ink droplet, is preferably 0.1 to 0.5, more preferably 0.2 to 0.4.

[0043] When the third signal (3) is not applied, a time Tr1, shown in Fig. 8(a), of free vibration of the meniscus, which is generated after the ink droplet is shot forth, to return to a position suitable for jetting out the next ink droplet, (a position near to the opening of the nozzle hole) is very short. In this case, the meniscus greatly projects from the opening of the nozzle hole (as indicated by cross hatching in Fig. 8(a)). Accordingly, ink mist generated by the kinetic energy of the meniscus tends to occur.

[0044] when the voltage V2 of the third signal (3) is varied to be equal to the discharging voltage V1, the meniscus is greatly pulled to the pressure generating chamber 3 as shown in Fig. 8(f). Accordingly, ink mist generation is prevented. In this case, however, a time tr6 for the meniscus vibration to reach the position for the next ink droplet is considerably long. This fact necessitates the lowering of the drive frequency.

[0045] When the ratio R2/1 is set at approximately 0.1 on the basis of the above results, the meniscus vibrating in free vibration mode is pulled to the pressure generating chamber as shown in Fig. 8(b). Accordingly, the kinetic energy of the meniscus is reduced, the generation of ink mist is prevented, and a time tr2 for the meniscus to return to the position for the next ink droplet is reduced.

[0046] When the ratio R2/1 is stepwise increased to 0.3, 0.5, and 0.7, the vibration of the meniscus is rapidly reduced as shown in Figs. 8(c), 8(d), and 8(e). In this case, however, the meniscus is greatly pulled to the pressure generating chamber. Accordingly, times tr3, tr4 and tr5 for the meniscus to return to the position for the next ink droplet are increased.

[0047] From the foregoing, it is seen that if the voltage ratio R2/1 of the drive signal is set in the range from 0.1 to 0.5, preferably 0.2 to 0.4, a high frequency response of 10 kHz or higher is obtained. In addition, ink mist generation can be prevented and the printing speed can be improved.

[0048] As already referred to, the meniscus in the nozzle hole 2 is pulled to the pressure generating chamber at a speed proportional to an expanding rate of the pressure generating chamber 3, and reverses its course at the position where it is pulled in the extreme and returns to the nozzle hole 2 while vibrating. This phenomenon is shown in Figs. 10(a) and 10(b).

[0049] In Figs. 10(a) and 10(b), there is graphically illustrated a relationship of a drive signal to expand the pressure generating chamber 3 by contracting the piezoelectric vibrator 9 and a quantity of the movement of the meniscus pulled at that time. In Figs. 10(a) and 10(b), a solid line indicates a motion of the meniscus when the voltage of the drive signal is increased from a medium potential VM1 to the voltage VH, and a one dot chain line indicates a motion of the meniscus when the drive signal voltage is increased from a voltage VM2 higher than the voltage VM1, to the voltage VH.

[0050] As indicated by m1 and m2 in Fig. 10(b), the amount of the movement of the pulled meniscus after a preset time T1 elapses from the start of the expansion of the pressure generating chamber 3 is proportional to the amount of an expansion of the pressure generating chamber 3. Therefore, if the pressure generating chamber 3 is compressed at a fixed timing, the meniaci are located at positions indicated by distances D1 and D2 at a time point where an ink droplet is shot forth.

[0051] When the voltage of the drive signal is increased from the medium potential VM1 to the voltage VH, at the time of shooting forth the ink droplet, the meniscus lies at a position located apart from the nozzle hole 2 by long distance D1. Accordingly, an amount of ink of the droplet is small, so that a small dot is formed on a print sheet. When the voltage of the drive signal is increased from the medium potential VM2 to the voltage VH, at the time of shooting forth the ink droplet, the meniscus lies at a position located apart from the nozzle hole 2 by short distance D2. Accordingly, an amount of ink of the droplet is large, so that a large dot is formed on a print sheet. From this fact, it is seen that the dot size can be adjusted by varying the medium potential of the drive signal and accordingly the amount of the ink of the droplet.

[0052] Another embodiment of the present invention, designed so as to be able to adjust the size of dots to be formed on a recording medium by actively utilizing the above phenomenon, is shown in Figs. 9(a)-9(f). This embodiment uses a drive means having substantially the same functions as those already mentioned referring to Figs. 2 to 4. However, the one-shot multivibrator M3 in the timing control circuit 36 has additionally an adjusting function to variably set the time constant thereof by an external signal in order that a host device can adjust the pulse width of the output signal of the multivibrator.

[0053] In the present embodiment, when receiving a timing signal, the expansion of the pressure generating chamber 3 starts. After a time period T1 elapses from the start of the chamber expansion, the pressure generating chamber 3 is compressed to shoot forth an ink droplet. A sequence of the above operations of the embodiment is as described above. At a time point where the vibration of the meniscus, generated with the shooting of the ink droplet, reverses its

course to the nozzle hole, the one-shot multivibrator M3 operates to increase the voltage of the drive signal from the voltage VL to the medium potential and to minutely expand the pressure generating chamber 3.

[0054] At this time, the pulse width of the output signal of the one-shot multivibrator M3 is adjusted to determine the size of a dot to be printed in the next printing cycle. The voltage of the medium potential VM is proportional to the pulse width of the output signal of the one-shot multivibrator M3. Accordingly, by controlling the pulse width of the output signal of the one-shot multivibrator M3 by a signal from the host device, the medium potential in the producing of the next ink droplet, i.e., a charge start voltage of the piezoelectric vibrator 9, is adjusted to voltages VH1 and VH2, and consequently the size of a dot to be printed on a recording medium can be changed as desired.

[0055] Fig. 11 graphically shows variations of the weight and the flying speed of an ink droplet when the medium potential VM is varied, specifically a ratio R2/1 of the medium potential VM to the voltage V1 to shoot forth an ink droplet is varied in the range from 0.18 to 0.33. As seen from the graph, the variation of the flying speed of the ink droplet is extremely small; that is, the flying speed increased approximately 1.06 times, in the range from 7.5 m/s to 8.0 m/s. In other words, the flying speed takes a substantially fixed value irrespective of the medium potential VM. However, the variation of the amount of ink of the droplet is large. The amount of ink increased 1.2 times, in the range from 0.046 to 0.056.

[0056] The foregoing demonstrates that the size of the dot to be printed on the print paper can be controlled as desired without varying the landing position of the ink droplet and generating ink mist, when the ratio R2/1 is adjusted by varying the pulse width PW3 of the output signal of the one-shot multivibrator M3.

[0057] A third embodiment of the invention which actively utilizes the timing control circuit 36 so as to keep the print quality satisfactory irrespective of the specifications of the print head and variations of ambient temperature, will be described. As described above, when an ink droplet is jet out, the meniscus in the nozzle hole 2 vibrates as shown in Fig. 7(a). The frequency of the vibration of the meniscus is determined by the frequency FH of the Helmholtz resonance. The frequency FH depends on the tolerances in manufacturing the print heads and the physical properties of ink.

[0058] For this reason, even if the print heads are manufactured according to the same specifications, the Helmholtz resonance frequency of the print heads is frequently different for every lot. This problem can be solved by conforming the pulse width PW2 of the output signal of the timing adjusting means, e.g., the one-shot multivibrator M2 in the present embodiment, in the control unit assembled into the printing device, to the Helmholtz resonance frequency of each print head.

[0059] Specifically, when the Helmholtz resonance frequency varies, times T21, T22 and T23, each from a discharge start point t1 until the meniscus returns to the nozzle hole 2, are minutely different as shown in Figs. 12(a), 12(b) and 12(c). If the time is finely adjusted in each print head so that when the vibration of the meniscus reaches the optimum position, the operation state of the one-shot multivibrator M2 is inverted, then the pressure generating chamber 3 is minutely expanded in the next stage. Accordingly, the kinetic energy of ink in the pressure generating chamber 3 is properly reduced, to thereby prevent the generation of ink mist.

[0060] In other words, the pressure generating chamber can be minutely expanded always at the optimum timing in such a simple manner that a time point of applying the third signal is properly adjusted for every print head by the pulse width PW2 of the output signal of the one-shot multivibrator M2. Even if the print heads are not uniform in the Helmholtz resonance frequency FH, the print heads may be driven at the same drive frequency without deteriorating the print quality.

[0061] Dimensions and elastic modulus of the print head, and the physical properties of ink vary depending on ambient temperature. Accordingly, the frequency FH of the Helmholtz resonance is also dependent largely on ambient temperature.

[0062] Samples of print heads were picked up from a number of manufactured print heads, and the temperature dependency of the period TH of the Helmholtz resonance frequency of each sample was investigated. As shown in Fig. 13, the periods of the Helmholtz resonance frequencies (these period values are indicated with marks *, △, ◯, □ and X) were varied with temperature. No difference was confirmed in the rate of change of the frequency FH of the Helmholtz resonance among the print heads. Further, variations of the rates of change of the frequencies FH of the print heads with respect to temperature were similar.

[0063] As shown in Fig. 14, the time T2 from an instant that the discharging operation starts to jet an ink droplet until the third signal (signal (3) in Fig. 7) is applied is adjusted in accordance with ambient temperature. By adjusting this time, the pressure generating chamber 3 may be expanded again at a time point where the kinetic energy of the meniscus going to the nozzle hole may be effectively attenuated. Accordingly, the generation of ink mist can reliably be prevented irrespective of ambient temperature.

[0064] Fig. 15 shows an embodiment of the invention which is capable of adjusting the time of applying the third signal in accordance with ambient temperature. In the embodiment, a signal output from a temperature detecting means 38 is input to the one-shot multivibrator M2 in the timing control circuit 36, to thereby control the pulse width PW2 of the pulse signal output from the one-shot multivibrator M2.

[0065] The embodiment is capable of adjusting the time of starting a minute expansion of the pressure generating chamber 3 in accordance with ambient temperature, in response to a signal output from the temperature detecting means 38. Accordingly, the kinetic energy of the meniscus is attenuated with certainty irrespective of a variation of ambient temperature, and hence a stable jetting of the ink droplet is attained.

[0066] No print signal is present and hence the piezoelectric vibrators 9 are connected to the switching transistors 30 being in a nonconductive state, and the vibrators start their discharge when the voltage of the drive signal drops below the medium potential VM during the course of the voltage decreasing of the drive signal from the voltage VH to the potential VL. Then, the pressure generating chamber 3 is minutely compressed.

[0067] An output signal of the one-shot multivibrator M3, which is inverted in signal level by an invertor 37, makes all of the switching transistors 30 active through the OR gates 28. As a consequence, the piezoelectric vibrators 9, not involved in the printing operation, minutely expand and compress the pressure generating chambers 3 to such an extent as not to jet ink droplets. The minute vibration causes an agitation of the ink in a region near the nozzle hole and the ink in the pressure generating chamber, which minimizes the increase of viscosity of the ink in the nozzle hole 2, and hence elongates the time up to the clogging of the nozzle hole with ink.

[0068] Fig. 16 shows another embodiment of the drive signal generating circuit 26. A constant current circuit 40 is made up of transistors Q111, Q112 and Q113, and resistors R111 to R117. The constant current circuit receives a signal of high level at the input terminal IN101 and operates in response to the signal, and outputs a current I1, which is determined by resistance r111 of the resistor R111 and a base-emitter voltage VBE111 of the transistor Q111, given by

$$I1 = VBE111/r111.$$

A capacitor C101 is charged by the current I1.

[0069] When the capacitor C101 is charged by the current I1, the voltage across the capacitor C101 increases at a gradient given by

$$dV/dt = I1/c101$$

where c101 is the capacitance of the capacitor C101.

[0070] A second constant current circuit 41 is made up of transistors Q121 to Q123, and resistors R121 to R127. The second constant current circuit 41, like the first constant current circuit 40, receives an input signal at the input terminal IN102 and feeds a fixed charging current to the capacitor C101.

[0071] A third constant current circuit 42 is made up of transistors Q131 and Q132, and resistors R131 to R135. The third constant current circuit is a constant current circuit of the sink type which operates in response to a signal of high level, which is received at the input terminal IN103 of the constant current circuit. The capacitor C101 is discharged through the resistor R131. At this time, a discharging current I3 is defined by

$$I3 = VBE131/r131$$

where r131 is resistance of the resistor R131; and

VBE131 is base-emitter voltage of the transistor Q131.

[0072] When the capacitor C101 is discharged, the voltage across the capacitor C101 decreases at a gradient given by

$$dV/dt = I3/c101$$

where c101 is the capacitance of the capacitor C101.

[0073] A fourth constant current circuit 43 is made up of transistors Q141 and Q142, and resistors R141 to R145. Like the third constant current circuit 42, the fourth constant current circuit 43 is a constant current circuit of the sink type. Thus, the capacitor C101 is charged and discharged by the currents of the first to fourth constant current circuits. A voltage across the capacitor C101 is applied to a current buffer 44 composed of transistors Q101 to Q104, and is output at the terminal OUT101 thereof in the form of a drive signal. The drive signal is applied to the piezoelectric vibrators 9.

[0074] The operation of the drive signal generating circuit thus constructed will be described with reference to Figs. 17(a)-17(f).

[0075] In a print preparation phase of the printing device, a signal that keeps a high level for a preset period t1 of time is input to the input terminal IN101. Then, the constant current circuit 40 feeds the current I1 to the capacitor C101. By the current I1, the capacitor C101 is charged and a voltage at the output terminal OUT101 is increased to the medium potential VM with time, and a first signal is output. After time t1, the signal at the input terminal IN101 goes low, the charging of the capacitor C101 is stopped, and subsequently the output voltage is kept at the medium potential VM.

[0076] In this state, the device operation enters a print phase. Then, a signal of high level is applied to the input terminal IN102 for time t2, longer than a time necessary for the voltage across the capacitor C101 to increase from the medium potential VM to the power source voltage VH. Accordingly, the voltage of the drive signal is increased from the medium potential VM to a voltage approximate to the power source voltage VH, and subsequently the voltage approximate to the power source voltage VH is sustained. As a result, the pressure generating chamber 3 is expanded by a volume corresponding to a potential difference between the medium potential VM and the power source voltage VH.

[0077] In synchronism with the jetting out of an ink droplet, a signal of high level is input to the input terminal IN103 for time t3, longer than a time necessary for the voltage across the capacitor C101 to drop to about 0 V. Accordingly, the drive signal is decreased to about 0 V, and a third signal is generated.

[0078] Thereafter, at a time point where the motion of the meniscus caused after the jetting out of the ink droplet is completed, the high level signal of time t1 is input to the input terminal IN101. Then, the voltage of the drive signal is increased up to the medium potential VM, and a third signal is generated. By the third signal, the pressure generating chamber 3 is minutely expanded, and the meniscus is pulled to the pressure generating chamber.

[0079] Subsequently, in the print phase of the printing device, the first, second and third signals are output every print signal.

[0080] After printing one line, a signal of high level is applied to the input terminal IN104 for time t4, longer than a time necessary for the voltage across the capacitor C101 to drop to 0 V. The voltage of the drive signal drops to about 0 V. Since the voltage drop minutely compresses the pressure generating chamber 3, the fourth constant current circuit 43 is designed to have such a time constant as to fail to shoot forth ink. The voltage gently drops.

[0081] Figs. 18(a)-18(c) show timing charts of a printing operation of the ink jet printing device, which uses the drive signal generating circuit just described. In the print preparation phase, as referred to above, during the period that the drive voltage rises from 0 V to the medium potential VM, an all-output-on signal is rendered high, so that all of the bidirectional switching transistors 30' (Fig. 19) are turned on. In this state, irrespective of print data, the medium potential VM is applied to all of the piezoelectric vibrators 9 to charge the vibrators up to the medium potential VM.

[0082] In a normal print phase, when the all-output-on signal is in an on state, the drive signal is applied to specific piezoelectric vibrators 9 through the bidirectional switching transistors 30', which were selectively rendered conductive by print data 1 to n, to thereby charge these vibrators. The piezoelectric vibrators 9, not selected, are not charged and remain at the medium potential VM.

[0083] At the start and the end of one print period of one print cycle, the all-output-on signal is turned on at least one time during a period that the drive signal is kept at the medium potential VM. By turning on the all-output-on signal in this manner, those piezoelectric vibrators which have not been driven for a long time, resulting in a decrease from the medium potential VM because of discharge, are charged again to increase the reduced medium potential. That is, each piezoelectric vibrator is refreshed.

[0084] In a print end phase, when the drive signal voltage drops from the medium potential VM to about 0V, the all-output-on signal goes high. As a result, the residual charge in all of the piezoelectric vibrators 9 are completely discharged, and the voltage across each piezoelectric vibrator 9 is at 0 V, to thereby prevent the generation of fine ink droplets, which results from unwanted expansion and compression of the piezoelectric vibrator caused by noise.

[0085] Rates of change of the voltage variations of the first signal that increases from the medium potential VM to the voltage VH, the second signal that decreases from the voltage VH to 0 V, and the third signal that increases from about 0 V to the medium potential VM, can be set individually. Accordingly, the drive signal may be more properly set so as to conform to the characteristics of the print heads. In the embodiment shown in Fig. 16, the signal generating circuit for generating the signals to be input to the input terminals IN101 to IN104 is not referred to. It is readily seen, however, that the signal generating circuit may be constructed with one-shot multivibrators connected in a cascade fashion as shown in Fig. 4.

[0086] In the embodiments described above, the invention is applied to an ink jet printing device which jets out ink droplets when the pressure generating chamber is expanded and contracted in response to the charging and discharging of the piezoelectric vibrator. It is evident that the invention may be applied to a print head using a piezoelectric vibrator 54 as shown in Fig. 20. The piezoelectric vibrator 54 consists of piezoelectric sheet-like members 51 and electrode sheet-like members 52 and 53, alternately layered one on another in the vibration direction, as shown in Fig. 20. The piezoelectric vibrator 54 is expanded when charged and compressed when discharged.

[0087] In this case, signals are input to the input terminals IN101 to IN104 at the timings as shown in Figs. 21(a)-21(f).

[0088] In the embodiments described above, control data is serially transferred to the switching transistors 30 for driving the piezoelectric vibrators. Where the number of piezoelectric vibrators of the print head is not large, a circuit arrangement as shown in Fig. 22 may be used. In the circuit, the drive signals are output to the piezoelectric vibrators by directly inputting print data and the all-output-on signal to the control gates of the switching transistors 30, and the serial-parallel converting means, for example, so that the shift register is not used.

[0089] In the above-mentioned embodiments, the timings of outputting the signals are controlled by the one-shot multivibrators. It is apparent, however, that any other suitable timing control means, for example, a microcomputer, may be

used for the same purpose.

[0090] As described above, the present invention includes drive signal generating means for generating a first signal to expand the pressure generating chambers, a second signal to compress the pressure generating chamber being in an expanded state to compel the pressure generating chamber to shoot forth an ink droplet through the nozzle hole, and a third aignal to expand the pressure generating chamber by a volume smaller than the volume expanded by the first signal when the vibration of the meniscus generated after the shooting of an ink droplet moves to the nozzle hole. Therefore, the meniscus going to the nozzle hole for jetting out the ink droplet is pulled back by the expansion of the pressure generating chamber, to thereby effectively attenuate the vibration of the meniscus. Accordingly, the generation of ink mist caused by the kinetic energy of the meniscus can be prevented. The meniscus for jetting out the next ink droplet is stayed at a proper position, so that the flying of the ink droplet is stabilized.

Claims

1. An ink jet print head comprising:

   pressure generating chambers (3), each of said pressure generating chambers (3) having a Helmholtz resonance frequency of period TH and communicating with a common ink chamber (4) via an ink supply path (5);
   nozzle holes (2) respectively corresponding to said pressure generating chambers (3); and
   piezoelectric vibrators (9) for expanding and compressing said pressure generating chambers (3), respectively; and
   drive signal generating means (26), connected to said piezoelectric vibrators (9), for generating a first signal to expand said pressure generating chambers (3), a second signal for compressing said pressure generating chambers (3) being in an expanded state to jet out ink droplets from respective nozzle holes (2), characterized in that the drive signal generating means (26) generates a third signal, for expanding said pressure generating chambers (3), by a volume smaller than a volume produced in response to said first signal, and at a time when a meniscus generated after jetting out each ink droplet moves toward an associated nozzle hole (2).

2. The ink jet print head according to claim 1, wherein the amplitude of said third signal is 0.1 to 0.5 times the amplitude of said second signal, preferably 0.2 to 0.4 times the amplitude of said second signal.

3. The ink jet print head according to claim 1 or 2, wherein an active state time duration of said first signal is substantially equal to said period TH of said Helmholtz resonance frequency.

4. The ink jet print head according to one of claims 1 to 3, wherein an active time duration of said third signal is substantially equal to the period of natural vibration of said piezoelectric vibrators (9).

5. An ink jet print head comprising:

   pressure generating chambers (3), each of said pressure generating chambers (3) having a Helmholtz resonance frequency of period TH and communicating with a common ink chamber (4) via an ink supply path (5);
   nozzle holes (2) respectively corresponding to said pressure generating chambers (3); and
   piezoelectric vibrators (9) for expanding and compressing said pressure generating chambers (3), respectively;
   drive signal generating means (26), connected to said piezoelectric vibrators (9), for generating a first signal to expand said pressure generating chambers (3) for a time substantially equal to said period TH of said Helmholtz resonance frequency, a second signal for compressing said pressure generating chambers (3), each being in an expanded state, to jet out ink droplets from respective nozzle holes (2) after a predetermined time from the output of said first signal, characterized in that the drive signal generating means (26) generates a third signal, for expanding said pressure generating chambers (3) by a volume smaller than a volume produced in response to said first signal, at a time when a meniscus generated after jetting out each ink droplet moves toward an associated nozzle hole (2); and
   means for adjusting a ratio of the amplitudes of said first signal and said third signal.

6. The ink jet print head according to claim 5, wherein said ratio is adjusted by an active state time duration of said third signal.

7. The ink jet print head according to one of the preceding claims, wherein said drive signal generating means (26) comprises:

a timing control circuit (36);
charging means connected to said timing control circuit (36);
discharging means connected to said timing control circuit (36);
a capacitor connected to both said charging means and said discharging means; and
an output terminal (29) for outputting said first signal, said second signal and said third signal.

8. An ink jet print head comprising:

pressure generating chambers (3), each of said pressure generating chambers (3) having a Helmholtz resonance frequency of period TH and communicating with a common ink chamber (4) via an ink supply path (5);
nozzle holes (2) respectively corresponding to said pressure generating chambers (3); and
piezoelectric vibrators (9) for expanding and compressing said pressure generating chambers (3), respectively;
drive signal generating means (26), connected to said piezoelectric vibrators (9), for generating a first signal to expand said pressure generating chambers (3), a second signal for compressing said pressure generating chambers (3), each being in an expanded state, to jet out ink droplets from respective nozzle holes (2) after a predetermined time from the output of said first signal, characterized in that the drive signal generating means (26) generates a third signal, for expanding said pressure generating chambers (3) by a volume smaller than a volume produced in response to said first signal, at a time when a meniscus generated after jetting out each ink droplet moves toward an associated nozzle hole (2); and
means for adjusting a time period (36) between termination of supply of said second signal to initiation of supply of said third signal.

9. The ink jet print head according to claim 8, wherein the amplitude of said third signal is 0.2 to 0.4 times the amplitude of said second signal.

10. The ink jet print head according to one of the preceding claims, wherein an active state time duration of said third signal is shorter than said period TH of said Helmholtz resonance frequency.

11. The ink jet print head according to one of the preceding claims wherein an active state time duration of said third signal is substantially equal to an active state time duration of said second signal.

12. The ink jet print head according to one of the preceding claims, wherein a time difference from an output of said second signal to an output of said third signal is substantially equal to said period TH of said Helmholtz resonance frequency.

13. The ink jet print head according to one of the preceding claims, wherein an active state time duration of said second signal is substantially equal to the period of natural vibration of said piezoelectric vibrators (9).

14. The ink jet print head according to one of the preceding claims, wherein an active state time duration of said third signal is substantially equal to the period of natural vibration of said piezoelectric vibrators (9).

15. The ink jet print head according to one of the preceding claims, wherein output timing of said third signal is controlled in accordance with ambient temperature.

16. The ink jet print head according to one of the preceding claims, wherein output timing of said third signal is controlled in accordance with ambient temperature so that said output timing coincides with a timing when vibration of said meniscus in each nozzle hole (2) moves to a position closest to an associated one of said pressure generating chambers (3).

17. The ink jet print head according to one of the preceding claims further comprising:

a control signal generating means (20) for generating a latch signal, a print signal and a shift clock signal; and/or
a plurality of first flip-flops (F2), respectively corresponding to said piezoelectric vibrators (9), which receive said shift clock signal and said print signal, each of said plurality of first flip-flops (F2) outputting a print signal; and/or
a plurality of second flip-flops (F1), respectively coupled to said piezoelectric vibrators (9), each of said second

flip-flops (F1) receiving said print signal from an associated one of said first flip-flops (F2) and further receiving said latch signal; each of said second flip-flops (F1) outputting a control signal; and/or

a plurality of switching transistors (30) each receiving said control signal output by an associated one of said second flip-flops (F1) for controlling activation of respective ones of said piezoelectric vibrators (9); and/or wherein said first flip-flops (F2) form a shift register and said second flip-flops (F1) form a latch circuit such that said print signals from said first flip-flops (F2) are latched by said second flip-flops (F1), respectively.

18. The ink jet print head according to one of the preceding claims, further comprising:

a plurality of OR gates (28) connected to said drive signal generating means (26) and to respective ones of said second flip-flops (F1), wherein said switching transistors (30) are selectively activated by output signals from said OR gates (28).

19. The ink jet print head according to one of claims 8 to 18, wherein said drive signal generating means comprises:

a timing control circuit (36);
a temperature detecting means (38) connected to said timing control circuit (36);
a timing control circuit (36);
charging means connected to said timing control circuit (36);
discharging means connected to said timing control circuit (36);
a capacitor connected to both said charging means and said discharging means; and
an output terminal (29) for outputting said first signal, said second signal and said third signal.

20. The ink jet print head according to one of the preceding claims, wherein said print head is included in an ink jet printing device.

Patentansprüche

1. Tintenstrahldruckkopf, umfassend:

Druckerzeugungskammern (3), wobei eine jede der Druckerzeugungskammern (3) eine Helmholtz-Resonanzfrequenz der Periode TH aufweist und mit einer gemeinsamen Tintenkammer (4) über einen Tintenzufuhrpfad (5) kommuniziert;
Düsenlöcher (2), die jeweils den Druckerzeugungskammern (3) entsprechen; und
piezoelektrische Vibratoren (9) zum Ausdehnen beziehungsweise Zusammendrücken der einzelnen Druckerzeugungskammern (3); und
ein Antriebssignalerzeugungsmittel (26), das an den piezoelektrischen Vibratoren (9) angeschlossen ist, um ein erstes Signal zu erzeugen, um die Druckerzeugungskammern (3) auszudehnen, und ein zweites Signal zu erzeugen, um die Druckerzeugungskammern (3), die sich in einem ausgedehnten Zustand befinden, zusammenzudrükken, um Tintentröpfchen aus den jeweiligen Düsenlöchern (2) auszustoßen, dadurch gekennzeichnet, daß das Antriebssignalerzeugungsmittel (26) ein drittes Signal zur Ausdehnung der Druckerzeugungskammern (3) um ein Volumen erzeugt, welches kleiner ist als ein Volumen, das als Reaktion auf das erste Signal erzeugt wurde, und zu einem Zeitpunkt, an dem sich ein Meniskus, der nach dem Ausstoß der einzelnen Tintentröpfchen erzeugt wird, zu einem zugehörigen Düsenloch (2) hinbewegt.

2. Tintenstrahldruckkopf nach Anspruch 1, wobei die Amplitude des dritten Signals das 0,1- bis 0,5-fache der Amplitude des zweiten Signals und vorzugsweise das 0,2- bis 0,4-fache der Amplitude des zweiten Signals ist.

3. Tintenstrahldruckkopf nach Anspruch 1 oder 2, wobei eine Aktivzustandszeitdauer des ersten Signals im wesentlichen gleich der Dauer TH der Helmholtz-Resonanzfrequenz ist.

4. Tintenstrahldruckkopf nach einem der Ansprüche 1 bis 3, wobei eine Aktivzeitdauer des dritten Signals im wesentlichen gleich der Dauer der natürlichen Vibration der piezoelektrischen Vibratoren (9) ist.

5. Tintenstrahldruckkopf, umfassend:

Druckerzeugungskammern (3), wobei eine jede der Druckerzeugungskammern (3) eine Helmholtz-Resonanzfrequenz der Periode TH aufweist und mit einer gemeinsamen Tintenkammer (4) über einen Tintenzufuhrpfad

(5) kommuniziert;
Düsenlöcher (2), die jeweils den Druckerzeugungskammern (3) entsprechen; und
piezoelektrische Vibratoren (9) zum Ausdehnen beziehungsweise Zusammendrücken der Druckerzeugungskammern (3);
ein Antriebssignalerzeugungsmittel (26), das an den piezoelektrischen Vibratoren (9) angeschlossen ist, um ein erstes Signal zu erzeugen, um die Druckerzeugungskammern (3) für eine Zeit, die im wesentlichen gleich der Periode TH der Helmholtz-Resonanzfrequenz ist, auszudehnen, und ein zweites Signal zu erzeugen, um die Druckerzeugungskammern (3), die sich in einem ausgedehnten Zustand befinden, zusammenzudrücken, um Tintentröpfchen aus den jeweiligen Düsenlöchern (2) nach einer vorherbestimmten Zeit nach der Ausgabe des ersten Signals auszustoßen, dadurch gekennzeichnet, daß das Antriebssignalerzeugungsmittel (26) ein drittes Signal zur Ausdehnung der Druckerzeugungskammern (3) um ein Volumen erzeugt, welches kleiner ist als ein Volumen, das als Reaktion auf das erste Signal erzeugt wurde, zu einem Zeitpunkt, an dem sich ein Meniskus, der nach dem Ausstoß der einzelnen Tintentröpfchen erzeugt wird, zu einem zugeordneten Düsenloch (2) hinbewegt; und
ein Mittel zur Einstellung eines Verhältnisses zwischen den Amplituden des ersten Signals und des dritten Signals.

6. Tintenstrahldruckkopf nach Anspruch 5, wobei das Verhältnis durch eine Aktivzustandszeitdauer des dritten Signals eingestellt wird.

7. Tintenstrahldruckkopf nach einem der vorhergehenden Ansprüche, wobei das Antriebssignalerzeugungsmittel (26) umfaßt:

eine Zeitsteuerschaltung (36);
ein Lademittel, das an der Zeitsteuerschaltung (36) angeschlossen ist;
ein Entlademittel, das an der Zeitsteuerschaltung (36) angeschlossen ist;
einen Kondensator, der sowohl am Lademittel als auch am Entlademittel angeschlossen ist; und
einen Ausgangsanschluß (29) zur Ausgabe des ersten Signals, des zweiten Signals und des dritten Signals.

8. Tintenstrahldruckkopf, umfassend:

Druckerzeugungskammern (3), wobei eine jede der Druckerzeugungskammern (3) eine Helmholtz-Resonanzfrequenz der Periode TH aufweist und mit einer gemeinsamen Tintenkammer (4) über einen Tintenzufuhrpfad (5) kommuniziert;
Düsenlöcher (2), die jeweils den Druckerzeugungskammern (3) entsprechen; und
piezoelektrische Vibratoren (9) zum Ausdehnen beziehungsweise Zusammendrücken der Druckerzeugungskammern (3);
ein Antriebssignalerzeugungsmittel (26), das an den piezoelektrischen Vibratoren (9) angeschlossen ist, um ein erstes Signal zu erzeugen, um die Druckerzeugungskammern (3) auszudehnen, und ein zweites Signal zu erzeugen, um die Druckerzeugungskammern (3), die sich jeweils in einem ausgedehnten Zustand befinden, zusammenzudrücken, um Tintentröpfchen aus den jeweiligen Düsenlöchern (2) nach einer vorherbestimmten Zeit nach der Ausgabe des ersten Signals auszustoßen, dadurch gekennzeichnet, daß das Antriebssignalerzeugungsmittel (26) ein drittes Signal zur Ausdehnung der Druckerzeugungskammern (3) um ein Volumen erzeugt, welches kleiner ist als ein Volumen, das als Reaktion auf das erste Signal erzeugt wurde, zu einem Zeitpunkt, an dem sich ein Meniskus, der nach dem Ausstoß der einzelnen Tintentröpfchen erzeugt wird, zu einem zugehörigen Düsenloch (2) hinbewegt; und
ein Mittel zur Einstellung einer Zeitdauer (36) zwischen der Beendigung der Zufuhr des zweiten Signals und dem Beginn der Zufuhr des dritten Signals.

9. Tintenstrahldruckkopf nach Anspruch 8, wobei die Amplitude des dritten Signals das 0,2- bis 0,4-fache der Amplitude des zweiten Signals ist.

10. Tintenstrahldruckkopf nach einem der vorherigen Ansprüche, wobei eine Aktivzustandszeitdauer des dritten Signals kürzer ist als die Dauer TH der Helmholtz-Resonanzfrequenz.

11. Tintenstrahldruckkopf nach einem der vorherigen Ansprüche, wobei eine Aktivzustandszeitdauer des dritten Signals im wesentlichen gleich einer Aktivzustandszeitdauer des zweiten Signals ist.

12. Tintenstrahldruckkopf nach einem der vorherigen Ansprüche, wobei ein Zeitunterschied von einer Ausgabe des zweiten Signals zu einer Ausgabe des dritten Signals im wesentlichen gleich der Dauer TH der Helmholtz-Resonanzfrequenz ist.

13. Tintenstrahldruckkopf nach einem der vorherigen Ansprüche, wobei eine Aktivzustandszeitdauer des zweiten Signals -im wesentlichen gleich der Dauer der natürlichen Vibration der piezoelektrischen Vibratoren (9) ist.

14. Tintenstrahldruckkopf nach einem der vorherigen Ansprüche, wobei eine Aktivzustandszeitdauer des dritten Signals im wesentlichen gleich der Dauer der natürlichen Vibration der piezoelektrischen Vibratoren (9) ist.

15. Tintenstrahldruckkopf nach einem der vorherigen Ansprüche, wobei die Ausgangszeitsteuerung des dritten Signals in Übereinstimmung mit der Umgebungstemperatur gesteuert wird.

16. Tintenstrahldruckkopf nach einem der vorherigen Ansprüche, wobei die Ausgangszeitsteuerung des dritten Signals in Übereinstimmung mit der Umgebungstemperatur gesteuert wird, so daß die Ausgangszeitsteuerung mit einer Zeitsteuerung übereinstimmt, wenn sich die Vibration des Meniskus in jedem einzelnen Düsenloch (2) zu einer Position hinbewegt, die einer zugeordneten Druckerzeugungskammer (3) am nächsten ist.

17. Tintenstrahldruckkopf nach einem der vorherigen Ansprüche, weiter umfassend:

ein Steuersignalerzeugungsmittel (20) zur Erzeugung eines Verriegelungssignals, eines Drucksignals und eines Schiebetaktsignals; und/oder
eine Vielzahl an ersten Flipflops (F2), die jeweils den piezoelektrischen Vibratoren (9) entsprechen, die das Schiebetaktsignal und das Drucksignal empfangen, wobei jedes einzelne der Vielzahl an ersten Flipflops (F2) ein Drucksignal ausgibt; und/oder
eine Vielzahl an zweiten Flipflops (F1), die jeweils an die piezoelektrischen Vibratoren (9) gekoppelt sind, wobei ein jedes der zweiten Flipflops (F1) das Drucksignal von einem zugeordneten der ersten Flipflops (F2) empfängt und weiter das Verriegelungssignal empfängt; wobei jedes der zweiten Flipflops (F1) ein Steuersignal ausgibt; und/oder
eine Vielzahl an Schalttransistoren (30), die jeweils das von einem zugeordneten der zweiten Flipflops (F1) ausgegebene Steuersignal empfangen, um die Betätigung der entsprechenden piezoelektrischen Vibratoren (9) zu steuern; und/oder
wobei die ersten Flipflops (F2) ein Schieberegister und die zweiten Flipflops (F1) eine Verriegelungsschaltung bilden, so daß die Drucksignale von den ersten Flipflops (F2) jeweils von den zweiten Flipflops (F1) verriegelt werden.

18. Tintenstrahldruckkopf nach einem der vorherigen Ansprüche, weiter umfassend:

eine Vielzahl an ODER-Schaltelementen (28), die mit dem Antriebssignalerzeugungsmittel (26) und den entsprechenden der zweiten Flipflops (F1) verbunden sind, wobei Schalttransistoren (30) wahlweise durch Ausgangssignale von den ODER-Schaltelementen (28) aktiviert werden.

19. Tintenstrahldruckkopf nach einem der Ansprüche 8 bis 18, wobei das Antriebssignalerzeugungsmittel umfaßt:

eine Zeitsteuerschaltung (36); ein Temperaturerfassungsmittel (38), das an der Zeitsteuerschaltung (36) angeschlossen ist;
ein Lademittel, das an der Zeitsteuerschaltung (36) angeschlossen ist;
ein Entlademittel, das an der Zeitsteuerschaltung (36) angeschlossen ist;
einen Kondensator, der sowohl am Lademittel als auch am Entlademittel angeschlossen ist; und
einen Ausgangsanschluß (29) zur Ausgabe des ersten Signals, des zweiten Signals und des dritten Signals.

20. Tintenstrahldruckkopf nach einem der vorherigen Ansprüche, wobei der Druckkopf in einem Tintenstrahldruckgerät enthalten ist.

Revendications

1. Tête d'impression à jets d'encre, comprenant :

des chambres génératrices de pression (3), chacune de ces chambres (3) ayant une fréquence de résonance de Helmholtz de période TH et communiquant avec une chambre commune d'encre (4) par un trajet (5) d'alimentation en encre,
des trous (2) de buse correspondant respectivement aux chambres génératrices de pression (3),
des vibrateurs piézoélectriques (9) destinés à provoquer la dilatation et la compression des chambres génératrices de pression (3) respectivement, et
un dispositif (26) générateur de signaux de pilotage, connecté aux vibrateurs piézoélectriques (9) et destiné à créer un premier signal de dilatation des chambres génératrices de pression (3), et un second signal de compression des chambres génératrices de pression (3) qui sont à un état dilaté afin que des gouttelettes d'encre soient projetées par les trous respectifs de buse (2), caractérisée en ce que le dispositif (26) générateur de signaux de pilotage crée un troisième signal de dilatation des chambres génératrices de pression (3) d'un volume plus petit que le volume produit par le premier signal et à un moment où un ménisque créé après la projection de chaque gouttelette d'encre se déplace vers un trou associé de buse (2).

2. Tête d'impression à jets d'encre selon la revendication 1, dans laquelle l'amplitude du troisième signal est comprise entre 0,1 et 0,5 fois l'amplitude du seconde signal et de préférence entre 0,2 et 0,4 fois l'amplitude du seconde signal.

3. Tête d'impression à jets d'encre selon la revendication 1 ou 2, dans laquelle la durée à l'état actif du premier signal est pratiquement égale à la période TH de la fréquence de résonance de Helmholtz.

4. Tête d'impression à jets d'encre selon la revendication 1 à 3, dans laquelle la durée à l'état actif du troisième signal est pratiquement égale à la période de vibration naturelle des vibrateurs piézoélectriques (9).

5. Tête d'impression à jets d'encre comprenant :

des chambres génératrices de pression (3), chacune de ces chambres (3) ayant une fréquence de résonance de Helmholtz de période TH et communiquant avec une chambre commune d'encre (4) par un trajet (5) d'alimentation en encre,
des trous (2) de buse correspondant respectivement aux chambres génératrices de pression (3),
des vibrateurs piézoélectriques (9) destinés à provoquer la dilatation et la compression des chambres génératrices de pression (3), respectivement, et
un dispositif (26) générateur de signaux de pilotage, connecté aux vibrateurs piézoélectriques (9) et destiné à créer un premier signal de dilatation des chambres génératrices de pression (3) pendant un temps pratiquement égal à la période TH de la fréquence de résonance de Helmholtz, et un second signal de compression des chambres génératrices de pression (3) qui sont chacune à un état dilaté afin que des gouttelettes d'encre soient projetées par les trous respectifs de buse (2) après un temps prédéterminé depuis la transmission du premier signal, caractérisée en ce que le dispositif (26) générateur de signaux de pilotage crée un troisième signal de dilatation des chambres génératrices de pression (3) d'un volume inférieur au volume produit par le premier signal, à un moment où un ménisque créé après la projection de chaque gouttelette d'encre se déplace vers un trou associé de buse (2), et
un dispositif d'ajustement du rapport des amplitudes du premier signal et du troisième signal.

6. Tête d'impression à jets d'encre selon la revendication 5, dans laquelle le rapport est ajusté par la durée à l'état actif du troisième signal.

7. Tête d'impression à jets d'encre selon l'une quelconque des revendications précédentes, dans laquelle le dispositif (26) générateur de signaux de pilotage comprend :

un circuit (36) de commande de minutage,
un dispositif de charge connecté au circuit de commande de minutage (36),
un dispositif de décharge connecté au circuit de commande de minutage (36),
un condensateur connecté à la fois au dispositif de charge et au dispositif de décharge, et
une borne de sortie (29) destinée à transmettre le premier signal, le second signal et le troisième signal.

8. Tête d'impression à jets d'encre comprenant :

des chambres génératrices de pression (3), chacune de ces chambres (3) ayant une fréquence de résonance

de Helmholtz de période TH et communiquant avec une chambre commune d'encre (4) par un trajet (5) d'alimentation en encre,
des trous (2) de buse correspondant respectivement aux chambres génératrices de pression (3),
des vibrateurs piézoélectriques (9) destinés à dilater et comprimer les chambres génératrices de pression (3), respectivement, et
un dispositif (26) générateur de signaux de pilotage, connecté aux vibrateurs piézoélectriques (9) et destiné à créer un premier signal de dilatation des chambres génératrices de pression (3), et un second signal de compression des chambres génératrices de pression (3), chacune étant à un état dilaté, afin que des gouttelettes d'encre soient projetées par les trous respectifs de buse (2) après un temps prédéterminé suivant la transmission du premier signal, caractérisée en ce que le dispositif (26) générateur de signaux de pilotage crée un troisième signal de dilatation des chambres génératrices de pression (3) d'un volume inférieur au volume produit par le premier signal, à un moment où un ménisque créé après la projection de chacune des gouttelettes d'encre se déplace vers un trou associé de buse (2), et
un dispositif d'ajustement d'une période (36) comprise entre la fin de la transmission du second signal et le début de la transmission du troisième signal.

9. Tête d'impression à jets d'encre selon la revendication 8, dans laquelle l'amplitude du troisième signal est comprise entre 0,2 et 0,4 fois l'amplitude du second signal.

10. Tête d'impression à jets d'encre selon l'une quelconque des revendications précédentes, dans laquelle la durée à l'état actif du troisième signal est plus courte que la période TH de la fréquence de résonance de Helmholtz.

11. Tête d'impression à jets d'encre selon l'une quelconque des revendications précédentes, dans laquelle la durée à l'état actif du troisième signal est pratiquement égale à la durée à l'état actif du second signal.

12. Tête d'impression à jets d'encre selon l'une quelconque des revendications précédentes, dans laquelle la différence de temps entre la transmission du second signal et la transmission du troisième signal est pratiquement égale à la période TH à la fréquence de résonance de Helmholtz.

13. Tête d'impression à jets d'encre selon l'une quelconque des revendications précédentes, dans laquelle la durée à l'état actif du second signal est pratiquement égale à la période de vibration naturelle des vibrateurs piézoélectriques (9).

14. Tête d'impression à jets d'encre selon l'une des revendications précédentes, dans laquelle la durée à l'état actif du troisième signal est pratiquement égale à la période de vibration naturelle des vibrateurs piézoélectriques (9).

15. Tête d'impression à jets d'encre selon l'une des revendications précédentes, dans laquelle le minutage de la transmission du troisième signal est réglé en fonction de la température ambiante.

16. Tête d'impression à jets d'encre selon l'une des revendications précédentes, dans laquelle le minutage de la transmission du troisième signal est réglé en fonction de la température ambiante afin que le minutage de la transmission coïncide au moment où une vibration du ménisque de chaque trou de buse (2) se déplace vers une position la plus proche d' une chambre associée parmi les chambres génératrices de pression (3).

17. Tête d'impression à jets d'encre selon l'une quelconque des revendications précédentes, comprenant en outre :

un dispositif (20) générateur de signaux de commande destiné à créer un signal de verrouillage, un signal d'impression et un signal d'horloge de décalage, et/ou
plusieurs premières bascules (F2) correspondant respectivement aux vibrateurs piézoélectriques (9), qui reçoivent le signal d'horloge de décalageet le signal d'impression, chacune des premières bascules (F2) transmettant un signal d'impression, et/ou
plusieurs secondes bascules (F1) couplées respectivement aux vibrateurs piézoélectriques (9), chacune des secondes bascules (F1) recevant le signal d'impression d'une bascule associée parmi les premières bascules (F2) et recevant en outre le signal de verrouillage, chacune des secondes bascules (F1) transmettant un signal de commande, et/ou
plusieurs transistors de commutation (30) recevant chacun le signal de commande transmis par une bascule associée parmi les secondes bascules (F1) pour la commande de l'activation de vibrateurs piézoélectriques respectifs (9), et/ou

dans laquelle les premières bascules (F2) forment un registre à' décalage et les secondes bascules (F1) forment un circuit de verrouillage afin que les signaux d'impression provenant des premières bascules (F2) soient conservés par les secondes bascules (F1) respectivement.

18. Tête d'impression à jets d'encre selon l'une quelconque des revendications précédentes, comprenant en outre plusieurs portes OU (28) connectées au dispositif (26) générateur de signaux de pilotage et à des bascules respectives parmi les secondes bascules (F1), et les transistors de commutation (30) sont activés sélectivement par les signaux de sortie des portes OU (28).

19. Tête d'impression à jets d'encre selon l'une des revendications 8 à 18, dans laquelle le dispositif générateur des signaux de pilotage comporte :

un circuit (36) de commande de minutage,
un dispositif (38) de détection de température connecté au circuit (36) de commande de minutage,
un dispositif de charge connecté au circuit (36) de commande de minutage,
un dispositif de décharge connecté au circuit (36) de commande de minutage,
un condensateur connecté à la fois au dispositif de charge et au dispositif de décharge, et
une borne de sortie (29) destinée à transmettre le premier signal, le second signal et le troisième signal.

20. Tête d'impression à jets d'encre selon l'une quelconque des revendications précédentes, dans laquelle la tête d'impression est incorporée à un dispositif d'impression à jets d'encre.

FIG. 1

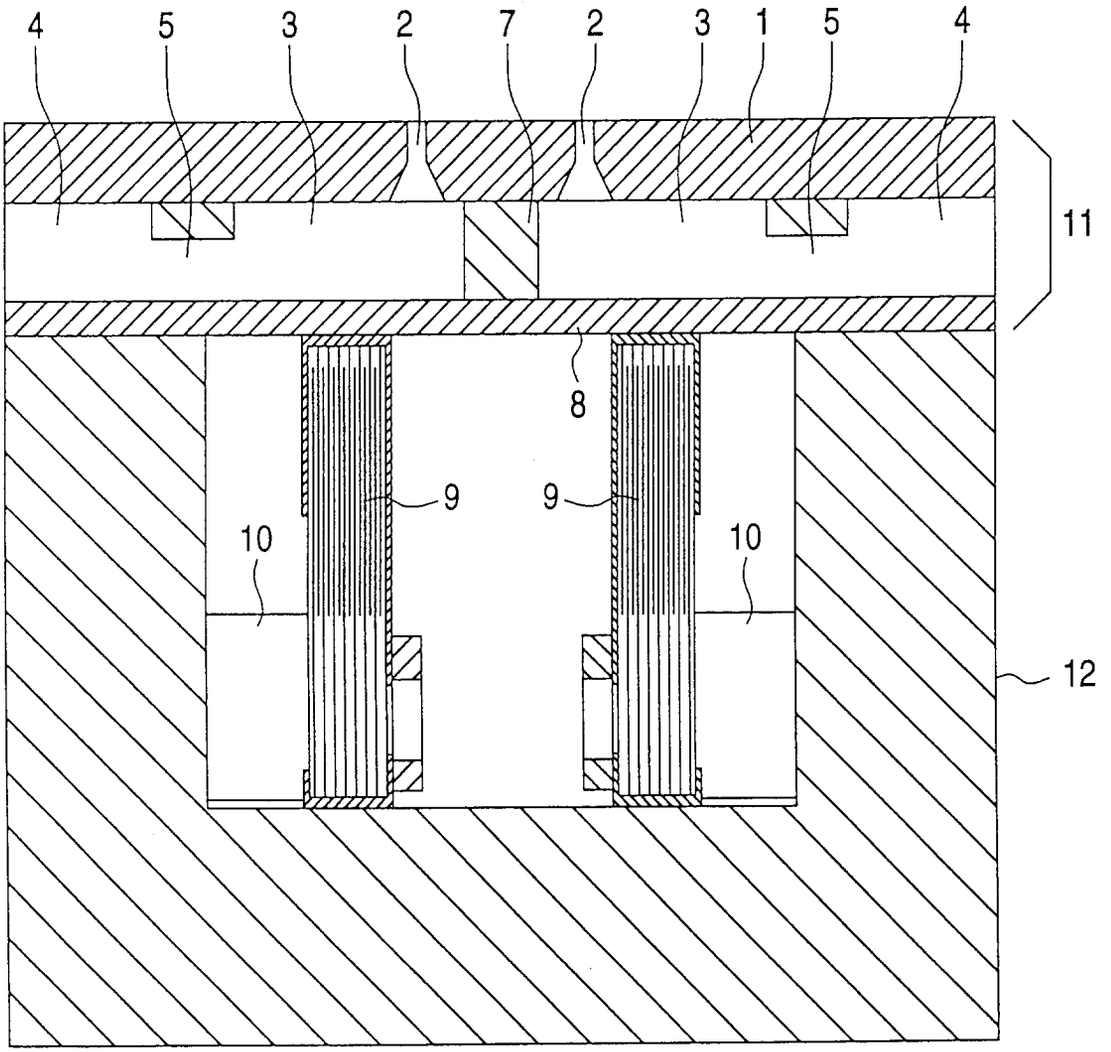

FIG. 2

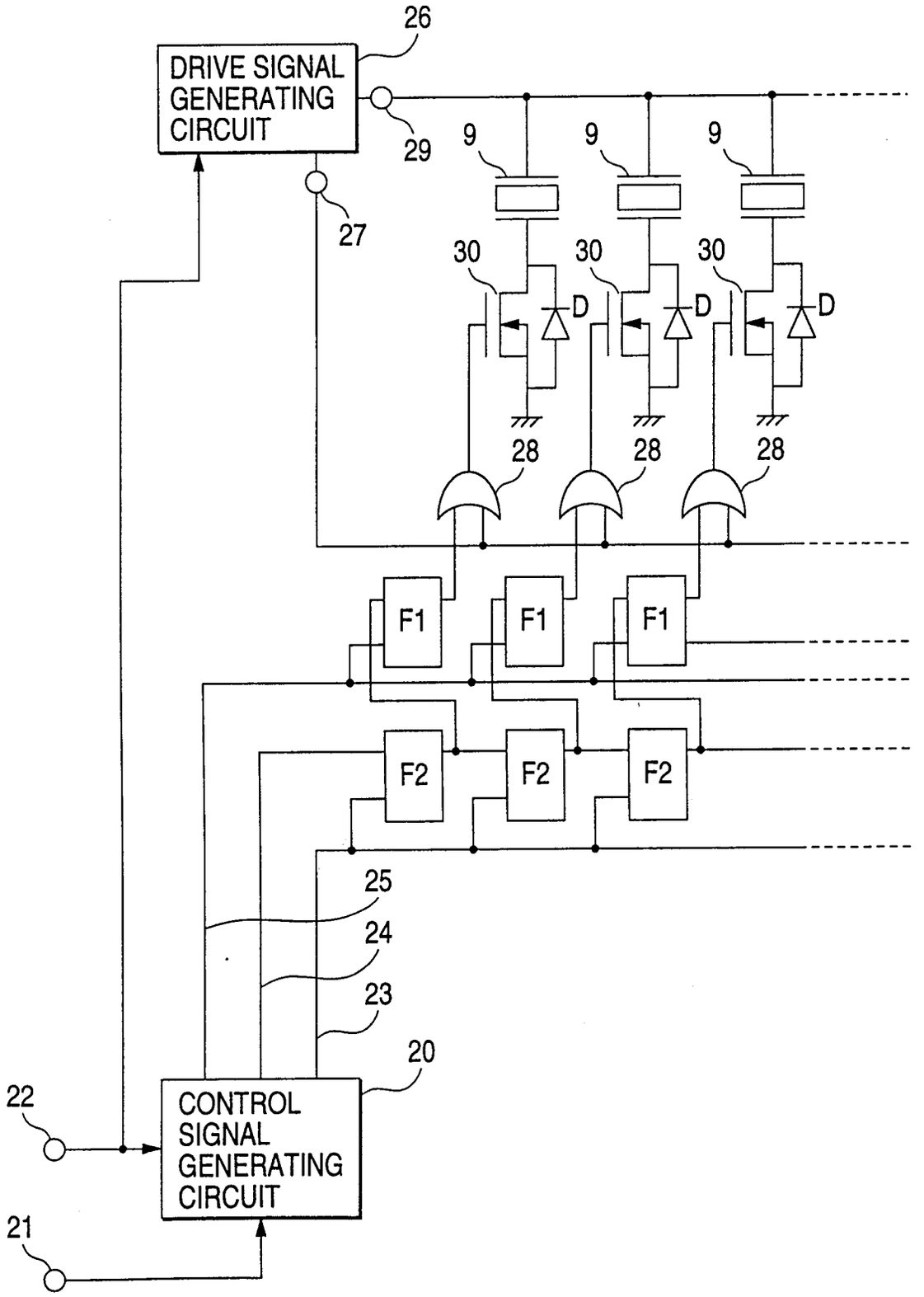
26
DRIVE SIGNAL GENERATING CIRCUIT
29
27
9
9
9
30
30
30
D
D
D
28
28
28
F1
F1
F1
F2
F2
F2
25
24
23
20
22
CONTROL SIGNAL GENERATING CIRCUIT
21

FIG. 3

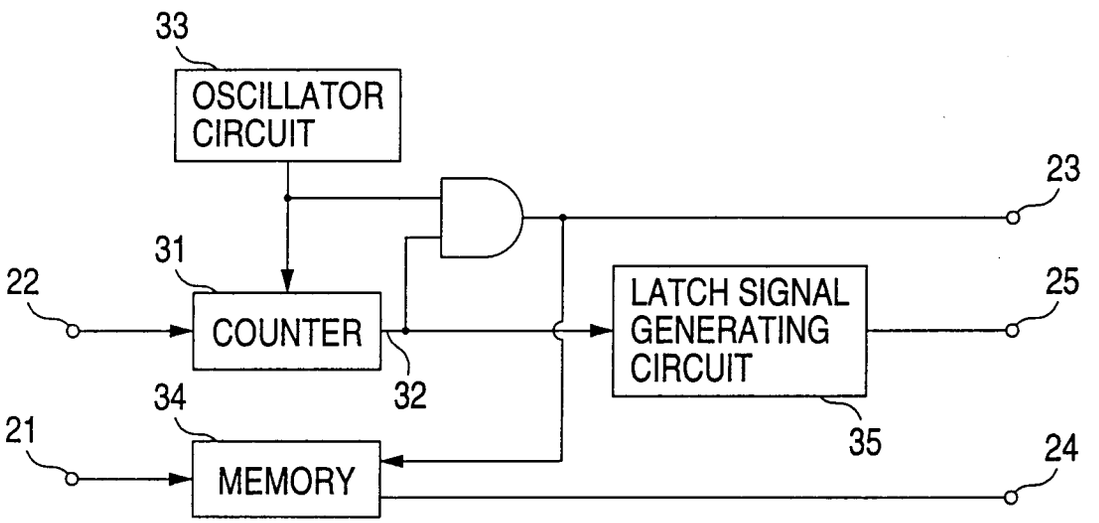
33
OSCILLATOR CIRCUIT
23
31
22
COUNTER
32
LATCH SIGNAL GENERATING CIRCUIT
25
34
21
MEMORY
35
24

FIG. 4

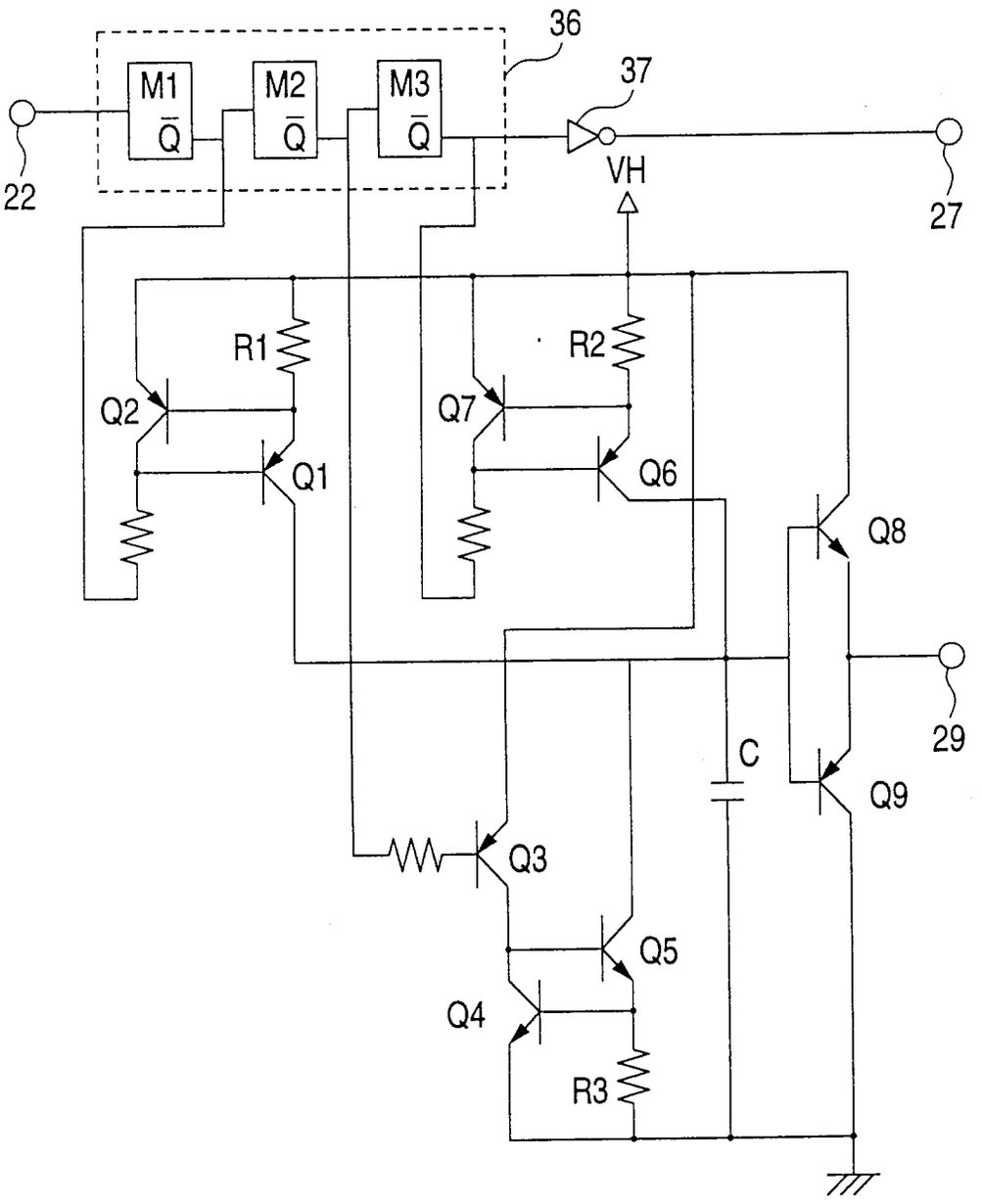

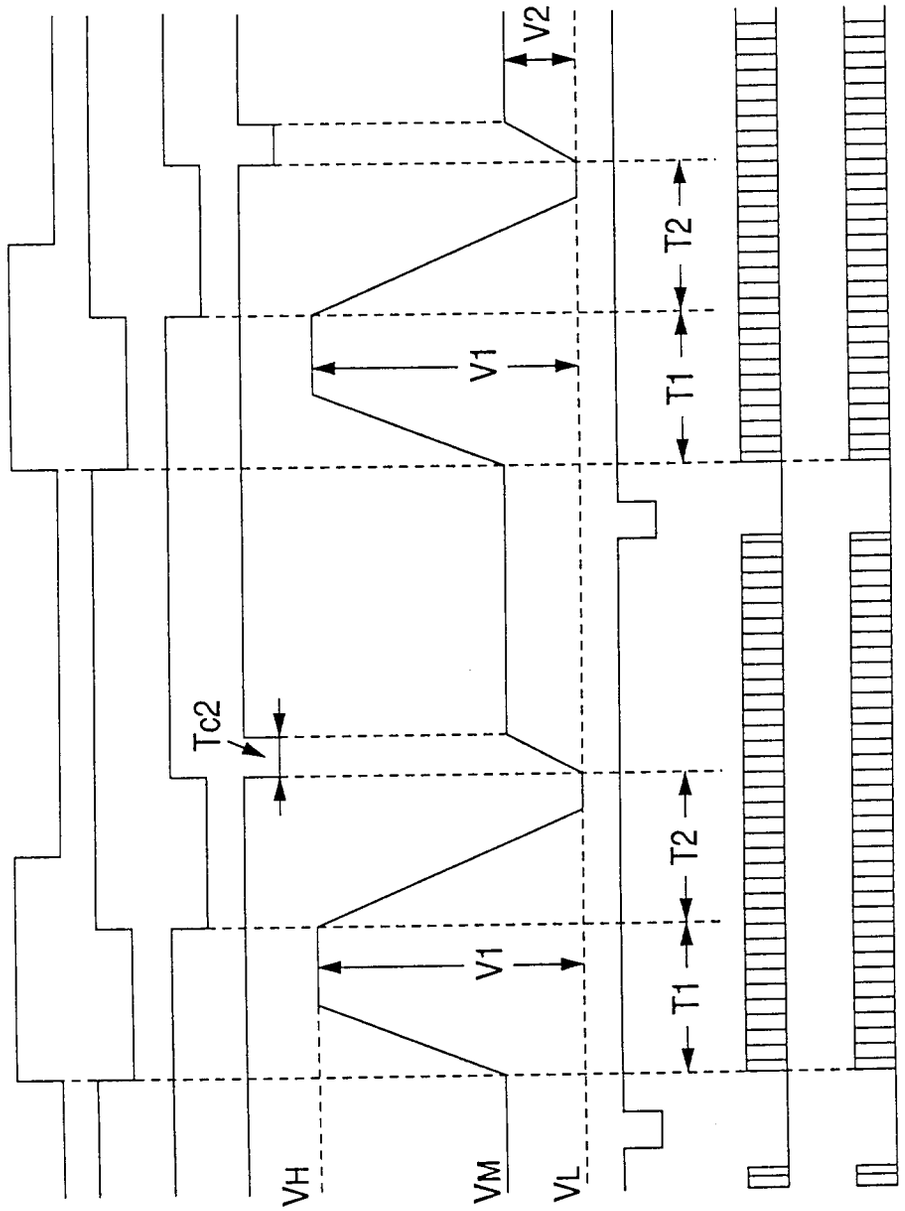

FIG. 5 (a) I
FIG. 5 (b) II
FIG. 5 (c) III
FIG. 5 (d) IV
FIG. 5 (e) V
FIG. 5 (f) VI
FIG. 5 (g) VII
FIG. 5 (h) VIII

FIG. 6

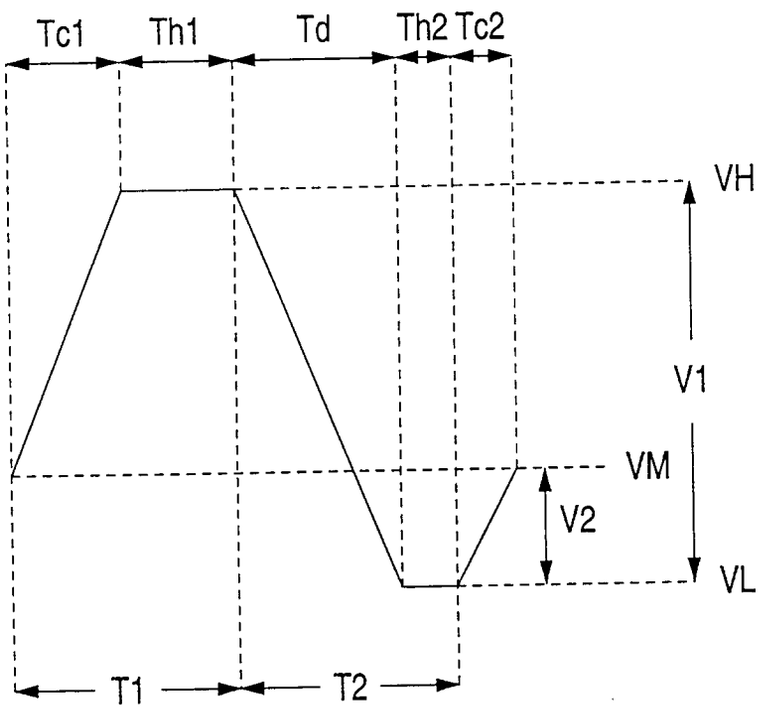

FIG. 7 (a)

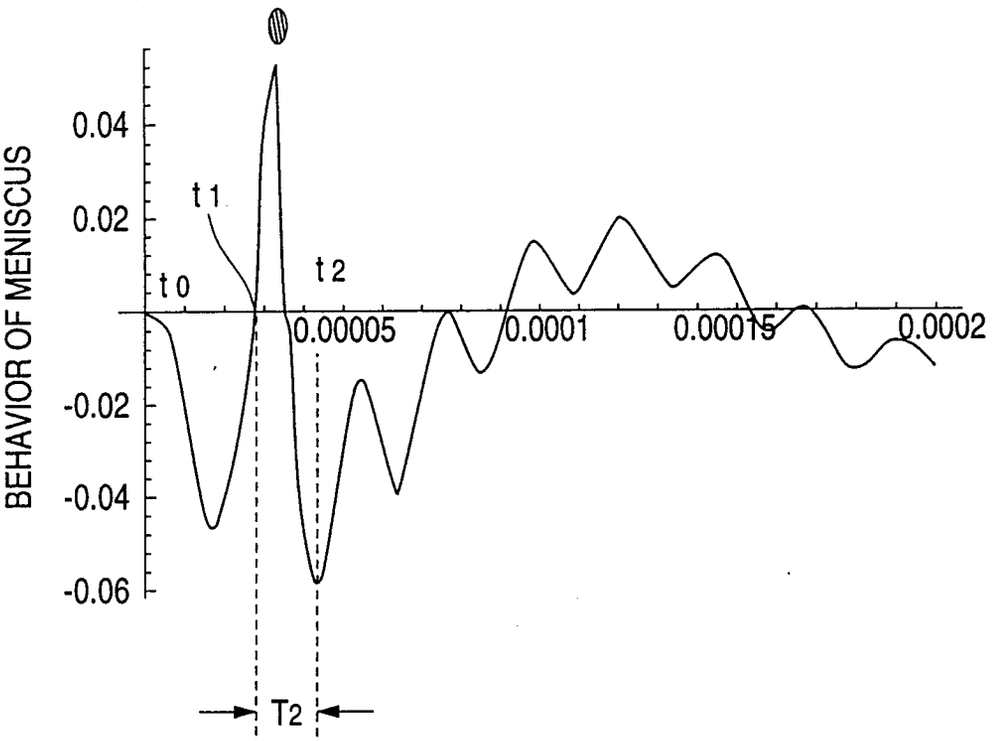
BEHAVIOR OF MENISCUS
0.04
0.02
-0.02
-0.04
-0.06
t 0
t 1
t 2
0.00005
0.0001
0.00015
0.0002
T2

FIG. 7 (b)

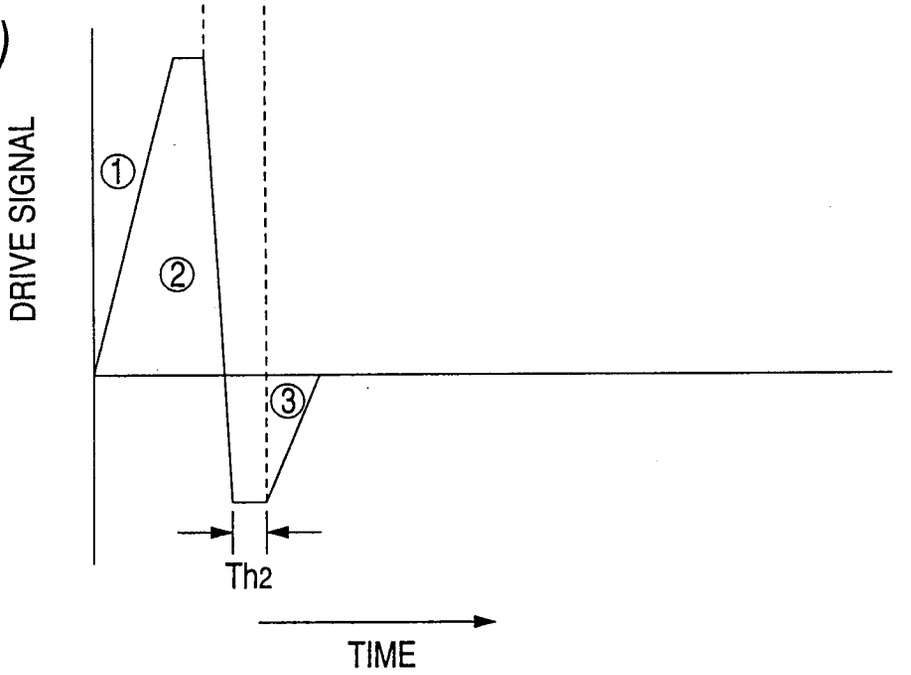
DRIVE SIGNAL
①
②
③
Th2
TIME

FIG. 8 (a)

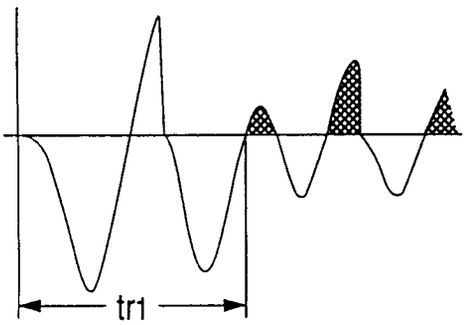

FIG. 8 (b)

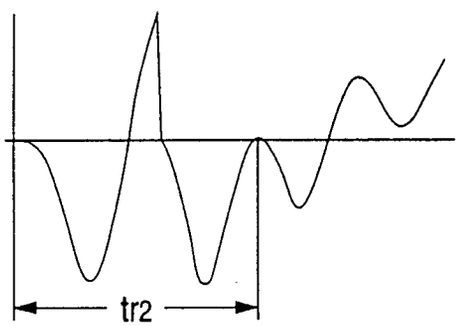

FIG. 8 (c)

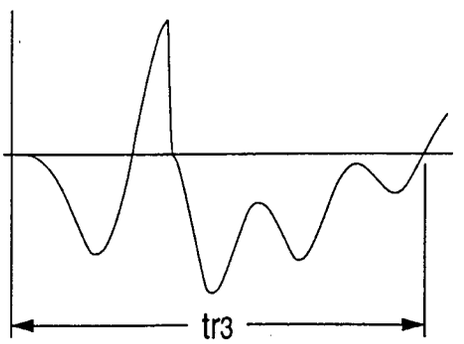

FIG. 8 (d)

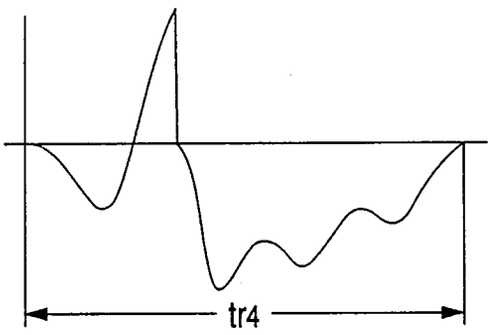

FIG. 8 (e)

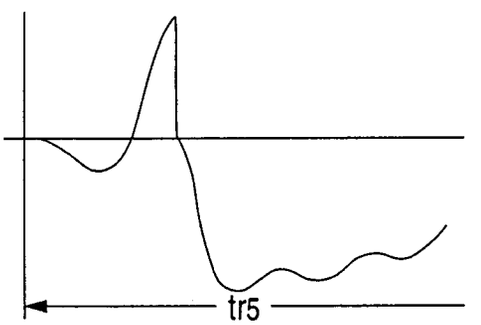

FIG. 8 (f)

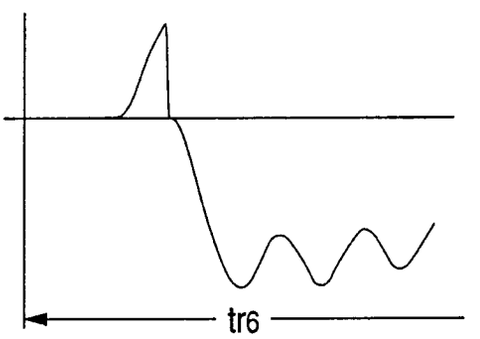

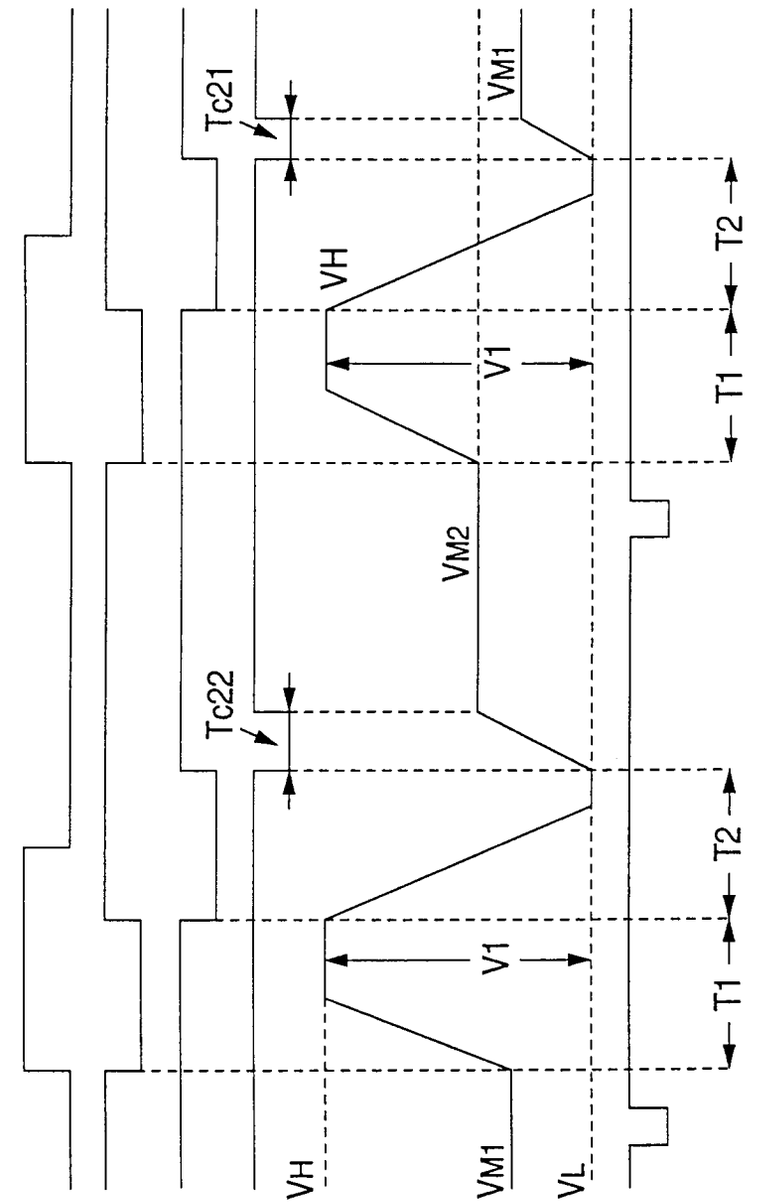

FIG. 9 (a)I
FIG. 9 (b)II
FIG. 9 (c)III
FIG. 9 (d)IV
FIG. 9 (e)V
FIG. 9 (f)VI

FIG. 10 (a)

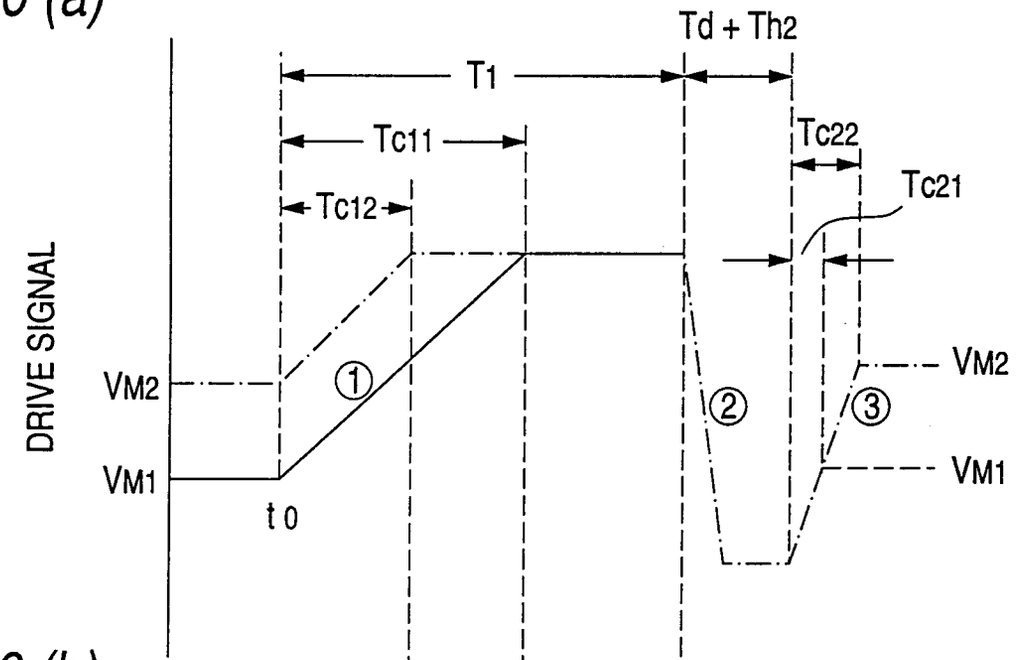

FIG. 10 (b)

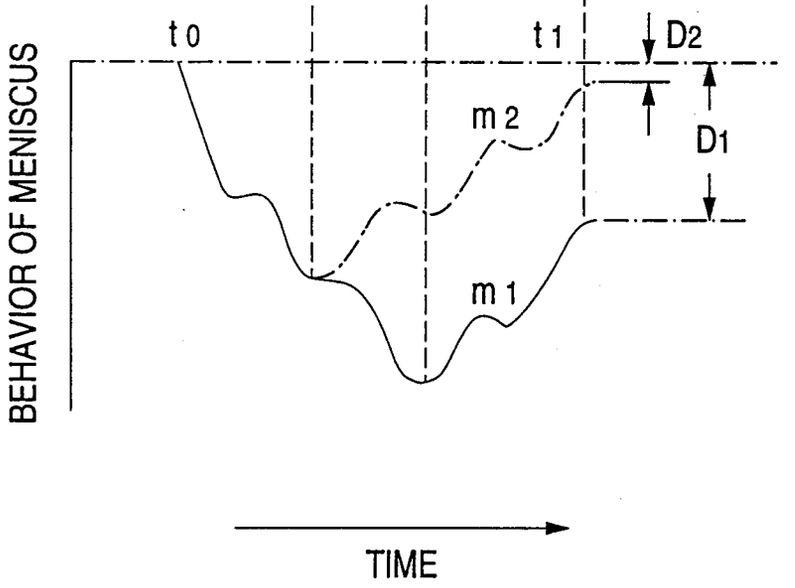

FIG. 11

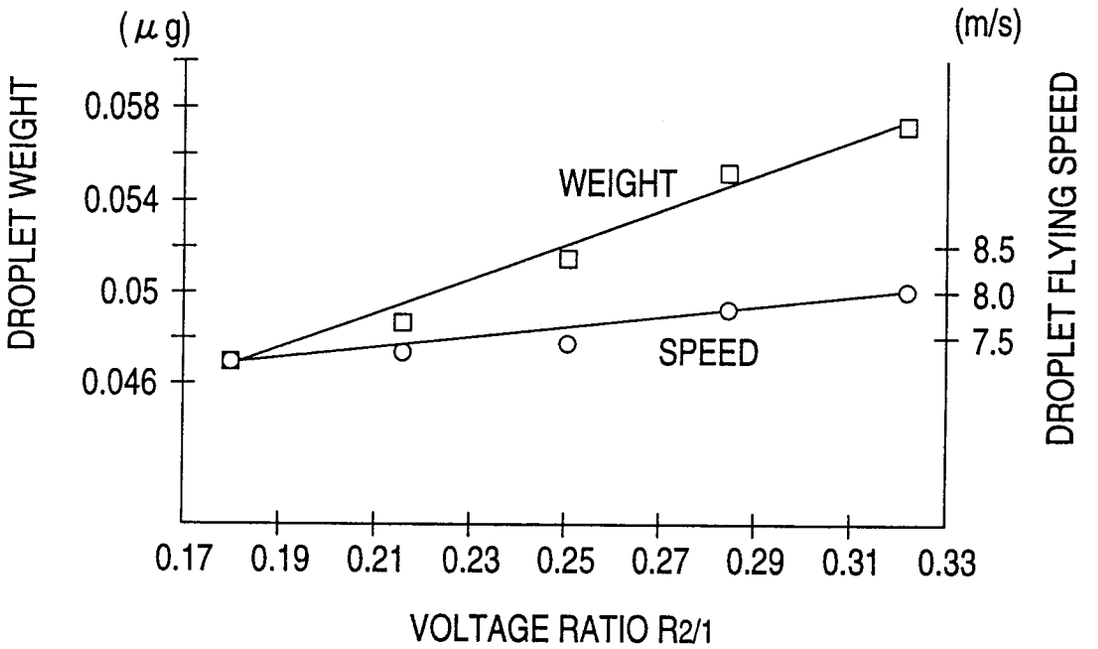
(μg)
(m/s)
DROPLET WEIGHT
DROPLET FLYING SPEED
0.058
0.054
0.05
0.046
8.5
8.0
7.5
WEIGHT
SPEED
0.17
0.19
0.21
0.23
0.25
0.27
0.29
0.31
0.33
VOLTAGE RATIO R2/1

FIG. 12 (a)

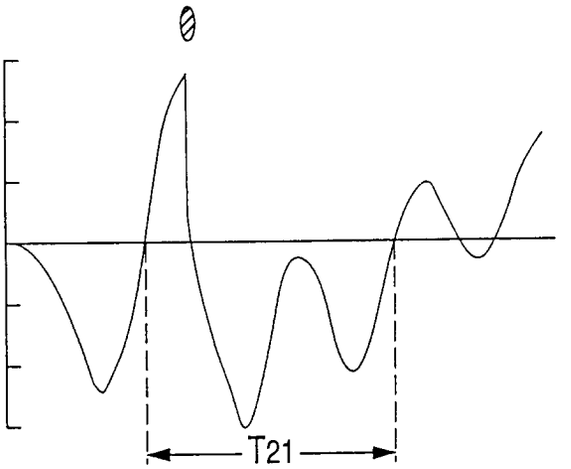

FIG. 12 (b)

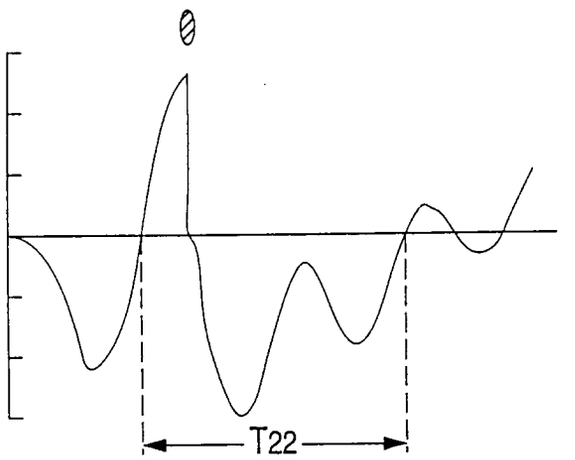

FIG. 12 (c)

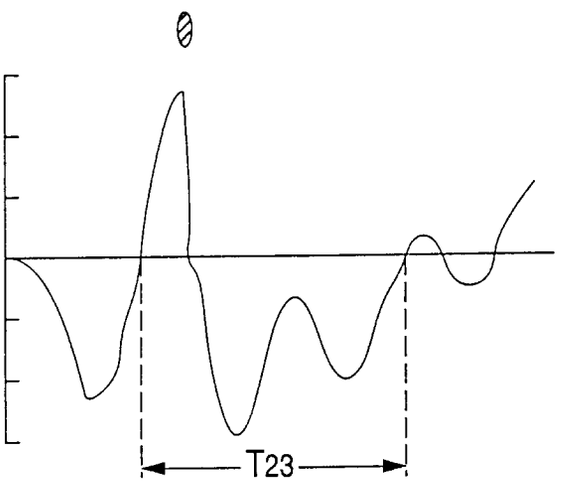

FIG. 13

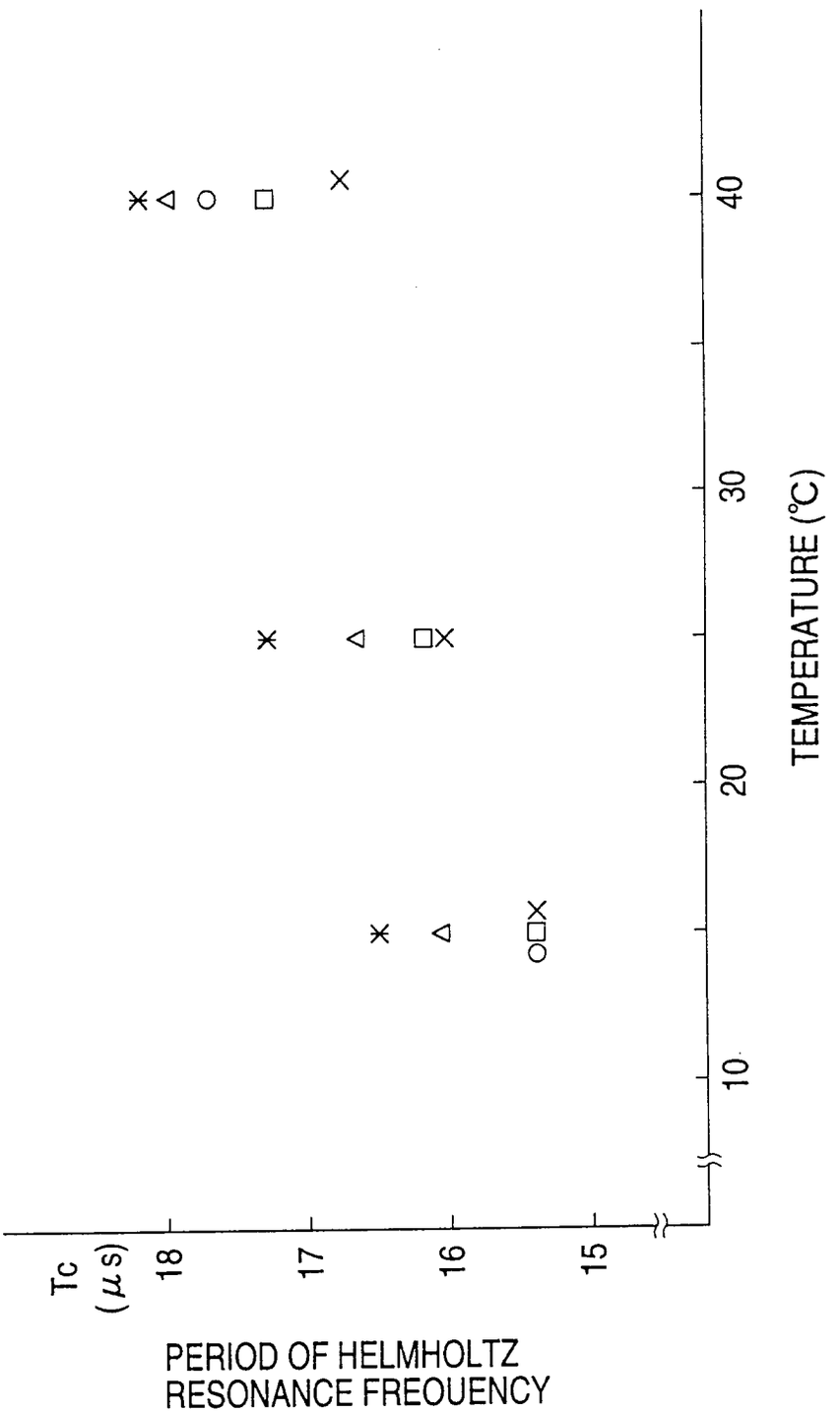
Tc
(μs)
18
17
16
15
10
20
30
40
TEMPERATURE (°C)
PERIOD OF HELMHOLTZ
RESONANCE FREQUENCY

FIG. 14

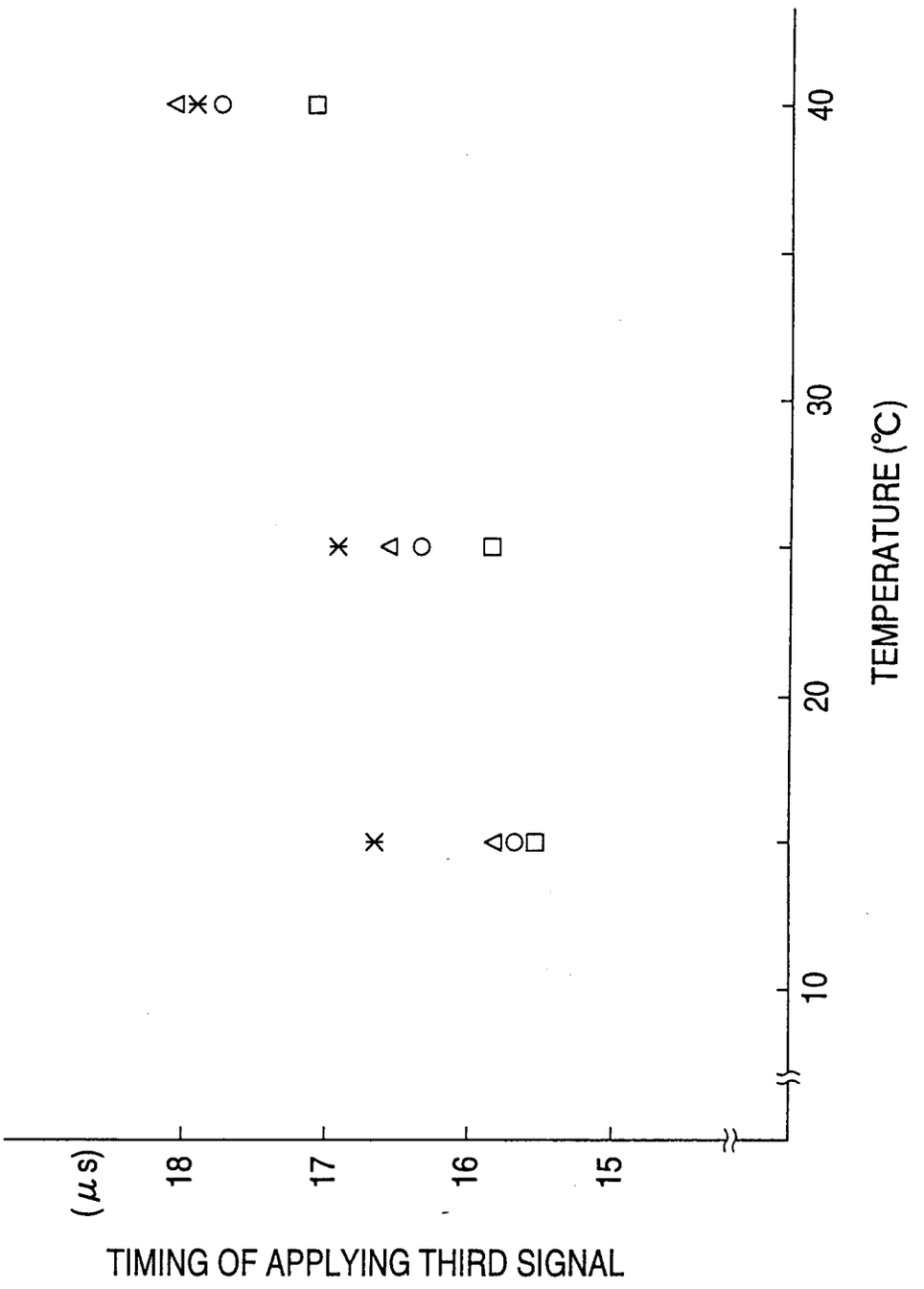
TIMING OF APPLYING THIRD SIGNAL
(μs)
18
17
16
15
10
20
30
40
TEMPERATURE (°C)

FIG. 15

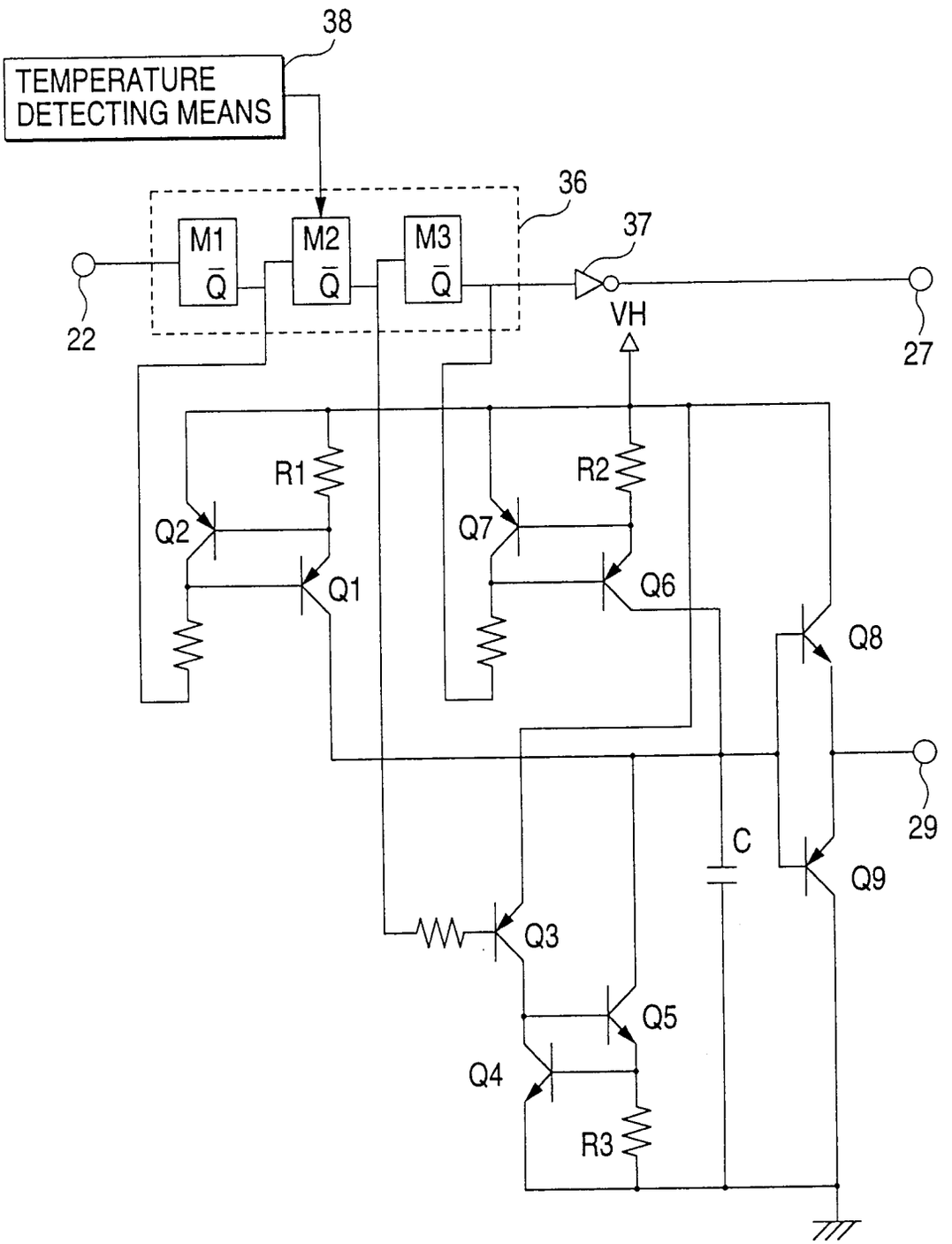
38
TEMPERATURE DETECTING MEANS
36
37
M1
M2
M3
Q̄
22
VH
27
R1
R2
Q2
Q7
Q1
Q6
Q8
29
C
Q9
Q3
Q5
Q4
R3

FIG. 16

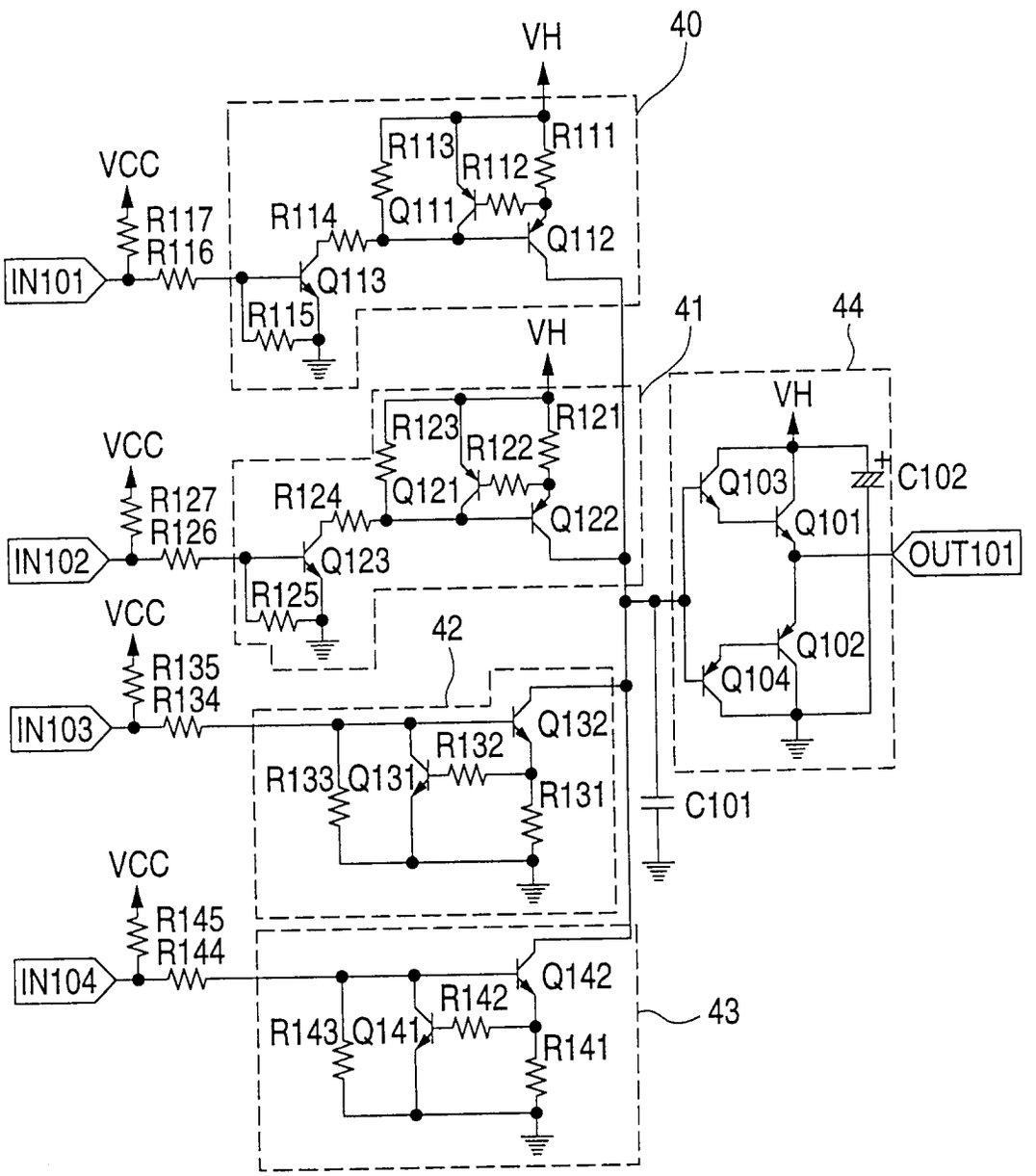
VH
40
R113
R111
R112
VCC
R117
R114
Q111
Q112
R116
IN101
Q113
R115
41
44
VH
VH
R123
R121
R122
VCC
Q103
C102
R127
R124
Q121
Q122
Q101
R126
IN102
Q123
OUT101
R125
VCC
42
Q102
R135
Q104
R134
IN103
Q132
R132
R133
Q131
R131
C101
VCC
R145
R144
IN104
Q142
R142
43
R143
Q141
R141

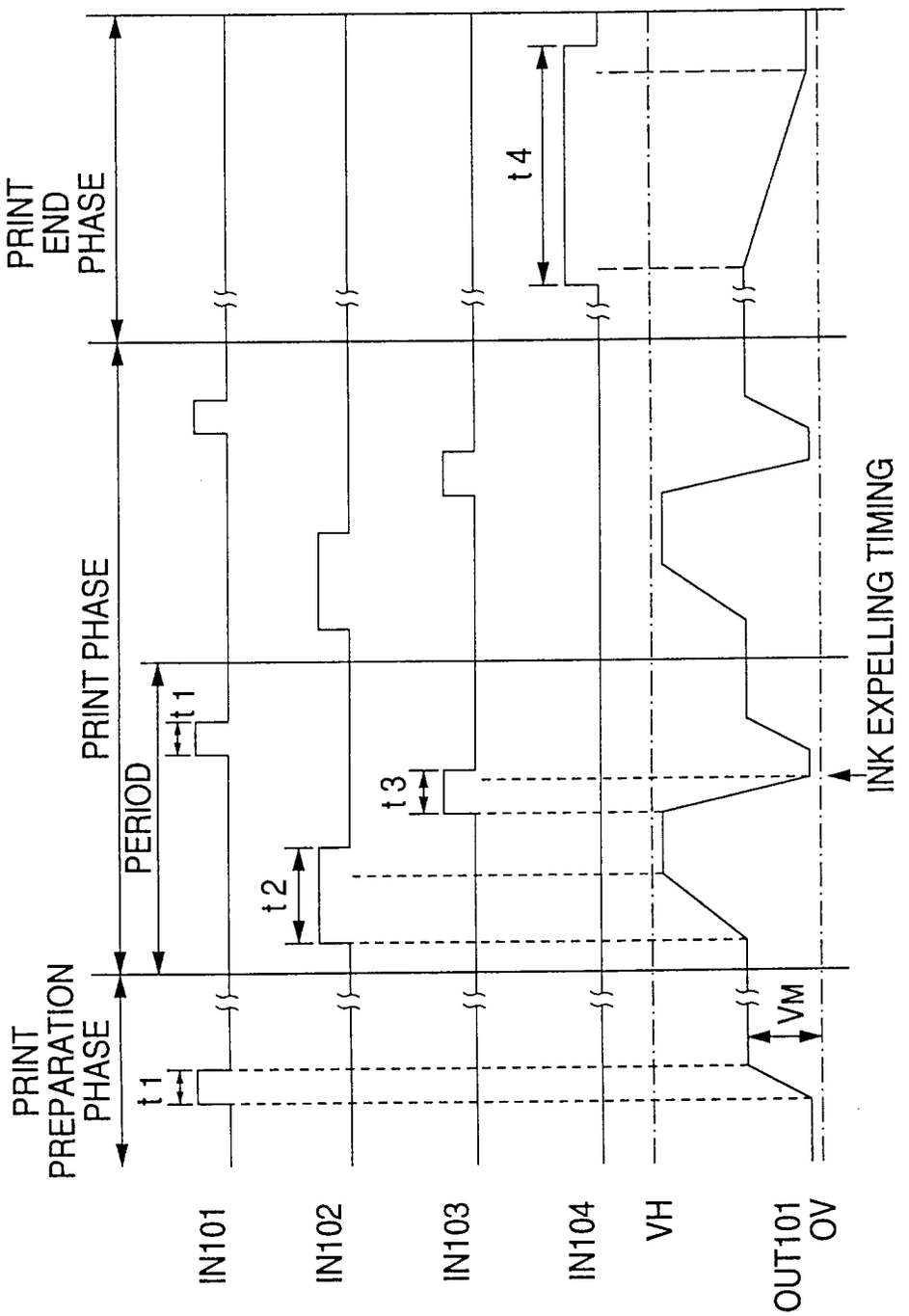

FIG. 17 (a)

FIG. 17 (b)

FIG. 17 (c)

FIG. 17 (d)

FIG. 17 (e)

FIG. 17 (f)

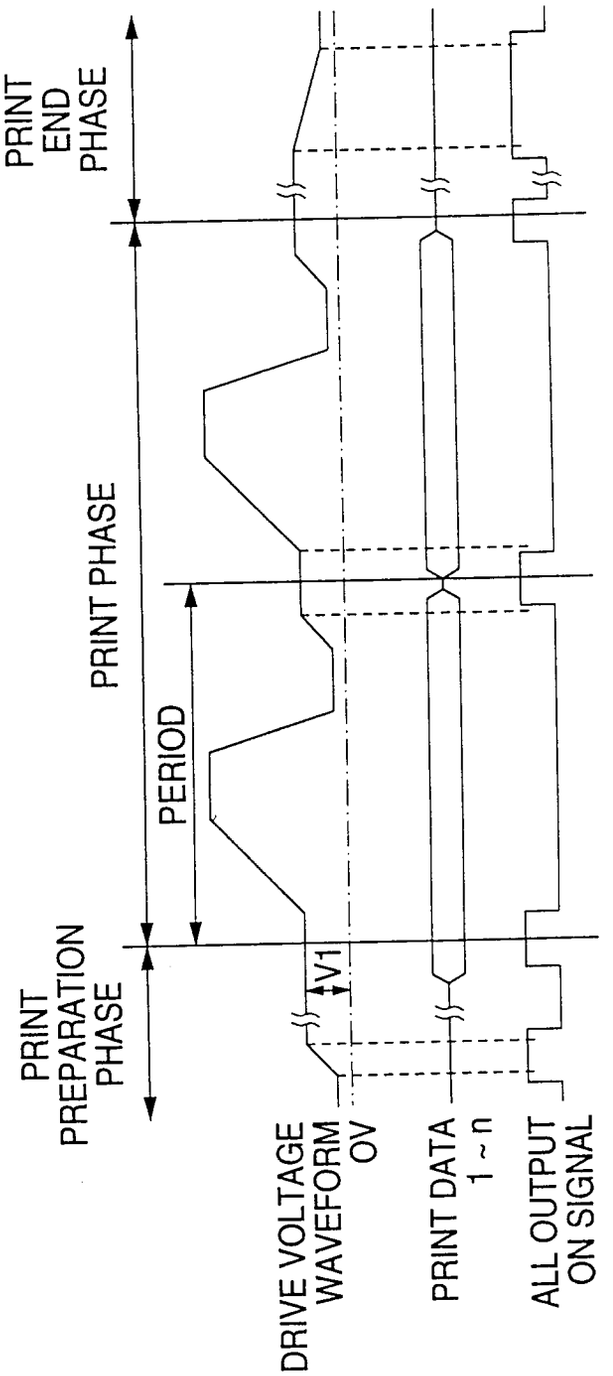

FIG. 18 (a)

FIG. 18 (b)

FIG. 18 (c)

FIG. 19

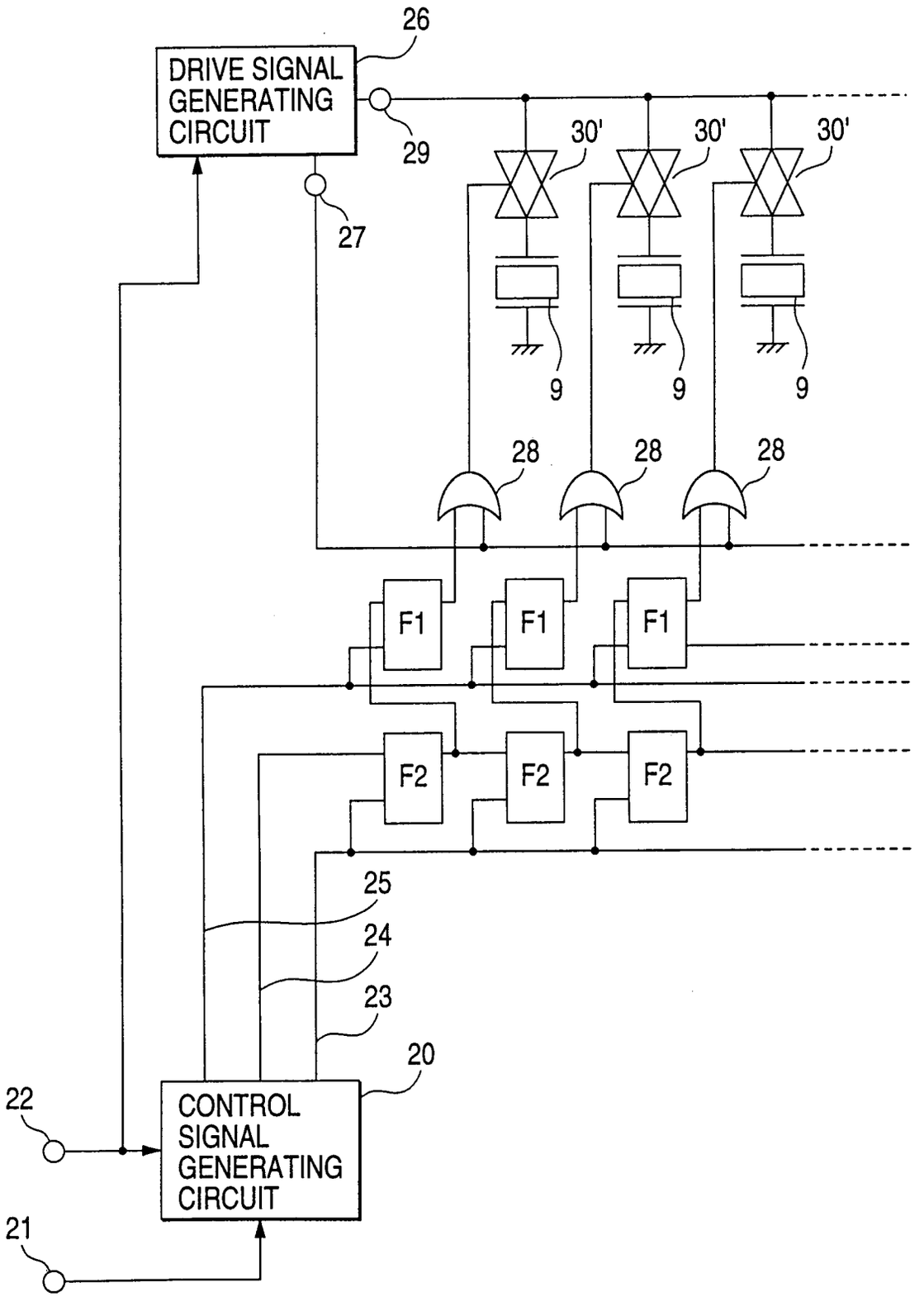
26
DRIVE SIGNAL GENERATING CIRCUIT
29
27
30'
30'
30'
9
9
9
28
28
28
F1
F1
F1
F2
F2
F2
25
24
23
20
22
CONTROL SIGNAL GENERATING CIRCUIT
21

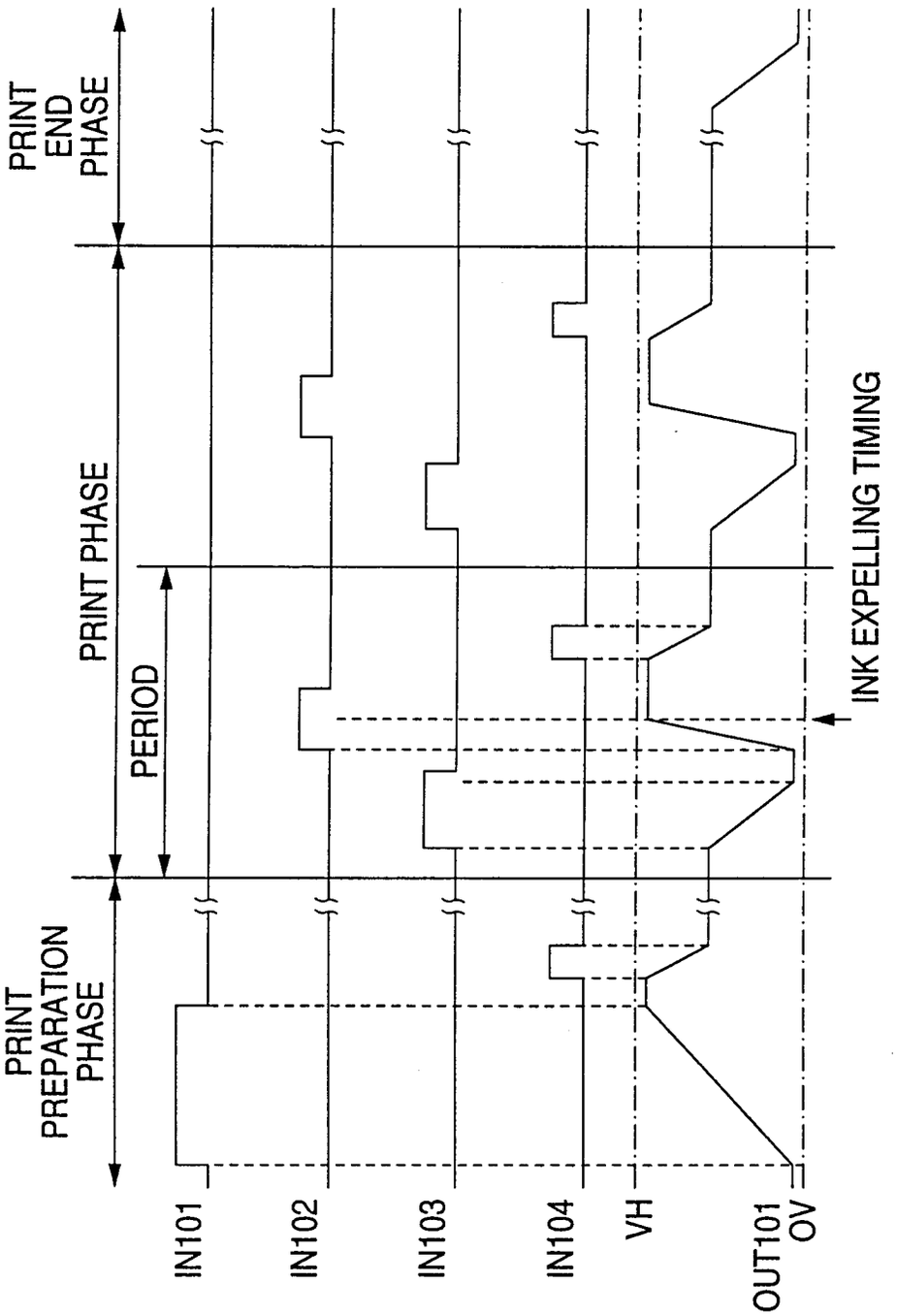

FIG. 21 (a)

FIG. 21 (b)

FIG. 21 (c)

FIG. 21 (d)

FIG. 21 (e)

FIG. 21 (f)

FIG. 20

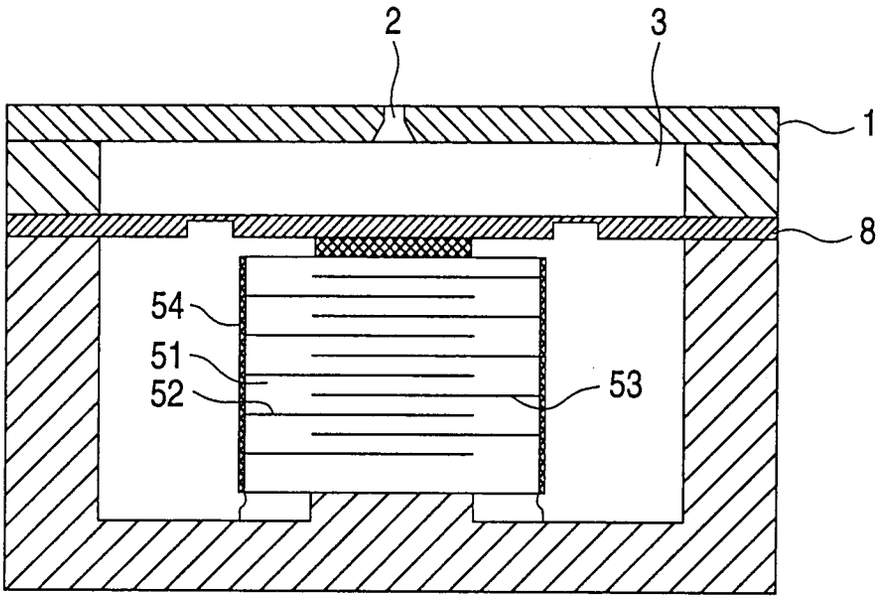
2
3
1
8
54
51
52
53

FIG. 22

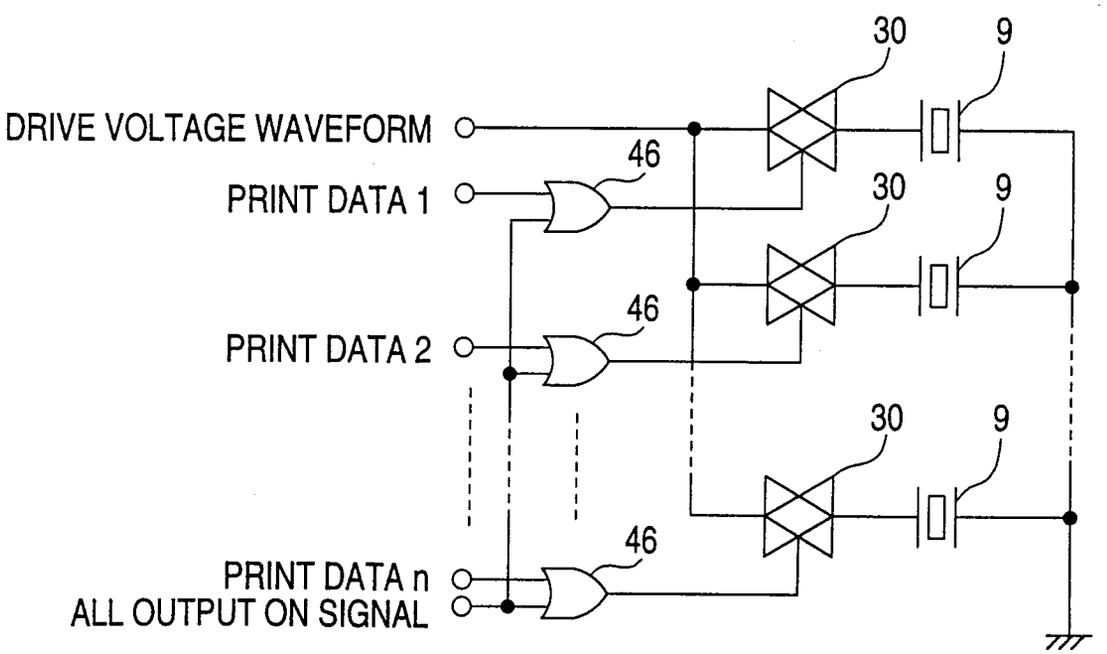
30
9
DRIVE VOLTAGE WAVEFORM
46
PRINT DATA 1
30
9
46
PRINT DATA 2
30
9
46
PRINT DATA n
ALL OUTPUT ON SIGNAL