May 10, 1955 M. G. CLAY 2,708,110

BELLEVILLE VARIETY COMPRESSION SPRINGS

Filed Sept. 25, 1953 3 Sheets-Sheet 1

Fig. 1

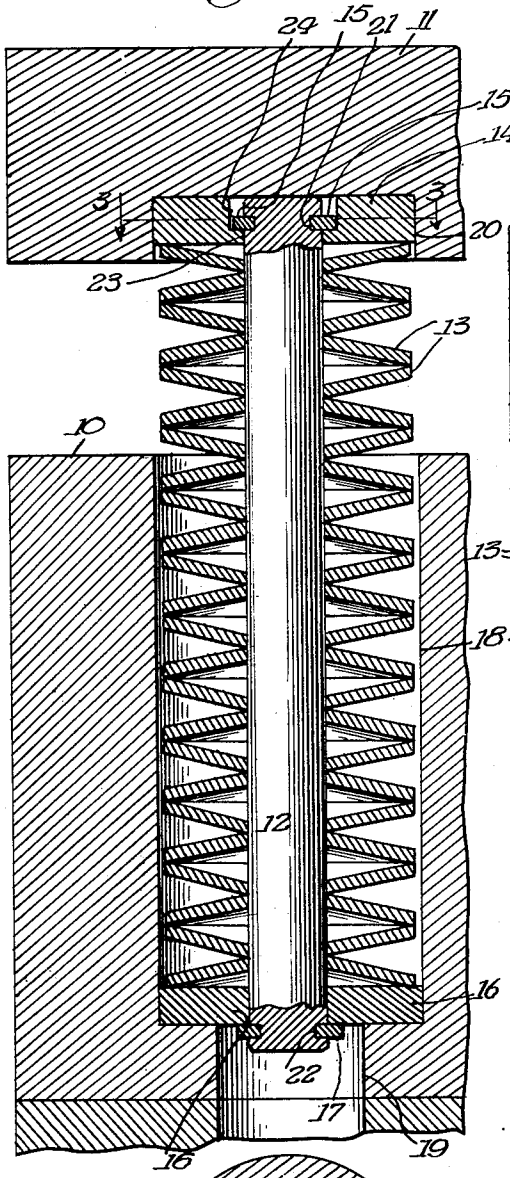

Fig. 2

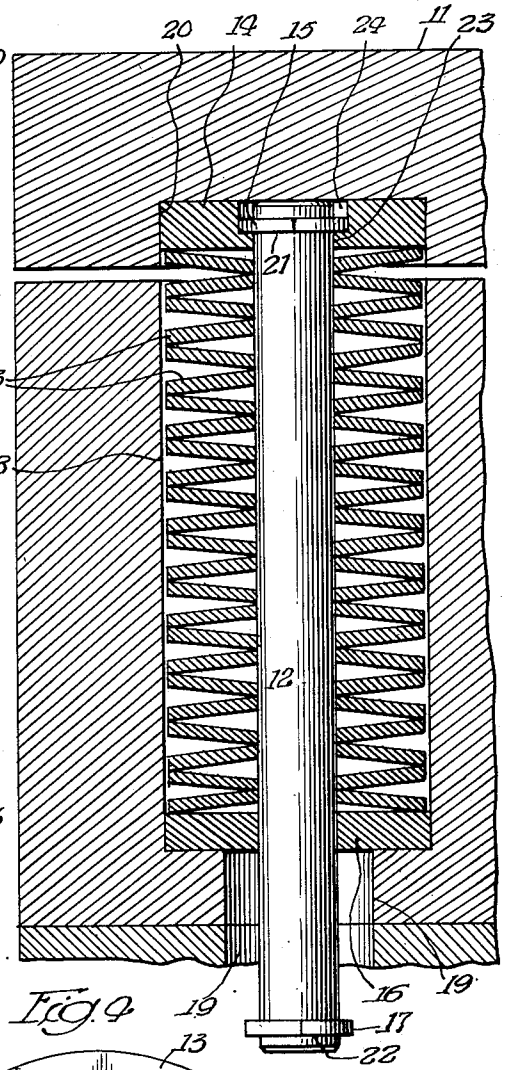

Fig. 3

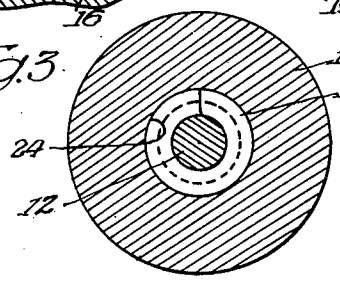

Fig. 4

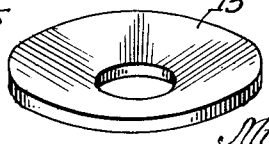

Inventor
Murray G. Clay
By: Fred Gerlach Atty.

May 10, 1955 M. G. CLAY 2,708,110

BELLEVILLE VARIETY COMPRESSION SPRINGS

Filed Sept. 25, 1953 3 Sheets-Sheet 2

Fig. 5

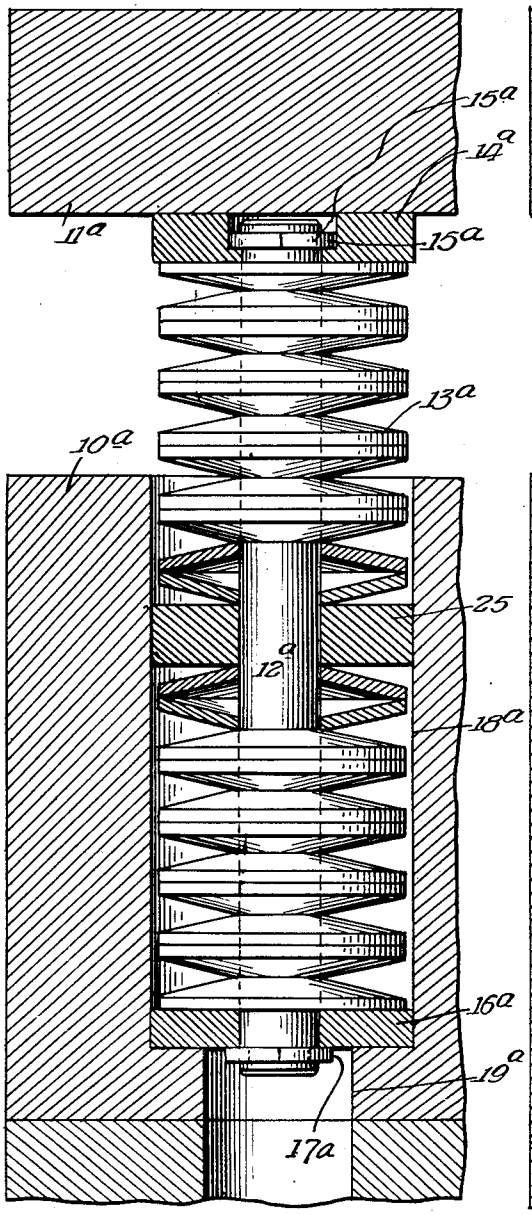

Fig. 6

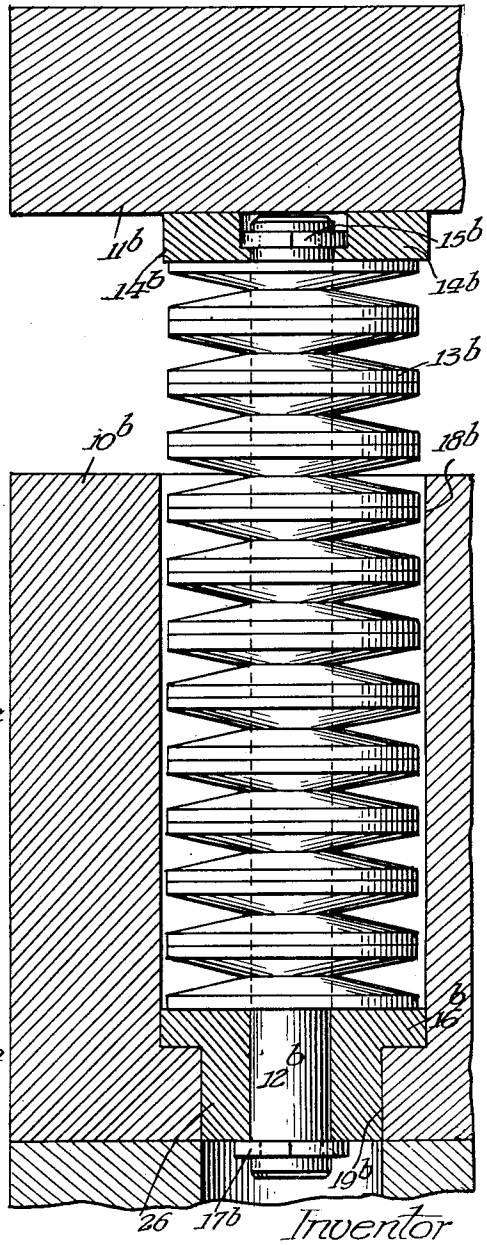

Inventor
Murray G. Clay
By Fred Gerlach Atty.

May 10, 1955 M. G. CLAY 2,708,110

BELLEVILLE VARIETY COMPRESSION SPRINGS

Filed Sept. 25, 1953 3 Sheets-Sheet 3

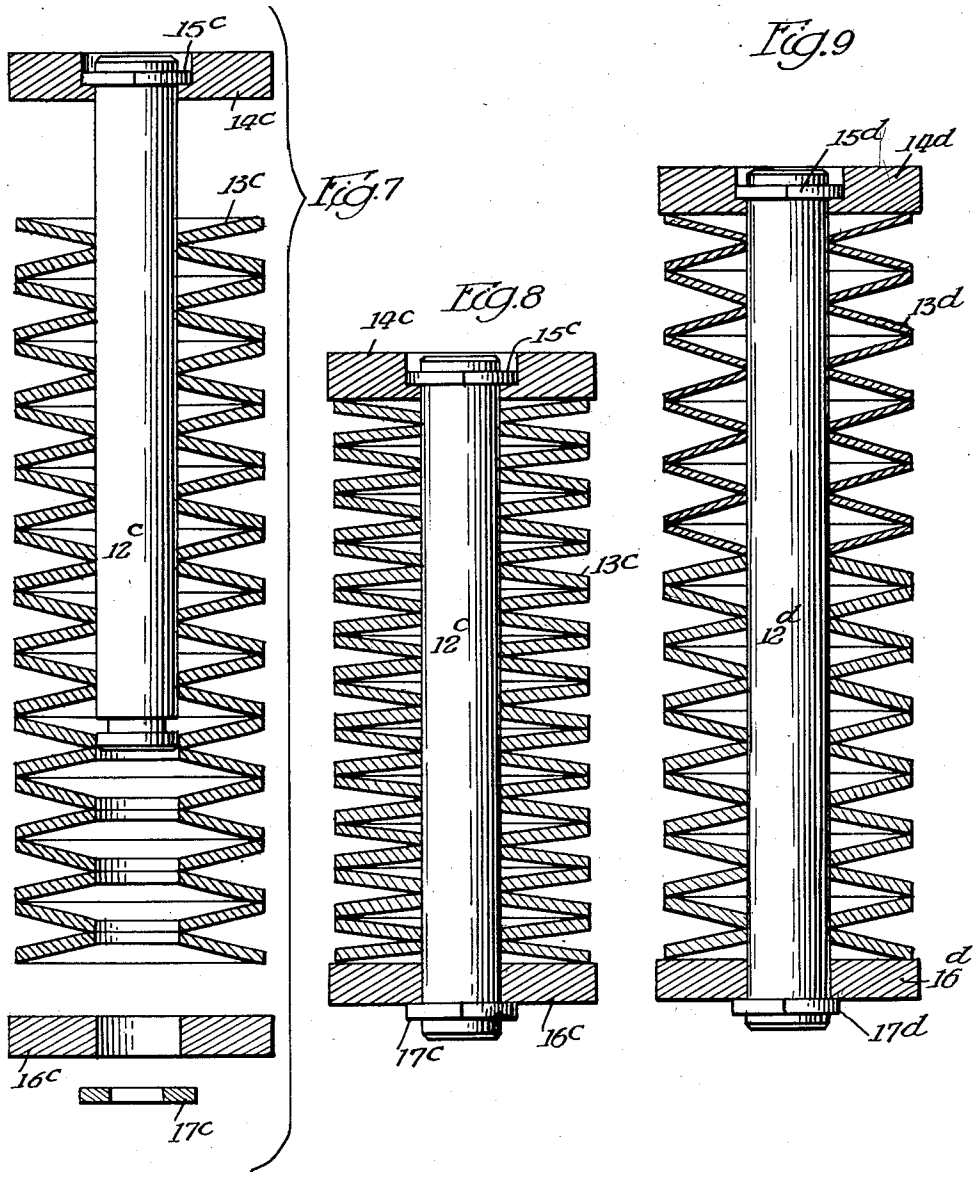

Inventor:
Murray G. Clay
By: Fred Gerlach
Atty.

United States Patent Office

2,708,110

Patented May 10, 1955

1

2,708,110

BELLEVILLE VARIETY COMPRESSION SPRINGS

Murray G. Clay, Chicago, Ill.

Application September 25, 1953, Serial No. 382,416

10 Claims. (Cl. 267—1)

The present invention relates generally to compression springs. More particularly the invention relates to that type of compression spring which is known in the art as a "Belleville" spring, has an extremely high load-volumetric displacement ratio, comprises a rectilinear or straight series of pairs of oppositely facing, complemental, frusto-conical washers and is primarily designed for use in connection with a pair of vertically spaced die members, the upper member of which is movable up and down with respect to the lower member and the lower member of which is normally stationary and has a vertically extending cylindrical open top cavity for retaining the spring.

In connection with use of a compression spring of the aforementioned type it has heretofore been customary to mount the pairs of oppositely facing, complemental, frusto-conical washers loosely in the vertically extending cylindrical open top cavity in the lower die member and to provide the upper die member with a fixed cylindrical depending stud-like element which is the same in diameter as, and is in coaxial relation with, the cavity and operates in connection with downward movement of the upper die member with respect to the lower die member to compress the washers to the end that at the end of downward movement of the upper die member the washers, in connection with expansion thereof to their normal position, force the upper die member upwards. In practice it has been found that when the pairs of oppositely facing, complemental, frusto-conical washers are mounted loosely in the spring retaining cavity in the lower die member the spring as a whole is objectionable for several reasons. In the first place, the washers, because they are not maintained in truly coaxial alignment within the cavity, become laterally offset and not only tend to bind in connection with compression and expansion of the spring, but also rub against and appreciably wear the cavity defining surface of the lower die member. Secondly, the washers, in connection with use of the spring, are likely to be displaced from their normal operative position within the cavity with the attendant possibility of being lost or misplaced or improperly positioned when returned to the cavity. Thirdly, when it is necessary to remove the spring from the cavity for repair or replacement purposes difficulty is encountered in removing the individual washers because they are loose or independent of one another and hence cannot be withdrawn from the cavity as a unit.

The principal object of this invention is to provide a "Belleville" variety compression spring which is an improvement upon, and eliminates the objections to, previously designed springs of the same general nature and is characterized by the fact that it is in the form of a unitary assembly. In general, the present compression spring comprises in addition to the rectilinear or straight series of pairs of oppositely facing, complemental, frusto-conical washers the following parts: (1) a vertical rod which extends slightly loosely through the center holes in the washers, serves to maintain the washers in alignment and against appreciable lateral displacement and is adapted to have its lower extremity positioned in a bore that extends downwards from the central portion of the bottom surface of the spring retaining cavity in the lower die member; (2) an upper retaining ring which extends around the upper extremity of the rod and is adapted to abut flatly against the upper die member; (3) a lower retaining ring which has the lower end of the rod extending slidably therethrough, is of slightly greater external diameter than the washers, is adapted to fit snugly within the bottom of the cavity, operates in conjunction with the upper retaining ring to hold the rod against lateral displacement, and serves with the rod to maintain the outer peripheries of the washers out of contact or engagement with the side surface of the spring retaining cavity in the lower die member; and (4) an abutment forming element which is connected to the lower extremity of the rod and is adapted to coact with the lower retaining ring to limit upward sliding movement of the rod with respect to such ring. By reason of the fact that the spring includes the additional parts heretofore mentioned the frusto-conical washers cannot bind against or wear away the side wall of the cavity or become lost or misplaced and the spring as a whole is in the form of a unitary assembly and hence may be readily and bodily removed from the cavity when desired.

Another object of the invention is to provide a compression spring of the last mentioned character in which the abutment forming element on the lower extremity of the washer aligning rod is in the form of a snap ring, the inner marginal portion of which fits removably in an annular groove in the lower extremity of the rod and the outer marginal portion of which projects outwards and transversely of the rod and is adapted to abut against the bottom surface of the lower retaining ring when the spring is in its expanded or extended position.

A further object of the invention is to provide a "Belleville" variety compression spring of the type and character under consideration in which the upper retaining ring embodies a counter-bore at the upper end of its center hole and is held against upward displacement with respect to the rod by way of a snap ring, the inner marginal portion of which fits removably in an annular groove in the upper extremity of the rod and the outer marginal portion of which is disposed within the aforementioned counter-bore.

A still further object of the invention is to provide a compression spring which is generally of new and improved construction, effectively and efficiently fulfills its intended purpose and is capable of being manufactured at a comparatively low cost and also assembled and dismantled with facility.

Other objects of the invention and the various advantages and characteristics of the present "Belleville" variety compression spring will be apparent from a consideration of the following detailed description.

The invention consists in the several novel features which are hereinafter set forth and are more particularly defined by claims at the conclusion hereof.

In the drawings which accompany and form a part of this specification or disclosure and in which like numerals of reference denote corresponding parts throughout the several views:

Figure 1 is a vertical section showing a compression spring embodying one form of the invention in operative relation with a pair of conventional vertically spaced die members and after the pairs of oppositely facing complemental frusto-conical washers thereof have expanded to their normal position;

Figure 2 is a vertical section showing the pressure

spring of Figure 1 after it has been compressed as the result of the upper die member being shifted downward with respect to the lower die member, and illustrating in detail the manner in which the rod and the lower retaining ring coact with the upper retaining ring to hold the washers in axial alignment and out of engagement with the side wall of the spring retaining cavity in the lower die member;

Figure 3 is a horizontal section taken on the line 3—3 of Figure 1 and showing in detail the construction, design and arrangement of the snap ring which serves to hold the upper retaining ring against upward displacement with respect to the washer aligning rod;

Figure 4 is a perspective view of one of the frusto-conical washers of the compression spring that is shown in Figures 1, 2, and 3;

Figure 5 is a view, partly in side elevation and partly in vertical section, showing a compression spring which constitutes a second form of embodiment of the invention and is characterized by the fact that it embodies a guide ring on the central portion of the rod for assisting the lower retaining ring in holding the rod against lateral displacement with respect to the spring receiving cavity in the lower die member;

Figure 6 is a view, partly in side elevation and partly in vertical section, showing a compression spring which constitutes a third form or embodiment of the invention and is characterized by the fact that the lower retaining ring through which the lower end of the washer aligning rod extends slidably, embodies an integral depending tubular stem which fits snugly within the bore in the lower die member for accommodating the lower extremity of the rod and assists the lower retaining ring in holding the rod against lateral displacement while the spring is in its operative position;

Figure 7 is a view, partly in side elevation and partly in section, showing, before assembly, a compression spring which constitutes a fourth form or embodiment of the invention and is characterized by the fact that the frusto-conical washers are at all times under compression so that the spring as a whole is what may be termed a pre-loaded spring;

Figure 8 is a view similar to Figure 7, except that it illustrates the various parts or elements of the spring in their assembled position; and

Figure 9 is a view, partly in side elevation and partly in section, showing a compression spring which embodies a fifth form or embodiment of the invention and is characterized by the fact that it has different or variable load deflection characteristics by reason of the fact that certain of the frusto-conical washers are thinner and hence weaker than the others.

Compression spring of Figures 1 to 4, inclusive

The compression spring that is shown in Figures 1 to 4, inclusive, constitutes one form of the invention and is essentially a "Belleville" spring. It is adapted for use in connection with a lower die member **10** and an upper die member **11** and as its parts or components comprises a rod **12**, a rectilinear or straight series of pairs of frusto-conical washers **13**, an upper retaining ring **14**, a snap ring **15**, a lower retaining ring **16** and a snap ring **17**.

The lower and upper die members **10** and **11** are merely illustrative of a pair of coacting members with which the compression spring may be used or employed. It is contemplated that the lower die member **10** will remain stationary and may be the male die of a conventional power operated punch press (not shown). As shown in Figures 1 and 2, the lower die member **10** embodies a vertically extending cylindrical cavity **18** for retaining the compression spring and has a bore **19** extending downwards from the bottom of the cavity. The cavity **18** is of uniform diameter from end to end and has an open top by reason of the fact that the upper end thereof

intersects the top face or surface of the lower die member **10**. The bore **19** is of materially less diameter than the cavity **18** and functions, as hereinafter described, to receive the lower extremity of the rod **12** of the spring. It is in axial alignment with the cavity and has the upper end thereof in communication with the bottom of the cavity, as shown in Figures 1 and 2. The upper die member **11** overlies the lower die member **10** and is mounted by means (not shown) so that it is movable up and down with respect to the lower die member. It is contemplated that the upper die member **11** may be a pressure pad stripper or analogous part of a punch press die and also that it will be shifted rectilinearly downwards by power and returned to its normal or starting position by the action of the compression spring. The bottom portion of the upper die member **11** is provided with an open bottom cylindrical cavity **20** which, as shown in Figures 1 and 2 of the drawings, is the same in diameter as the cavity **18** and is arranged in coaxial relation with the latter.

The rod **12** extends vertically and when the spring is in its operative position with respect to the lower and upper die members is disposed for the most part in the cylindrical open top cavity **18** in the lower die member. It is preferably formed of steel or like strong rigid metal and embodies an annular groove **21** in its upper extremity and an annular groove **22** in its lower extremity. Except for these two grooves the rod **12** is of uniform diameter from end to end. As pointed out hereafter the upper retaining ring **14** holdes the upper end of the rod **12** in centered relation with the cavity **20** in the upper die member **11** and the lower retaining ring **16** holds the lower end of the rod in centered relation with the cavity **18** in the lower die member **10**. The diameter of the rod **12** is materially less than the diameter of the bore **19** that extends or projects downwards from the central portion of the bottom of the cavity **18**. When the spring is in its operative position with respect to the upper and lower die members the upper end surface of the rod **12** is disposed adjacent the central portion of the top wall of the cavity **20** and the lower extremity of the rod is disposed within the bore **19**. In connection with downward movement of the upper die member **12** relatively to the lower die member **10** the lower extremity of the rod moves downwards in the bore **19** as shown in Figure 2.

The pairs of frusto-conical washers **13** are mounted on the rod **12** between the upper and lower retaining rings **14** and **16**. The lowermost washer of each pair faces in one direction and the uppermost washer of each pair faces in the opposite direction, as illustrated in Figures 1 and 2. The washers are preferably formed of steel or like metal and are of such thickness that they flatten when subjected to a compressive force. The rod **12** of the spring serves to hold the pairs of oppositely facing washers in axial alignment and prevents any appreciable lateral displacement of the washers. All the washers **13** are the same in size and thickness. The washers are of such internal diameter that when they are flattened their inner peripheries do not grip snugly the rod **12** (see Figure 2). In practice it has been found that the best results are obtained when the inner diameter of the washers is but slightly greater than the diameter of the rod **12** to the end that the rod serves effectively and efficiently to hold the washers in alignment and against appreciable lateral displacement. The external diameter of the washers **13** is such that when the washers are compressed their outer peripheries do not contact or engage the side wall of the cavity **18**, as shown in Figure 2 of the drawings. It is contemplated that when the upper die member **11** is in its up position the washers **13** will assume their normal frusto-conical position and that when the upper die member is shifted downwards the washers will be compressed between the upper and lower retaining rings **14** and **16**. It is also contemplated that

when the upper die member **11** is released after it is shifted downwards to its fullest extent the washers **13** will expand to their normal frusto-conical shape and thus return the upper die member to its up position with respect to the lower die member **10**.

The upper retaining ring **14** of the compression spring of Figures 1 to 4, inclusive, extends around the upper extremity of the rod **12** and is formed of steel or other suitable metal. It has flat top and bottom surfaces and fits snugly but removably in the open bottom cavity **20** in the upper die member **11**. The purpose of the upper retaining ring **14** is to center and hold against lateral displacement the upper end of the rod **12**. The flat top surface of the ring **14** fits directly against the top wall of the cavity **20** and the flat bottom surface of the upper retaining ring forms an abutment for the uppermost frusto-conical washer **13**. The center hole in the upper retaining ring **14** is designated in the drawing by the reference numeral **23** and is of such diameter that it fits snugly around the adjacent portion of the upper extremity of the rod **12**. The upper central portion of such ring is provided with a counter-bore **24** which is in concentric relation with the center hole **23** and is of slightly greater diameter than the external diameter of the snap ring **15**. The height of the counter-bore is substantially equal to the distance from he bottom of the annular groove **21** to the upper end surface of the rod. In view of the fact that the upper retaining ring **14** is shaped to fit snugly in the cavity **20** the outer diameter of the ring is greater than the outer diameter of the washers **13** when the latter are compressed or flattened to their fullest extent in connection with compressing of the spring as a whole.

The snap ring **15** is radially split, as shown in Figure 3, and serves to hold the upper retaining ring **14** against upward displacement with respect to the upper extremity of the rod **12**. It is so arranged that its inner marginal portion fits snugly within the annular groove **21** in the upper extremity of the rod **12** and its outer marginal portion fits within the counter-bore **24** and abuts against the bottom of the latter. In assembling the spring the snap ring **15** is first manipulated into interlocked relation with the annular groove **21**. Thereafter the upper retaining ring **14** is mounted around the lower end of the rod **12** and is then slid upwards until the bottom of the counter-bore **24** is brought into abutment with the outer marginal portion of the snap ring **15**.

The lower retaining ring **16** extends around the lower end of the rod **12** and is formed of steel or any other suitable metal. It fits snugly but removably within the bottom of the cavity **18** in the lower die member **10** and serves to center the rod **12** with respect to the cavity **18** and also to hold the lower end of the rod against lateral displacement. As shown in Figures 1 and 2, the bottom and top surfaces of the lower retaining ring **16** are flat. The outer portion of the flat bottom surface of the ring **16** fits flatly against the bottom wall of the cavity **18** and the flat top surface of the ring **16** forms an abutment for the lowermost washer **13**. The diameter of the center hole of the retaining ring is slightly greater than the diameter of the rod in order that the lower end of the rod is free to slide up and down with respect to the retaining ring while at the same time the retaining ring functions as heretofore pointed out. By reason of the fact that the lower retaining ring when in its operative position fits snugly within the bottom of the cavity **18** the outer diameter of such retaining ring is greater than the outer diameter of the washers when the latter are compressed or flattened and hence the lower retaining ring prevents the washers from engaging the side wall of the cavity **18** in connection with full compression of the spring as a whole. By preventing the washers from engaging the side wall of the cavity **18** the washers, in connection with compression of the spring, cannot bind or wear the side wall of the cavity **18**.

The snap ring **17** is radially split like the snap ring **15** and coacts with the lower retaining ring **16** to limit upward sliding movement of the rod **12** with respect to such ring. It is so arranged that its inner marginal portion fits snugly within the annular groove **22** in the lower extremity of the rod **12**. The outer marginal portion of the snap ring **17** projects outwards of the groove **22** and, as shown in Figure 1, abuts against the inner portion of the flat bottom surface of the lower retaining ring **16** when the spring is in its extended or expanded position. In assembling the spring the lower retaining ring **16**, after mounting of the upper retaining ring **14** and the pairs of oppositely facing complemental frusto-conical washers **13** on the rod **12**, is slid upwards on the lower end of the rod **12** to a point above the annular groove **22** and then the snap ring **17** is manipulated into interlocked relation with the groove **22**. After such manipulation of the snap ring **17** the spring as a whole is in the form of a unitary assembly. In the event that it is desired to dismantle the spring in order to replace any of the frusto-conical washers **13** it is only necessary to remove the snap ring **17**. After removal of the snap ring the lower retaining ring **16**, as well as the washers, may be slid downwards out of encircling relation with the rod **12**.

When it is desired to install the spring the upper die member **11** is raised so as fully to expose the cavity **18** in the lower die member **10**. Thereafter the spring in assembled form is inserted downwards into the cavity **18** until the lower retaining ring **16** bottoms or abuts against the bottom wall of the cavity. After such manipulation the upper die member **11** is lowered until the upper retaining ring **14** is located within the open bottom cavity **20**. After mounting in place the spring operates as hereinbefore indicated.

The spring of Figures 1, 2, 3 and 4 of the drawings is essentially a unitary assembly and may be readily and easily mounted in place and withdrawn. It is capable of being manufactured at a comparatively low cost and, due to its particular construction or design, eliminates any possibility of the frusto-conical washers binding or wearing away the side wall of the cavity in the lower die member. By reason of the fact that the spring includes the snap rings **15** and **17**, assembly and dismantlement of the spring may be readily effected.

Compression spring of Fig. 5

The compression spring that is illustrated in Figure 5 constitutes a second form or embodiment of the invention. It is adapted for use with a lower die member **10*a*** and an upper die member **11*a*** and comprises a vertically extending rod **12*a***, a series of pairs of oppositely facing complemental frusto-conical washers **13*a*** on the rod, an upper retaining ring **14*a*** around the upper extremity of the rod, a snap ring **15*a*** for limiting upward displacement of the upper retaining ring **14*a*** with respect to the rod **12*a***, a lower retaining ring **16*a*** around the lower end of the rod **12*a*** and a snap ring **17*a*** for limiting upward sliding movement of the rod with respect to the lower retaining ring. As an additional part the spring comprises a guide ring **25**. The lower die member **10*a*** is like the lower die member **10** and embodies a vertically extending cylindrical open top cavity **18*a*** and a bore **19*a*** leading downwards from the central portion of the bottom wall of the cavity **18*a***. The upper die member **11*a*** is similar to the upper die member **11** except that instead of having an open bottom cylindrical cavity it has a flat bottom surface. The rod **12*a***, the washers **13*a***, the upper retaining ring **14*a***, the snap ring **15*a***, the lower retaining ring **16*a*** and the snap ring **17*a*** are the same as, and function similarly to, the corresponding parts of the "Belleville" variety compression spring of Figures 1 to 4, inclusive. The upper retaining ring **14*a*** abuts against the flat bottom surface of the vertically movable upper die member **11*a*** and hence it is not so interlocked with the upper die member

as to coact with the lower retaining ring **16a** in positively centering the rod **12a** with respect to the cylindrical open top cavity **18a** and holding the rod against lateral displacement. The guide ring **25** surrounds the central portion of the rod **12a** and it, instead of the upper retaining ring **14a**, coacts with the lower retaining ring **16a** in the bottom of the cavity **18a** to center the rod **12a** and to prevent lateral displacement thereof. Preferably the guide ring **25** is formed of bronze or like material having a comparatively low coefficient of friction. As shown in Figure 5, the guide ring **25** is interposed between two adjoining pairs of washers and has the same external diameter as the lower retaining ring **16a**. The diameter of the center hole of the guide ring **25** is but slightly greater than the diameter of the rod **12a** in order that the rod is free to slide with respect to the guide ring while at the same time the guide ring holds the central portion of the rod against lateral displacement. The outer periphery of the guide ring **25** is cylindrical and engages slidably the adjacent portion of the side wall of the cavity **18a**.

The compression spring of Figure 5 has the same advantages and characteristics as the spring of Figures 1 to 4, inclusive, and is expressly designed for use when the vertically movable upper die member has no open bottom cavity for snugly receiving the upper retaining ring **14a**.

Compression spring of Figure 6

The compression spring that is illustrated in Figure 6 constitutes a third form or embodiment of the invention. It is adapted for use with a lower die member **10b** and an upper die member **11b** and comprises a vertically extending rod **12b**, a series of pairs of oppositely facing complemental frusto-conical washers **13b** on the rod, an upper retaining ring **14b** around the upper extremity of the rod, a snap ring **15b** for limiting upward displacement of the upper retaining ring **14b** with respect to the rod **12b**, a lower retaining ring **16b** around the lower end of the rod **12b**, and a snap ring **17b** for limiting upward sliding movement of the rod with respect to the lower retaining ring **16b**. The lower die member **10b** is the same as the lower die members **10** and **10a** and embodies a vertically extending cylindrical open top cavity **18b** and a bore **19b** leading downwards from the central portion of the bottom wall of the cavity **18b**. The upper die member **11b** is similar to the upper die member **11a** and has the upper retaining ring **14b** in abutment with its flat bottom surface. The rod **12b**, the washers **13b**, the upper retaining ring **14b**, the snap ring **15b**, the lower retaining ring **16b** and the snap ring **17b** are the same in construction as, and operate similarly to, the corresponding parts of the spring of Figure 5. The spring of Figure 6 is the same as the spring of Figure 5 except that instead of having a bronze guide ring **25** around the central portion of its vertically extending rod it embodies an integral depending tubular stem **26** on the lower retaining ring **16b**. The stem fits snugly but removably in the upper end of the bore **19b** and coacts with the lower retaining ring **16b** to center the rod **12b** with respect to the cavity **18b** and also to hold the rod against lateral displacement. The inner periphery of the stem **26** is the same in diameter as, and forms a continuation of, the rod receiving center hole in the lower retaining ring **16b**.

The compression spring of Figure 6 has the same advantages and characteristics as the spring of Figures 1 to 4, inclusive, and the spring of Figure 5 and is, in effect, a modification of the spring of Figure 5 in that it embodies the integral depending tubular stem **26** instead of the guide ring **25**.

Compression spring of Figures 7 and 8

The spring that is shown in Figures 7 and 8 constitutes a fourth form or embodiment of the invention. It comprises a vertically extending rod **12c**, a series of pairs of oppositely facing complemental frusto-conical washers **13c** on the rod **12c**, an upper retaining ring **14c** around the upper extremity of the rod, a snap ring **15c** for limiting upward displacement of the upper retaining ring with respect to the upper end of the rod, a lower retaining ring **16c** and a snap ring **17c** for limiting upward sliding movement of the lower end of the rod **12c** with respect to the lower retaining ring, and is the same as the "Belleville" variety compression spring of Figures 1 to 4, inclusive, except that the washers **13c** thereof are under partial compression when the spring is in its assembled form to the end that the spring is essentially a pre-loaded compression spring.

The spring of Figures 7 and 8 is designed for use when it is desired to obtain a fairly uniform spring force over the normal range of vertical movement of the upper die member with which the spring is associated. As shown in Figure 7 the series of pairs of washers **13c**, before mounting on the rod **12c**, is of materially greater length than the portion of the rod that is between the bottom surface of the upper retaining ring **14c** and the snap ring **17c** for the lower retaining ring **16c**. In connection with assembly of the spring of Figures 7 and 8 the pairs of frusto-conical washers **13c** are axially aligned with the lower end of the rod **12c** after the upper retaining ring **14c** is mounted in place but before application of the lower retaining ring **16c**. Thereafter the lower retaining ring **16c** is placed against the lowermost washer and is shifted upwards so as partially to compress the washers between it and the upper retaining ring. After the lower retaining ring has been shifted upwards past the annular groove for the snap ring **17c** such snap ring is manipulated into place. After the snap ring **17c** is in interlocked relation with its annular groove in the lower extremity of the rod **12c** the spring is in completely assembled form and the washers **13c** are in a partially compressed state.

The compression spring of Figures 7 and 8 possesses the same advantages and characteristics as the spring of Figures 1 to 4, inclusive, and differs from the last mentioned spring only in that the frusto-conical washers thereof are under partial compression when the spring is in its normally extended or expanded position.

The compression spring of Fig. 9

The compression spring of Figure 9 constitutes a fifth form or embodiment of the invention and comprises a vertically extending rod **12d**, a series of pairs of oppositely facing complemental frusto-conical washers **13d**, an upper retaining ring **14d** around the upper extremity of the rod, a snap ring **15d** for limiting upward displacement of the upper retaining ring with respect to the upper end of the rod, a lower retaining ring **16d** around the lower extremity of the rod **12d**, and a snap ring **17d** for limiting upward sliding movement of the lower end of the rod with respect to the lower retaining ring **16d**. It is the same in design and construction as the compression spring of Figures 1 to 4, inclusive, except that some of the frusto-conical washers thereof are of one thickness and the others are of a different thickness instead of all being of the same thickness. As shown in Figure 9 the frusto-conical washers constituting the upper half of the series of pairs of washers are materially thinner than the washers constituting the lower half of the series. As the result of this the thin washers, in connection with compression of the spring, compress before the thick washers and thus the spring as a whole has two pressure gradients. In other words, but a comparatively small compressive force is necessary initially to compress the spring and then a greater force is required to compress the spring to its fullest extent. It is contemplated that if more than two pressure gradients are desired certain of the washers will be comparatively thin, others will be thicker and the remaining washers will be of still greater thickness. It is also contemplated that the thin and thick washers, instead of being arranged as shown in Figure 9,

may be arranged in oppositely facing pairs, i. e., arranged so that there is one thin washer in opposed relation with a thick washer.

The compression spring of Figure 9 has the same advantages as the spring of Figures 1 to 4, inclusive, and differs therefrom only in that the frusto-conical washers have different load deflection characteristics because some are of one thickness and some are of a different thickness.

Whereas the various compression springs constituting the invention have been described as being adapted for use in connection with coacting die members it is to be understood that they may be employed in other capacities, that is, with members other than die members. It is also to be understood that the invention is not to be restricted to the details set forth since these may be modified within the scope of the appended claims without departing from the spirit and scope of the invention.

Having thus described the invention what I claim as new and desire to secure by Letters Patent is:

1. In combination with a pair of opposed coacting members, one of which is movable to and from the other and the other of which embodies a cylindrical cavity in intersecting relation with the surface thereof that faces the one member, and also embodies a bore in communication with, and leading away from, the central portion of the inner end of the cavity, a "Belleville" variety compression spring adapted to move the one member away from the other member after it has been moved toward said other member, disposed for the most part in the cavity, and comprising a rod positioned in centered relation with the cavity, provided at one end thereof with a transversely extending element in abutment with the one member, having its other end extending into the bore, and adapted in response to movement of the one member toward the other member to move inwards with respect to the cavity and partially into the bore, a retaining ring fitting snugly but removably within the inner end of the cavity, having said other end of the rod extending slidably through its center hole, and serving to hold the rod in centered relation with the cavity and against lateral displacement, and a series of washers mounted on the rod between the transversely extending element and the retaining ring, certain of said washers being frusto-conical, said washers being so proportioned that when the spring as a whole is compressed to its fullest extend their external diameter is less than the diameter of the cavity and hence the outer peripheries thereof are at all times out of engagement with the side wall of the cavity.

2. In combination with a pair of opposed coacting members, one of which is movable to and from the other and the other of which embodies an elongated cylindrical cavity facing the one member, and in addition a bore in communication with, and leading away from, the central portion of the inner end of the cavity, a unitary "Belleville" variety compression spring adapted to move the one member away from the other member after it has been moved toward said other member, disposed for the most part in the cavity, and comprising a rod positioned in centered relation with the cavity, provided at one end thereof with a transversely extending element in abutment with the one member, having its other end extending into the bore, and adapted in response to movement of the one member toward the other member to move inwards with respect to the cavity and partially into the bore, a retaining ring fitting snugly but removably within the inner end of the cavity, having said other end of the rod extending slidably through its center hole, and serving to hold the rod in centered relation with the cavity and against lateral displacement, a series of pairs of oppositely facing complemental frusto-conical washers mounted on the rod between the transversely extending element and the retaining ring, said washers being so proportioned that when compressed to their fullest extent their external diameter is less than the diameter of the cavity and hence the outer peripheries thereof are at all times out of engagement with the side wall of the cavity, and an abutment forming element connected to, and extending laterally from, the outer extremity of said other end of the rod and adapted so to coact with the retaining ring as to limit sliding movement of the rod in the direction of said one member.

3. In combination with a pair of opposed coacting members, one of which is movable to and from the other and the other of which embodies a cylindrical cavity in intersecting relation with the surface thereof that faces the one member, and also embodies a bore in communication with, and leading away from, the central portion of the inner end of the cavity, a "Belleville" variety compression spring adapted to move the one member away from the other member after it has been moved toward said other member, disposed for the most part in the cavity, and comprising a rod positioned in centered relation with the cavity, provided at one end thereof with a transversely extending element in abutment with the one member, having its other end extending into the bore and provided at its extremity with an annular groove, and adapted in response to movement of the one member toward the other member to move inwards with respect to the cavity and partially into the bore, a retaining ring fitting snugly but removably within the inner end of the cavity, having said other end of the rod extending slidably through its center hole, and serving to hold the rod in centered relation with the cavity and against lateral displacement, a series of washers mounted on the rod between the transversely extending element and the retaining ring, certain of said washers being frusto-conical, said washers being so proportioned that when the spring as a whole is compressed to its fullest extent their external diameter is less than the diameter of the cavity and hence the outer peripheries thereof are at all times out of engagement with the side wall of the cavity, and a snap ring having the inner marginal portion thereof fitting within said groove and its outer marginal portion adapted so to coact with the retaining ring as to limit sliding movement of the rod in the direction of said one member.

4. In combination with a pair of opposed coacting members, one of which is movable to and from the other and embodies a shallow cylindrical cavity facing the latter and the other of which embodies an elongated cylindrical cavity facing, and in coaxial relation with, the first mentioned cavity, and also embodies a bore in communication with, and leading away from, the central portion of the inner end of the second mentioned cavity, a "Belleville" variety compression spring adapted to move the one member away from the other member after it has been moved toward said other member, disposed for the most part in the second mentioned cavity, and comprising a rod positioned in centered relation with the two cavities, having one end thereof disposed in the first mentioned cavity, having its other end extending into the bore, and adapted in response to movement of the one member toward the other member to move inwards with respect to the second mentioned cavity and partially into the bore, a first retaining ring extending snugly around said one end of the rod and fitting snugly but removably in the first mentioned cavity, a second retaining ring fitting snugly but removably within the inner end of the second mentioned cavity, having said other end of the rod extending slidably through its center hole, and serving with the first retaining ring to hold the rod in centered relation with the two cavities and against lateral displacement, a series of washers mounted on the rod between the two retaining rings, certain of said washers being frusto-conical, said washers being so proportioned that when the spring as a whole is compressed to its fullest extent their external diameter is less than the diameter of the second mentioned cavity

and hence the outer peripheries thereof are at all times out of engagement with the side wall of said second mentioned cavity, and an abutment forming element connected to the extremity of said other end of the rod and adapted upon expansion of the washers after compression of the spring so to coact with the second retaining ring as to limit sliding movement of the rod in the direction of said one member.

5. In combination with a pair of opposed coacting members, one of which is movable to and from the other and embodies a shallow cylindrical cavity facing the latter and the other of which embodies an elongated cylindrical cavity that is of the same diameter as the first mentioned cavity and faces, and is in coaxial relation with, the latter, and also embodies a bore in communication with, and leading away from, the central portion of the inner end of the second mentioned cavity, a "Belleville" variety compression spring adapted to move the one member away from the other member after it has been moved toward said other member, disposed for the most part in the second mentioned cavity and comprising a rod positioned in centered relation with the two cavities, having one end thereof disposed in the first mentioned cavity, having its other end extending into the bore, and adapted in response to movement of the one member toward the other member to move inwards with respect to the second mentioned cavity and partially into the bore, a first retaining ring extending snugly around, and operatively connected to, said one end of the rod and fitting snugly but removably in the first mentioned cavity, a second retaining ring fitting snugly but removably within the inner end of the second mentioned cavity, having said other end of the rod extending slidably through its center hole, and serving with the first retaining ring to hold the rod in centered relation with the two cavities and against lateral displacement, a series of pairs of oppositely facing complemental frusto-conical washers mounted on the rod between the two retaining rings, said washers being so proportioned that when compressed to their fullest extent their external diameter is less than the diameter of the second mentioned cavity and hence the outer peripheries thereof are at all times out of engagement with the side wall of said second mentioned cavity, and an abutment forming element connected to, and extending laterally from, the outer extremity of said other end of the rod and adapted so to coact with the second retaining ring as to limit sliding movement of the rod in the direction of said one member.

6. In combination with a pair of opposed coacting members, one of which is movable to and from the other and the other of which embodies an elongated cylindrical cavity facing the one member and also embodies a bore in communication with, and leading away from, the central portion of the inner end of the cavity, a "Belleville" variety compression spring adapted to move the one member away from the other member after it has been moved toward said other member, disposed for the most part in the cavity and comprising a rod positioned in centered relation with the cavity, provided at one end thereof with a transversely extending element in abutment with the one member, having its other end extending into the bore, and adapted in response to movement of the one member toward the other member to move inwards with respect to the cavity and partially into the bore, a retaining ring fitting snugly but removably within the inner end of the cavity, having said other end of the rod extending slidably through its center hole, and serving to hold the rod in centered relation with the cavity and against lateral displacement, a series of washers mounted on the rod between the transversely extending element and the retaining ring, certain of said washers being frusto-conical, said washers being so proportioned so that when the spring as a whole is compressed to its fullest extent in connection with movement of the one member toward the other member their external diameter is less than the diameter of the cavity and hence the outer peripheries thereof are at all times out of engagement with the side wall of the cavity, and a guide ring mounted slidably on the central portion of the rod, disposed between certain of the washers, having its outer periphery in sliding engagement with the side wall of the cavity, and serving to assist the retaining ring in holding the guide rod in centered relation with the cavity and against lateral displacement.

7. In combination with a pair of opposed coacting members, one of which is movable to and from the other and the other of which embodies an elongated cylindrical cavity facing the one member and also embodies a bore in communication with, and leading away from, the central portion of the inner end of the cavity, a "Belleville" variety compression spring adapted to move the one member away from the other member after it has been moved toward said other member, disposed for the most part in the cavity and comprising a rod positioned in centered relation with the cavity, provided at one end thereof with a transversely extending element in abutment with the one member, having its other end extending into the bore, and adapted in response to movement of the one member toward the other member to move inwards with respect to the cavity and partially into the bore, a retaining ring fitting snugly but removably within the inner end of the cavity, having said other end of the rod extending slidably through its center hole, provided with an integral tubular extension fitting snugly within the bore, and serving to hold the rod in centered relation with the cavity and against lateral displacement, and a series of washers mounted on the rod between the transversely extending element and the retaining ring, certain of said washers being frusto-conical, said washers being so proportioned so that when the spring as a whole is compressed to its fullest extent in connection with movement of the one member toward the other member their external diameter is less than the diameter of the cavity and hence the outer peripheries thereof are at all times out of engagement with the side wall of the cavity.

8. As a new article of manufacture, a unitary "Belleville" variety compression spring comprising a rod with an annular groove in the extremity of one end thereof, a first retaining ring extending snugly around said one end of the rod and having a counter-bore at the outer end of the center hole and normally in surrounding relation with the groove, a snap ring having the inner marginal portion thereof fitting in said groove and its outer marginal portion disposed in the counter-bore and serving to maintain the first retaining ring against displacement away from the rod, a second retaining ring having the same external diameter as the first retaining ring and having the other end of the rod extending slidably through its center hole, an abutment-forming element connected to, and projecting laterally from, the extremity of said other end of the rod and adapted to coact with the second retaining ring to limit sliding movement of the rod with respect to said second retaining ring in a direction toward the first retaining ring, and a series of pairs of oppositely facing complemental frusto-conical washers mounted on the rod between the two retaining rings and so proportioned that when they are fully compressed in connection with sliding movement of the two retaining rings towards one another their external diameter is less than that of said retaining rings.

9. As a new article of manufacture, a unitary "Belleville" variety compression spring comprising a rod with annular grooves in the extremities of the ends thereof, a first retaining ring extending closely around one end of the rod and having a counter-bore at the outer end of its central hole and normally in surrounding relation with the adjoining groove, a snap ring having the inner marginal portion thereof fitting in the last mentioned groove and its outer marginal portion disposed in the counter-bore and serving to maintain the first retaining ring against displacement away from the rod, a second retaining ring having the same external diameter as the first retaining

ring and having the other end of the rod extending slidably through its center hole, a snap ring having the inner marginal portion thereof fitting within the groove in the extremity of said other end of the rod and its outer marginal portion adapted to coact with the second retaining ring to limit sliding movement of the rod with respect to said second retaining ring in a direction towards the first retaining ring, and a series of pairs of oppositely facing complemental frusto-conical washers mounted on the rod between the two retaining rings and so proportioned that when they are fully compressed in connection with sliding movement of the two retaining rings towards one another their external diameter is less than that of said retaining rings.

10. As a new article of manufacture, a unitary "Belleville" variety compression spring comprising a rod, a laterally enlarged element connected to one end of the rod so that it is maintained against displacement away from the rod, a retaining ring having the other end of the rod extending slidably through its center hole, an abutment-forming element connected to, and projecting laterally from, the extremity of said other end of the rod and adapted to coact with the retaining ring to limit sliding movement of the rod with respect to said retaining

ring in a direction towards the enlarged element, and a series of washers mounted on the rod between the enlarged element and the retaining ring, certain of said washers being frusto-conical, said washers being so proportioned that when the spring is fully compressed by movement of said enlarged element and the retaining ring towards one another their external diameter is less than that of said retaining ring, and a guide ring mounted slidably on the rod between certain adjoining washers and having the same external diameter as the retaining ring.

References Cited in the file of this patent

UNITED STATES PATENTS

186,538	Burr	Jan. 23, 1877
1,763,146	Goodwin	June 10, 1930
2,387,266	Holland	Oct. 23, 1945
2,417,715	Stewart	Mar. 18, 1947
2,595,642	Daland	May 6, 1952

FOREIGN PATENTS

27,336	Great Britain	1908
16,905	Great Britain	1909
250,561	Italy	Oct. 21, 1926