Aug. 21, 1923. 1,465,777

J. S. CANTELO

SHOE RACK

Filed Oct. 28, 1921 3 Sheets-Sheet 1

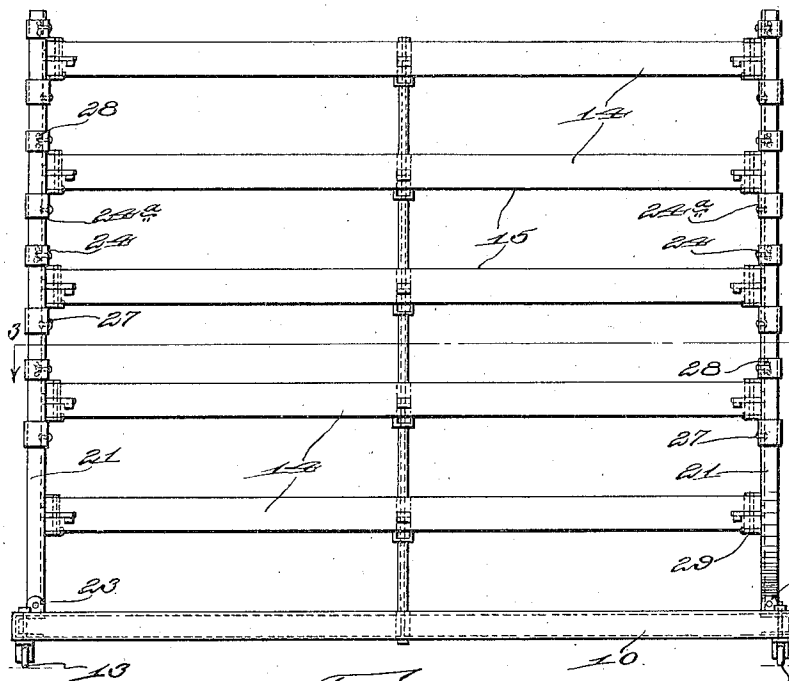

Fig. 1.

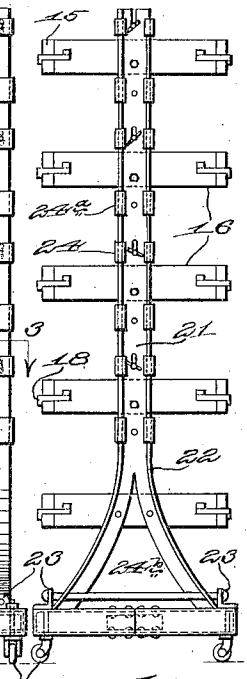

Fig. 2

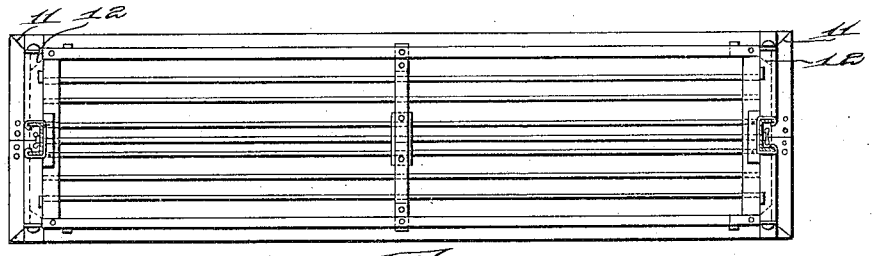

Fig. 3.

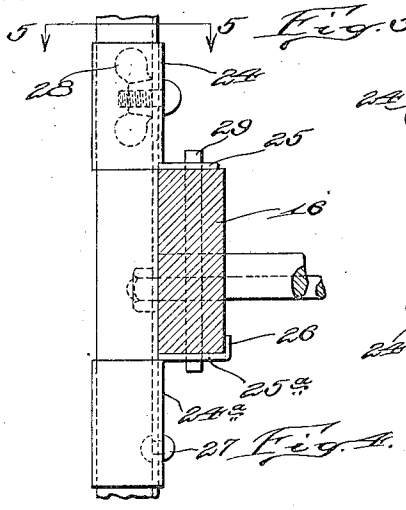

Fig. 4.

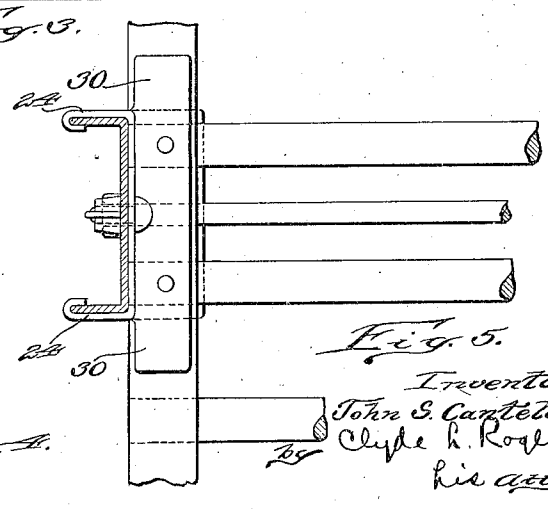

Fig. 5.

Inventor:
John S. Cantelo
Clyde L. Rogers
His Atty.

Aug. 21, 1923. 1,465,777

J. S. CANTELO

SHOE RACK

Filed Oct. 28, 1921 3 Sheets-Sheet 2

Fig. 6.

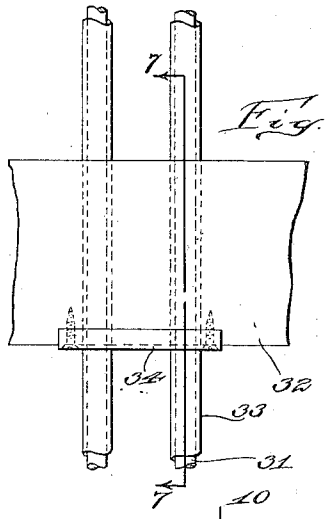

Fig. 7.

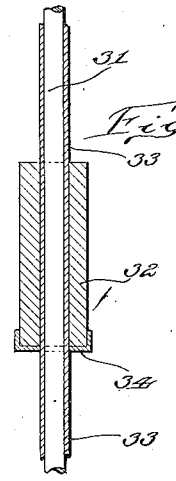

Fig. 8.

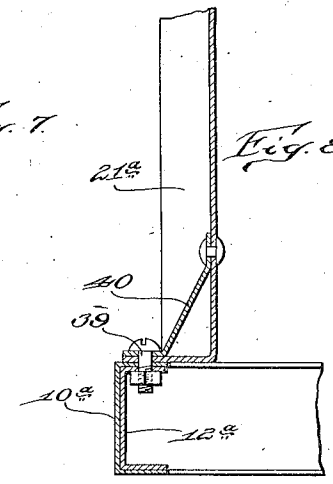

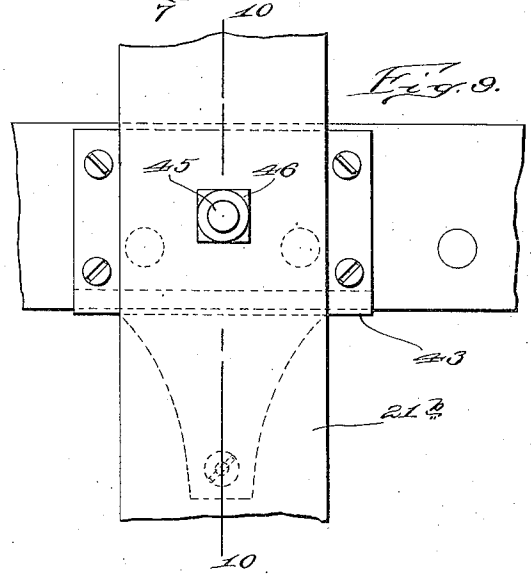

Fig. 9.

Fig. 10.

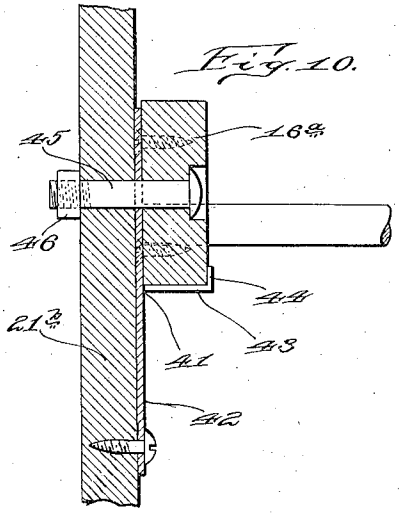

Fig. 11.

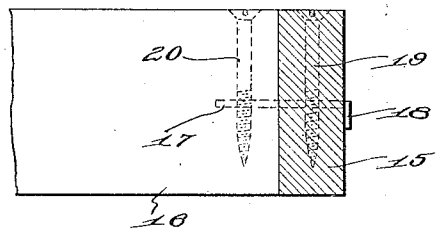

Fig. 12.

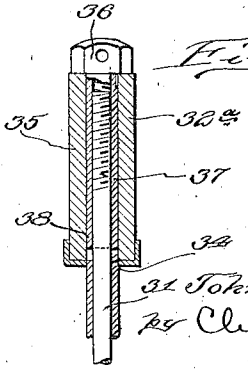

Inventor.
John S. Cantelo
By Clyde L. Rogers
his atty

Aug. 21, 1923. **1,465,777**

J. S. CANTELO

SHOE RACK

Filed Oct. 28, 1921 3 Sheets-Sheet 3

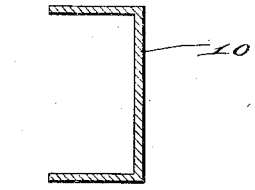

Fig. 15.

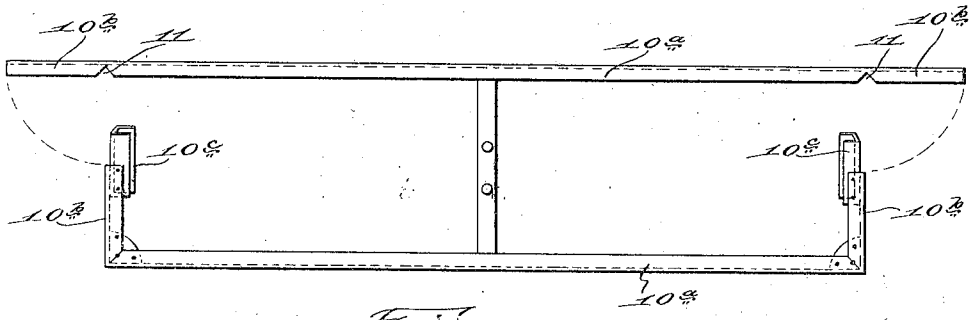

Fig. 12.

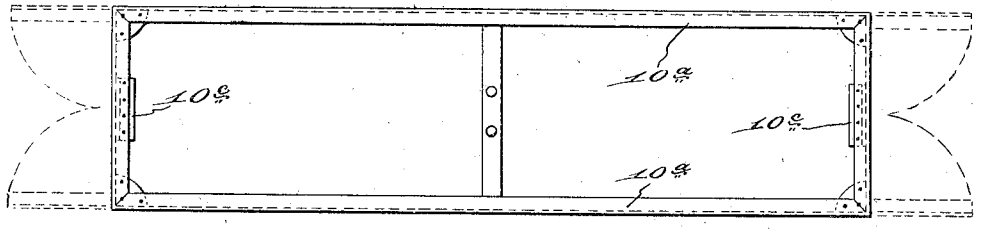

Fig. 13.

Inventor:
John S. Cantelo
by Clyde L. Rogers
his atty.

Patented Aug. 21, 1923. 1,465,777

UNITED STATES PATENT OFFICE.

JOHN S. CANTELO, OF EAST CAMBRIDGE, MASSACHUSETTS.

SHOE RACK.

Application filed October 28, 1921. Serial No. 511,014.

To all whom it may concern:

Be it known that I, JOHN S. CANTELO, a citizen of the United States, and resident of East Cambridge, county of Middlesex, Commonwealth of Massachusetts, have invented an Improvement in Shoe Racks, of which the following description, in connection with the accompanying drawings, is a specification, like characters on the drawings representing like parts in each of the several views.

This invention relates to racks for holding and moving objects from place to place, and while having other and more general fields of usefulness is well adapted and especially designed for holding and conveying shoes from one department of a shoe factory to another, in the courses of their manufacture. A prime object of the invention is to provide a shoe rack wherein the series of spaced apart trays or shelves constituting the shoe holders, are supported and held rigidly in spaced relation from a truck base by means of unitary uprights extending up from the ends of the truck transversely central of the rack and thus spaced a substantial distance from the corners of the rack trays. In accordance with my invention I am enabled to produce a rack thus held by unitary transversely central uprights at the ends of the rack either in metal or in wood, that is strong and rigid, capable of withstanding the severest use in shoe factories without becoming loose in the joints or rickety. A further object is to provide an improved construction whereby any looseness or play that might arise from shrinkage of the wood or wear of the metal may be easily and quickly taken up so that the rack is maintained rigid and serviceable. A further object is to provide an improved construction permitting convenient taking down and folding up of the rack when required and permitting also a quick and easy reassemblage and setting up thereof. A further object is to provide improved means for bracing and holding spaced the several shelves or trays of the rack at an intermediate or central point lengthwise thereof, this means including a device adapted to be readily taken up or adjusted to compensate for shrinkage or wear and restore rigidity to the structure. Still further objects are to provide improvements in features of assemblage between the various parts of the structure whereby with a minimum of material and the smallest possible number of parts a strong and rigid rack either entirely of metal, or partly of metal and partly in wood may be produced. The foregoing and other objects and advantages of the invention will more fully appear from the following detailed description, and the distinctive features of novelty will be pointed out in the appended claims.

Referring to the drawings:

Fig. 1 is a side elevation of a rack constructed in accordance with my invention;

Fig. 2 is an end view thereof;

Fig. 3 is a horizontal section on the line 3—3 of Fig. 1;

Fig. 4 is a fragmentary detail showing a portion of one end of the rack enlarged and with a cross bar of one of the shelves in transverse section;

Fig. 5 is a transverse section on line 5—5 of Fig. 4;

Fig. 6 is an enlarged fragmentary elevation looking endwise of the rack and showing the intermediate spacing and bracing members and the manner in which they are engaged with a cross bar;

Fig. 7 is a transverse section on the line 7—7 of Fig. 6;

Fig. 8 is a sectional detail of one end of the rack showing a modification;

Fig. 9 is a detail elevation showing a modified form of end supporting unit and correspondingly modified form of securing the cross bars thereto;

Fig. 10 is a transverse section on line 10—10 of Fig. 9;

Fig. 11 is a sectional detail showing the manner of securing the cross pieces to the lengthwise extending bars;

Fig. 12 is a sectional detail showing the device for adjusting the tie rods which constitute the intermediate spacing and bracing members of the rack;

Fig. 13 is a plan view showing the truck of my invention and illustrating the manner of formation thereof;

Fig. 14 is a perspective view further illustrating the manner of making the truck and showing a preliminary operation in the bending thereof; and

Fig. 15 is a transverse section showing full size the channel iron employed for making the truck.

I provide a truck 10 preferably as shown, of channel iron, mitered at its corners as seen at 11 and having suitable reinforcing

plates 12 bolted or riveted into said corners. The truck thus constituted has side rails 10^a and end rails composed of extensions 10^b of the side rails, bent at right angles at the mitered corners 11. These extensions 10^b from the respective side rails preferably are proportioned so as to meet midway of the ends of the truck where their extremities are in abutting relation. These bent-in end portions 10^b are then joined and made rigid to constitute continuous end rails by suitable bonding members shown as channel iron pieces 10^c which are riveted or otherwise secured to the rail portions 10^b adjacent the extremities thereof, making the same strong and rigid and rendering the truck thus formed, a strong and reliable base for the shoe rack. This truck base is equipped with suitable casters 13. The series of shelves or trays for holding the shoes are indicated at 14 these trays being formed of lengthwise extending bars 15 and cross bars 16. The lengthwise bars 15 and cross bars 16 may be secured together in any suitable manner but for rigidity and simplicity combined, I preferably slot the bars 15 at the point where the bars 16 abut thereagainst and also slot the ends of the bars 16 in register therewith, and insert a locking piece or plate 17 into such slot, this plate having as shown a turned down end 18 and being apertured to receive the screws 19, 20 which are driven down through the bars 15 and 16 respectively.

In accordance with my invention the series of spaced apart trays 14 are held rigid and in assembled relation above and on the truck 10 by unitary uprights at the ends of the truck and transversely central thereof and of the trays. These central supporting units are preferably each in one piece, and also preferably, though not necessarily, pivoted to the truck 10. As shown in Figs. 1 to 5, each end support unit is composed of a channel bar 21 having its lower portion split centrally lengthwise as indicated at 22 with its lower ends bent away from each other symmetrically in diverging relation so that their extremities are spaced apart substantially the width of the truck, where they may be pivoted to the truck as seen at 23 by having pivot pins passed therethrough and through upwardly projecting ears of the truck. For securing the ends, i. e., the cross bars 16 of the trays to these upright supports, I preferably provide metallic clips bent around the channel iron of the upright above and below the cross bar as seen at 24, 24^a, respectively. The ends of these clips adjacent the bar 16 are formed with bent out projections 25, 25^a respectively adapted to fit against the top and bottom of the bar 16 the lower one of these projections being shown as having an upturned extremity 26 to provide a socket for the bottom of the bar. The lower clip 24^a is shown as permanently riveted to the upright 21 as at 27 while the upper clip 24 is removably and adjustably clamped to the upright by a clamp bolt having a wing nut 28 permitting the same to be readily adjusted against the top of the bar 16 and also disengaged for taking down the rack to fold up the same when required. In furtherance of this capability of taking down and folding up the rack the cross bars 16 are secured to the respective clips 24, 24^a by having pins 29 inserted through the projections 25, 25^a and held frictionally or otherwise in holes therefor of the cross bar 16. As shown in Fig. 5 the projections 25, 25^a are preferably relatively long, i. e., extending some little beyond the width of the clips 24, 24^a at either side thereof as indicated at 30. The lowermost tray which comes opposite the forked lower portions of the bars 21, is shown as secured thereto by bolts 24^b which may of course be removable. For supporting and bracing, and also properly spacing apart the series of trays intermediate the length thereof I provide a bracing and spacing device consisting as shown of spaced apart tie rods 31 extending from the bottom of the truck 10 up through intermediate cross bars 32 to the top of the topmost tray. These tie rods have slipped thereon spacing sleeves or tubes 33 each of a length corresponding to the distance from the bottom of one tray to the bottom of the next. The intermediate cross bars 32 have secured to the undersides thereof and at their middle portions metallic clips or plates 34 shown as flanged, these plates being shown as held to the bars by screws 34^a. As shown the lowermost one of the tubes 33 extends from an intermediate bar of the truck 10 up to abut against the plate or clip 34 at the bottom of the lowermost tray. Then the next one of the tubes extends from the top of said plate or clip 34 up through the cross bar and up to the bottom of the next clip 34 to abut thereagainst as seen in Fig. 7. This assemblage is continued to the top of the rack where the topmost cross bar 32^a has fitted therethrough a sleeve or tube 35 formed with and depending from a nut 36 adapted to engage over the top of said cross bar, the tube 35 being threaded on to the top of the tie rod 31 as seen at 37. The tube 35 terminates some little short of the adjacent clip or plate 34 as seen at 38 affording clearance so that upon turning up the nut 36 the entire series of tray cross bars 32 will be rigidly and immovably clamped to the spacing tubes 33 and against the clips 34, thus tying the several trays together, and to the truck strongly and reliably intermediate the length thereof. As seen in Fig. 6 I preferably employ two of the tie rods 31 with their respective series of spacing tubes, these

tie rods being relatively fixed close together, i. e., spaced in a substantial distance from the sides of the trays, so that there are no projecting uprights presenting obstacles or corners either at the ends of the rack or intermediate thereof, this being an important and valuable feature in practice.

As shown in Fig. 8 instead of having the upright end supporting units pivoted to the truck, they may be detachably bolted thereto, so that instead of folding the uprights down on to the truck when the truck is to be taken down, they may be readily detached. For this purpose I show the truck channel iron 10^a with its corner reinforcing brackets 12^a, having a clamp bolt 39 securing the same to the channel iron upright 21^a, with an interposed reinforcing strut 40. According to a further modification as shown in Figs. 9 and 10, instead of having the end upright units of channel iron they may be of wood as seen at 21^b. In this case I may provide a metallic clip in the form of a plate 41 secured by screws or otherwise to the upright 21^b, this having an extended depending portion 42 to insure against torsional twisting and to brace it strongly. This plate clip has its end portions struck out at each side of the upright 21^b as seen at 43 with upturned extremities 44 to constitute sockets into which the cross bars 16^a may be fitted. These cross bars may also be bolted to the uprights by through clamping bolts 45 with nuts 46 projecting outward convenient of access for removal of said bolts to take down the rack.

It is thus to be noted that in the principal form of the invention set forth, and in the modified forms as well, a structure of exceptional rigidity along with maximum simplicity is produced, that is at the same time capable of being most conveniently taken down into a compact space, or set up for use as required. I am aware that the invention may be embodied in other specific forms without departing from the spirit or essential attributes thereof, and I therefore desire the present embodiment to be considered in all respects as illustrative and not restrictive, reference being had to the appended claims, rather than to the foregoing description, to indicate the scope of the invention.

Having described my invention, what I claim as new and desire to secure by Letters Patent is:

1. A shoe rack comprising a portable truck, a series of shoe holding trays, and means for rigidly supporting said trays over said truck in spaced apart relation consisting in metallic upright at each end of said truck extending up transversely central of said trays, having its lower end forked a substantial distance from the bottom, and with the forks spread apart to constitute bracing means, and clips secured to said uprights equipped with means for engaging and rigidly holding the respective trays immovable with respect to said uprights.

2. A shoe rack, comprising a truck base, a series of shoe holding trays, and means for rigidly supporting said trays from said base in spaced apart relation consisting in an upright in each end of said base extending up transversely central of said trays and having its lower end forked to constitute transverse bracing means, the lower ends of said uprights being movably secured to said base, and clips secured to said uprights equipped with means for engaging and rigidly holding the respective trays immovably with respect to said uprights, certain of said clips having provision for up and down adjustment on said uprights to take up for shrinkage and to permit taking down of the rack.

3. A shoe rack comprising a truck, a series of shoe holding trays, and means for rigidly supporting said trays from said truck in spaced apart relation, consisting in channel irons secured to the respective ends of the truck extending up transversely center of said trays, said channel irons formed to be self-bracing at the lower ends thereof with respect to said truck without separate bracing means, and having clips engaged therewith for securing the same rigidly with respect to said trays.

4. A shoe rack comprising a truck, a series of shoe holding trays, and means of supporting said trays from said truck in spaced apart relation consisting in channel irons fixed to the respective ends of the truck, and extending up transversely central of said trays, and means of securing the ends of said trays and said channel irons, the lower portion of said channel irons being forked and spread apart a substantial distance from the bottom thereof engaged with the respective sides of the truck to brace the same transversely.

5. A shoe rack, comprising a truck base, a series of shoe holding trays, and means for rigidly supporting said trays from said base and in spaced apart relation consisting in upright channel irons secured to said base and extending up transversely central of said trays, metallic clips fitted around said channel irons and detachably secured thereto, each of said clips having a transversely extending projection, and means for securing said projections of said clips to end portions of said trays.

6. A shoe rack, comprising a truck, a series of shoe holding trays having frames of wood, means for supporting said trays from said truck at the ends thereof, and means for bracing and spacing intermediate portions of said trays consisting in spaced apart

metallic rods extending from top to bottom of the rack with tubes fitted on said rods, each of said tubes extending from the bottom of one tray to the bottom of the next adjacent tray, and fitted through a bar thereof, said bar having a metallic plate fitted to its underside against which the ends of adjacent tubes abut, and means engaged with said rod for clamping said tubes and said trays in rigidly assembled relation with said truck.

7. A shoe rack, comprising a truck, a series of shoe holding trays of wood, means for supporting said trays from said truck at the ends thereof, and means for bracing and spacing intermediate portions of said trays consisting in a metallic rod extending from top to bottom of the rack both longitudinally and transversely intermediate thereof, said rod extending through cross bars of said trays, tubes fitted to extend from the bottom of one tray to the bottom of the next and fitted through said cross bar, a metallic member applied to the bottom of each cross bar against which the ends of said tubes abut, and means engaged with said rod for adjustably clamping said tubes and said trays in rigidly assembled relation with said truck.

8. A shoe rack, comprising a truck, a series of shoe holding trays of wood, means for supporting said trays from said truck at the ends thereof, and means for bracing and spacing intermediate portions of said trays consisting in a metallic rod extending from top to bottom of the rack both longitudinally and transversely intermediate thereof, said rod extending through cross bars of said trays, tubes fitted on said rod each extending from the bottom of one tray to the bottom of the next and fitted through said cross bar, a metallic member applied to the bottom of each cross bar against which the ends of said tubes abut, and means engaged with said rod for adjustably clamping said tubes and said trays in rigidly assembled relation with said truck, said means composed of a nut engaged with the top of said rod and having a depending tube formed therewith and fitted down through the cross bar of the top one of said trays.

9. A shoe rack comprising a truck, a series of shoe holding trays, and means for rigidly supporting said trays from said truck in spaced apart relation consisting of vertical standards at each end of said truck extending up transversely at the center of the ends of said trays, having their lower ends bifurcated a substantial distance from the bottoms thereof and spread apart to constitute transverse bracing means, the lower ends of said standards being movably secured to said truck, and clips secured to said truck to engage said standards by pivot means, said trays being cross-treed on said standards and the spacing between said trays at their outer corners being free and unobstructed.

10. A channel iron truck for shoe racks and the like formed of two side rails and two end rails, the open side of the channel iron facing inward, said end rails being a continuation of said side rails, the upper and lower webs of the channel iron being cut away and mitered permitting the center web to bend at right angles, with reinforcing means at the corners thus formed, the extremities of the channel iron abutting and secured together adjacent the center of an end of a truck.

11. A shoe rack comprising a truck base, uprights extending from the ends thereof, and shoe holding trays secured to said uprights, each of said trays having side and end bars secured together by mortise and tenon or like joints, the ends of said bars adjacent and at the junctions thereof being slotted and having fixed in each of said slots a locking plate member with the ends thereof turned, one upward and the other downward and adapted to engage and fit against the side and end bars respectively.

12. A shoe rack comprising a truck, a series of shoe holding trays, and means for rigidly supporting said trays from said truck in spaced apart relation consisting in an upright in each end of said truck extending up transversely central of said trays and having its lower ends forked to constitute transverse bracing means, the lower ends of said uprights being secured to said truck, said uprights being provided with a plurality of clips fixed thereto in pairs, the upper clips of said pairs having an up and down movement for the reception therebetween of the ends of said trays, said clips being provided with bolts or pins which pass vertically through the end of said trays and through said clips, thus clamping the same in rigid relation with the standards.

In testimony whereof, I have signed my name to this specification.

JOHN S. CANTELO.