(12) INTERNATIONAL APPLICATION PUBLISHED UNDER THE PATENT COOPERATION TREATY (PCT)

(19) World Intellectual Property Organization
International Bureau

(43) International Publication Date
12 September 2019 (12.09.2019)

WIPO | PCT

(10) International Publication Number
WO 2019/170369 A1

(51) International Patent Classification:
F04B 1/04 (2006.01) *F04B 11/00* (2006.01)
F02M 63/02 (2006.01) *F04B 23/04* (2006.01)
F04B 1/047 (2006.01) *F04B 53/16* (2006.01)
F04B 1/053 (2006.01)

(21) International Application Number:
PCT/EP2019/053267

(22) International Filing Date:
11 February 2019 (11.02.2019)

(25) Filing Language: English

(26) Publication Language: English

(30) Priority Data:
102018000003340 07 March 2018 (07.03.2018) IT

(71) Applicant: **ROBERT BOSCH GMBH** [DE/DE]; Postfach 30 02 20, 70442 Stuttgart (DE).

(72) Inventors: **MARZILIANO, Giuseppe**; Piazza San Giovanni Bosco n..12, 70020 Bitetto (BA) (IT). **GUARINO, Rocco**; Strada Noci 1 trv simistra 17, 70010 Turi (IT).

(81) Designated States *(unless otherwise indicated, for every kind of national protection available)*: AE, AG, AL, AM, AO, AT, AU, AZ, BA, BB, BG, BH, BN, BR, BW, BY, BZ, CA, CH, CL, CN, CO, CR, CU, CZ, DE, DJ, DK, DM, DO, DZ, EC, EE, EG, ES, FI, GB, GD, GE, GH, GM, GT, HN, HR, HU, ID, IL, IN, IR, IS, JO, JP, KE, KG, KH, KN, KP, KR, KW, KZ, LA, LC, LK, LR, LS, LU, LY, MA, MD, ME, MG, MK, MN, MW, MX, MY, MZ, NA, NG, NI, NO, NZ, OM, PA, PE, PG, PH, PL, PT, QA, RO, RS, RU, RW, SA, SC, SD, SE, SG, SK, SL, SM, ST, SV, SY, TH, TJ, TM, TN, TR, TT, TZ, UA, UG, US, UZ, VC, VN, ZA, ZM, ZW.

(84) Designated States *(unless otherwise indicated, for every kind of regional protection available)*: ARIPO (BW, GH, GM, KE, LR, LS, MW, MZ, NA, RW, SD, SL, ST, SZ, TZ, UG, ZM, ZW), Eurasian (AM, AZ, BY, KG, KZ, RU, TJ, TM), European (AL, AT, BE, BG, CH, CY, CZ, DE, DK, EE, ES, FI, FR, GB, GR, HR, HU, IE, IS, IT, LT, LU, LV, MC, MK, MT, NL, NO, PL, PT, RO, RS, SE, SI, SK, SM, TR), OAPI (BF, BJ, CF, CG, CI, CM, GA, GN, GQ, GW, KM, ML, MR, NE, SN, TD, TG).

(54) Title: PUMPING UNIT FOR FEEDING FUEL, PREFERABLY DIESEL FUEL, TO AN INTERNAL COMBUSTION ENGINE

FIG. 1

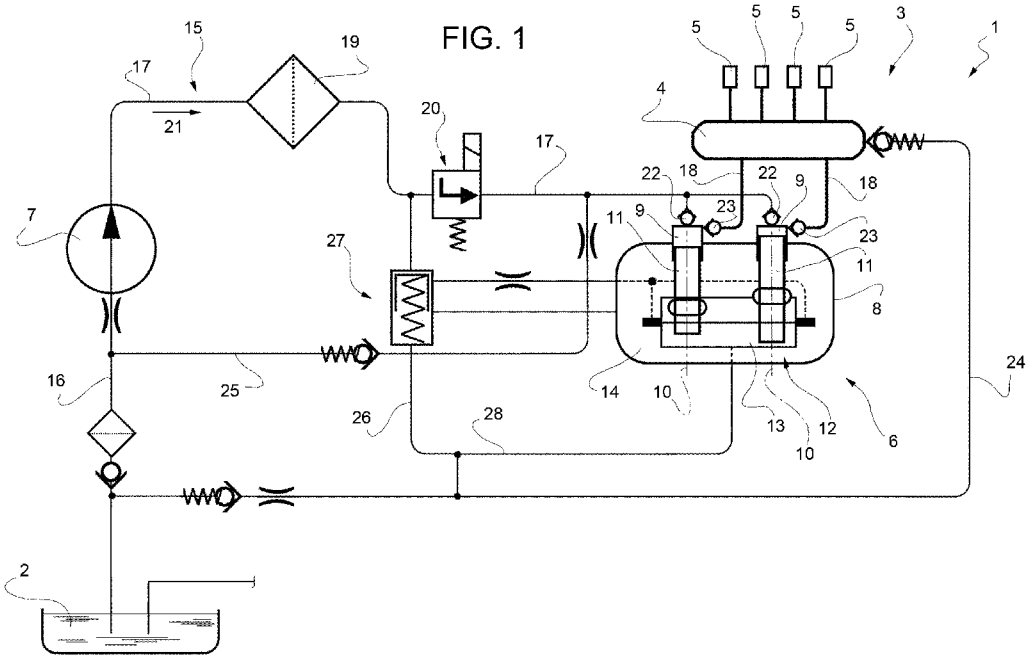

(57) Abstract: A pumping unit for feeding fuel, preferably diesel fuel, to an internal combustion engine (3) is provided with a high-pressure pump (6) having at least two cylinders (9), with a feed header (29) for feeding the fuel to the high-pressure pump (6), with an intake duct (30) for connecting the feed header (29) to each cylinder (9), and with a flow separator (31) inserted into the feed header (29) for dividing the fuel supplied by a pre-feed pump (7) into two fuel flows each advanced along an associated intake duct (30).

WO 2019/170369 A1

[Continued on next page]

Published:
— *with international search report (Art. 21(3))*

Description

Title

PUMPING UNIT FOR FEEDING FUEL, PREFERABLY DIESEL FUEL, TO AN INTERNAL COMBUSTION ENGINE

The present invention relates to a pumping unit for feeding fuel, preferably diesel fuel, to an internal combustion engine.

In particular the present invention relates to a pumping unit of the type comprising a high-pressure pump, for example a piston pump, designed to feed the fuel to an internal combustion engine; a pre-feed pump, for example a gear pump, designed to feed the fuel from a storage tank to the piston pump; and a hydraulic circuit for connecting together the storage tank and the internal combustion engine.

The piston pump comprises a pump body; at least two cylinders formed in the pump body and slidably engaged by respective pistons; and an actuating device for displacing the pistons along the associated cylinders with a reciprocating rectilinear movement comprising an intake stroke for drawing the fuel into the cylinders and a delivery stroke for supplying the fuel to the internal combustion engine.

The two cylinders have respective longitudinal axes which are parallel to each other and are each associated with a respective intake valve for drawing the fuel into the cylinder and with a respective delivery valve for supplying the fuel to the internal combustion engine.

The actuating device is configured so as to displace simultaneously a piston with its intake stroke and the other piston with its delivery stroke.

The hydraulic circuit comprises a first line for connecting together the storage tank and the gear pump; a second line for connecting together the gear pump and the piston pump; and a third line for connecting together the piston pump and the internal combustion engine.

The second line comprises a feed header and, for each cylinder, a respective intake duct for connecting the feed header to the said cylinder.

Generally, the hydraulic circuit further comprises a metering electrovalve arranged along the second line for selectively controlling the instantaneous flow of fuel fed to the piston pump depending on the values of a plurality of operating parameters of the internal combustion engine.

The known pumping units of the type described above have a number of drawbacks mainly resulting from the fact that the pressure waves generated in each intake duct by closing of the associated intake valve advance, via the feed header, along the other intake duct and may compromise the correct opening of the associated intake valve, and therefore the correct filling of the associated cylinder.

The object of the present invention is to provide a pumping unit for feeding fuel, preferably diesel fuel, to an internal combustion engine, which does not have the aforementioned drawbacks and which is simple and inexpensive to produce.

According to the present invention a pumping unit for feeding fuel, preferably diesel fuel, to an internal combustion engine is provided, as claimed in the accompanying claims.

The present invention will now be described with reference to the accompanying drawings which illustrate a non-limiting example of embodiment thereof, in which:

Figure 1 is a hydraulic diagram of a preferred embodiment of the pumping unit according to the present invention;

Figure 2 is a schematic perspective view, with parts cross-sectioned, of a detail of the pumping unit of Figure 1; and

Figure 3 is a perspective view of a detail of Figure 2.

With reference to Figure 1, 1 denotes in its entirety a pumping unit for feeding a fuel, preferably diesel fuel, from a storage tank 2 to an internal combustion engine 3, in the case in question a diesel combustion engine.

The engine 3 comprises a header 4 for distribution of the fuel, commonly known by the term "common rail", and a plurality of injectors 5 connected to the header 4 and designed to atomize the fuel inside associated combustion chambers (not shown) of the said engine 3.

The pumping unit 1 comprises a high-pressure pump 6, namely a piston pump, for feeding the fuel to the engine 3; and a low-pressure or pre-feed pump 7, namely a gear pump, which is for example electrically operated, for feeding the fuel from the tank 2 to the pump 6.

The pump 6 comprises a pump body 8 and, in this case, two cylinders 9, which are formed in the pump body 8 and have respective longitudinal axes 10 substantially parallel to each other.

The cylinders 9 are slidably engaged by respective pistons 11 movable, under the thrust of an actuating device 12, with an alternating rectilinear movement comprising an intake stroke for drawing the fuel inside the associated cylinders 9 and a delivery stroke for supplying the fuel to the engine 3.

The device 12 comprises a cam transmission shaft 13 which is housed inside a first containing chamber 14 formed in the pump body 8 and is designed to displace the pistons 11 with their delivery stroke.

The device 12 also comprises, for each piston 11, a respective spring (not shown) which is housed inside a second containing chamber (not shown) formed in the pump body 8 and is designed to displace said piston 11 with its intake stroke.

In connection with the above description it should be pointed out that the shaft 13 is configured so as to allow the pistons 11 to be displaced simultaneously, one with its intake stroke and the other with its delivery stroke.

The pumping unit 1 also comprises a hydraulic circuit 15 comprising, in turn, a first line 16 for connecting together the tank 2 and the pump 7; a second line 17 for connecting together the pump 7 and the pump 6; and a third line 18 for connecting together the pump 6 and the header 4.

The line 17 is provided with a filtering device 19 for filtering the fuel fed to the cylinders 9 and also has a metering electrovalve 20, mounted downstream of the device 19 in a direction 21 of flow of the fuel along the line 17, for selectively controlling the instantaneous flowrate of the fuel fed to the pump 6 depending on the values of a plurality of operating parameters of the engine 3.

The line 17 and the line 18 are connected to each cylinder 9 by means of an intake valve 22 and a delivery valve 23, respectively.

The circuit 15 also comprises a fourth line 24, which extends between the header 4 and the line 16 and allows the fuel flow which exceeds that needed for the injectors 5 to be discharged into the line 16; and a fifth line 25 which extends between the line 17 and the line 16 and is connected to the line 17 downstream of the electrovalve 20 in the direction 21 for feeding to the inlet of the pump 7 the fuel seeping through the electrovalve 20 when the said electrovalve 20 is closed.

The circuit 15 also has a sixth line 26 which extends between the line 17 and the line 24, is connected to the line 17 upstream of the electrovalve 20 in the direction 21 and is provided with a valve device 27.

The device 27 is configured to control the supply into the pump body 8 and into the containing chamber 14 of the fuel flow used to lubricate the cam transmission shaft 13 and the fuel flow in excess of that fed through the electrovalve 20.

The circuit 15 comprises, finally, a seventh line 28 for feeding into the line 26 and therefore into the tank 2 the fuel seeping through the pump body 8.

In accordance with that shown in Figures 2 and 3, the line 17 comprises a feed header 29 and, for each cylinder 9, a respective intake duct 30 for connecting the header 29 to said cylinder 9.

Internally, the header 29 houses a flow separator 31 designed to divide the fuel supplied by the pump 7 into two fuel flows, each of which is advanced along an associated duct 30 to the associated intake valve 22.

The separator 31 is mounted downstream of the electrovalve 20 in the direction 21, and comprises a separator element 32, which has the form of a flat plate and is designed to divide the header 29 into two separate feed channels 33 each connected to an associated duct 30.

The separator 31 also comprises a coupling element 34, which has the form of a cylindrical hub, is integral with the element 32, and is slidably engaged in the header 29.

Since the ducts 30 are arranged in succession along the header 29, the element 34 is mounted between the two ducts 30, is configured in such a way as to axially close one of the channels 33 and divert the fuel into the associated duct 30, and also has an opening 35 designed to allow the fuel fed along the other channel 33 to advance through the separator 31 and into the associated duct 30.

Since the pressure waves generated by the closing of each intake valve 22 advance along the associated intake duct 30 and the associated feed channel 33 without reaching the intake duct 30 of the other intake valve 22, the pumping unit 1 has a number of advantages mainly resulting from the fact that the flow

separator 31 allows each intake valve 22 to operate independently of the other intake valve 22, and therefore ensures correct filling of the cylinders 9.

5

Claims

1. Pumping unit for feeding fuel, preferably diesel fuel, to the internal combustion engine (3), the pumping unit comprising a high-pressure pump (6) for feeding the fuel to an internal combustion engine (3); a pre-feed pump (7) for feeding the fuel from a storage tank (2) to the high-pressure pump (6); and a hydraulic circuit (15) comprising a first line (16) for connecting together the storage tank (2) and the pre-feed pump (7), a second line (17) for connecting together the pre-feed pump (7) and the high-pressure pump (6), and a third line (18) for connecting together the high-pressure pump (6) and the internal combustion engine (3); the high-pressure pump (6) comprising at least two cylinders (9) slidably engaged by respective pistons (11), and an actuating device (12) for displacing the pistons (11) along the said cylinders (9) with a reciprocating rectilinear movement; the second line (17) comprising a feed header (29) and, for each cylinder (9), a respective intake duct (30) for connecting together the feed header (29) and the said cylinder (9); and being characterized in that the hydraulic circuit (15) further comprises a flow separator (31) inserted into the feed header (29) for dividing the fuel supplied by the pre-feed pump (7) into two fuel flows each advanced along an associated intake duct (30).

2. Pumping unit according to Claim 1, wherein the flow separator (31) comprises a separator element (32) inserted into the feed header (29) for dividing the feed header (29) into two separate feed channels (33), and a coupling element (34) integral with the separator element (32) and slidably engaged in said feed header (29).

3. Pumping unit according to Claim 2, wherein the intake ducts (30) are arranged in succession along the feed header (29); the coupling element (34) being mounted between the two intake ducts (30).

4. Pumping unit according to Claim 2 or 3, wherein the coupling element (34) is configured in such a way as to axially close one of the feed channels (33), and has an opening (35) for the other feed channel (33).

5. Pumping unit according to any one of Claims 2 to 4, wherein the separator element (32) has the form of a flat plate and the coupling element (34) has the form of a cylindrical hub.

6. Pumping unit according to any one of the preceding claims, wherein the second line (17) is also provided with a metering electrovalve (20) displaceable between an open position and a closed position of the second line (17); the flow separator (31) being mounted downstream of the metering electrovalve (20) in an advancing direction (21) of the fuel along said second line (17).

7. Pumping unit according to any one of the preceding claims, wherein the cylinders (9) have respective longitudinal axes (10) parallel to each other.

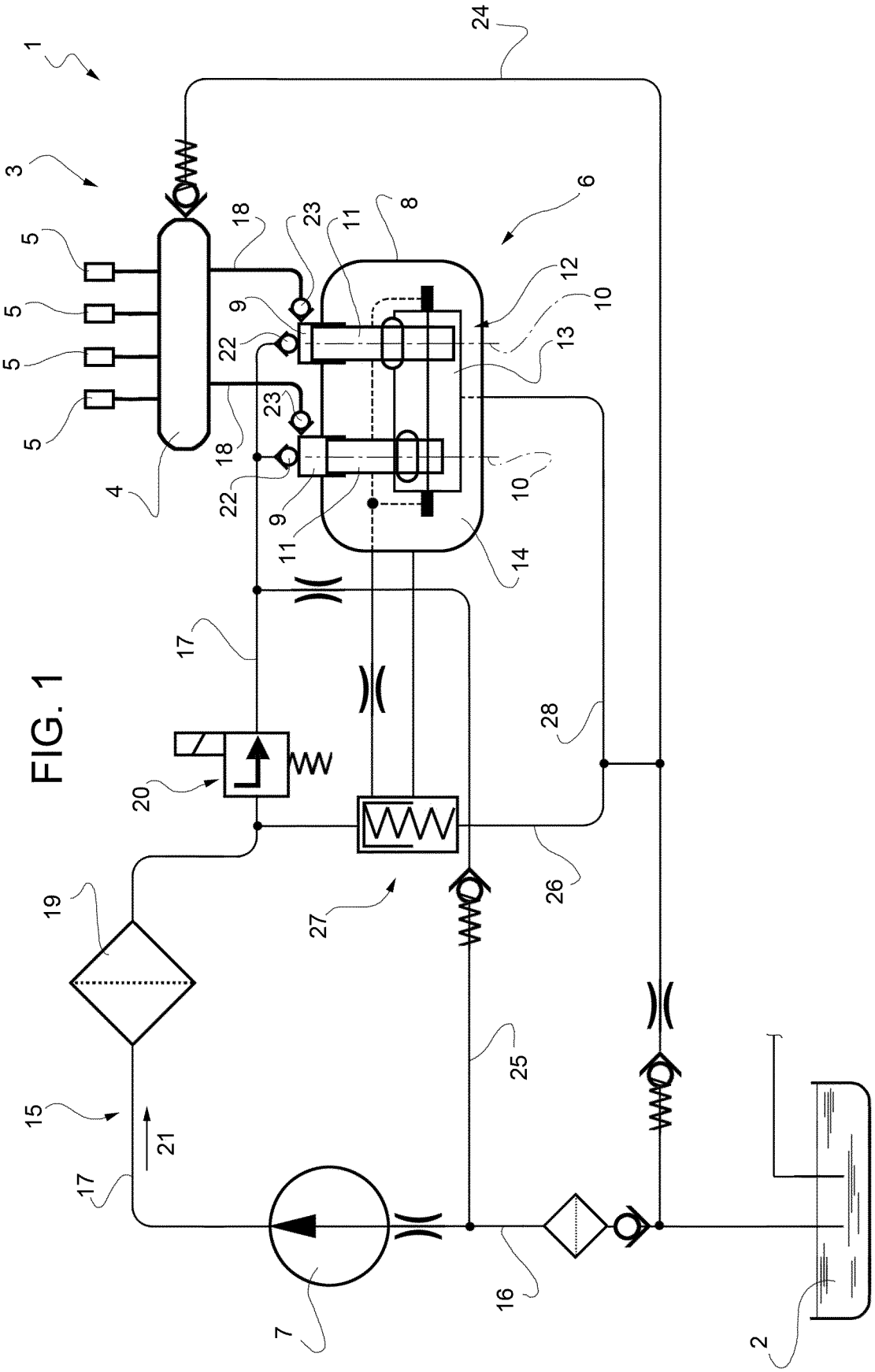

FIG. 1

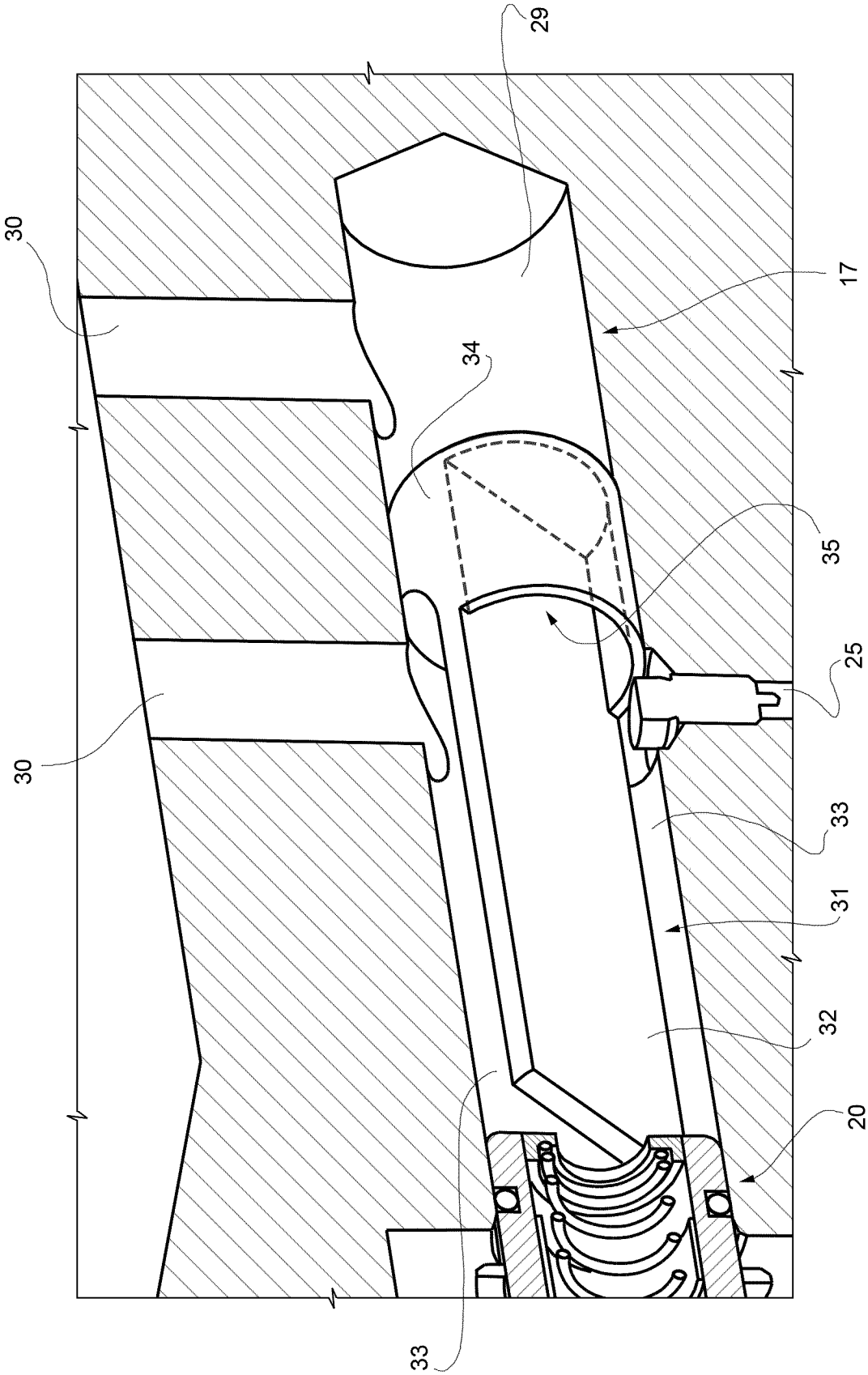

FIG. 2

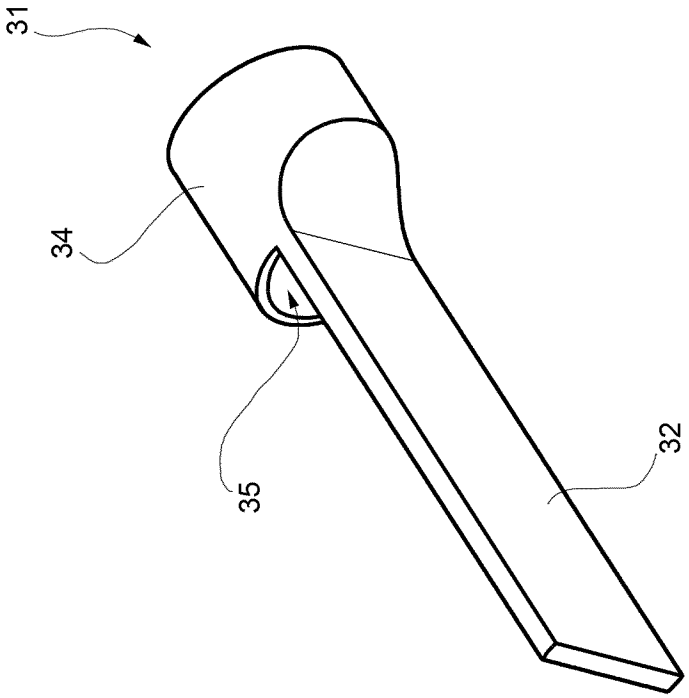

FIG. 3

INTERNATIONAL SEARCH REPORT

International application No
PCT/EP2019/053267

A. CLASSIFICATION OF SUBJECT MATTER

INV. F04B1/04 F02M63/02 F04B1/047 F04B1/053 F04B11/00
F04B23/04 F04B53/16
ADD.

According to International Patent Classification (IPC) or to both national classification and IPC

B. FIELDS SEARCHED

Minimum documentation searched (classification system followed by classification symbols)

F04B F02M

Documentation searched other than minimum documentation to the extent that such documents are included in the fields searched

Electronic data base consulted during the international search (name of data base and, where practicable, search terms used)

EPO-Internal, WPI Data

C. DOCUMENTS CONSIDERED TO BE RELEVANT

Category*	Citation of document, with indication, where appropriate, of the relevant passages	Relevant to claim No.
X	EP 1 522 726 A2 (DENSO CORP [JP]) 13 April 2005 (2005-04-13) paragraphs [0014] - [0038]; figure 1 -----	1
X A	US 5 701 873 A (SCHNEIDER WOLFGANG [CH]) 30 December 1997 (1997-12-30) column 10, line 35 - column 11, line 37; figure 3 -----	1-3,5-7 4
X	US 5 769 611 A (DJORDJEVIC ILIJA [US]) 23 June 1998 (1998-06-23) column 4, line 14 - column 8, line 61; figures 1-8 -----	1

☐ Further documents are listed in the continuation of Box C.

☒ See patent family annex.

* Special categories of cited documents :

"A" document defining the general state of the art which is not considered to be of particular relevance

"E" earlier application or patent but published on or after the international filing date

"L" document which may throw doubts on priority claim(s) or which is cited to establish the publication date of another citation or other special reason (as specified)

"O" document referring to an oral disclosure, use, exhibition or other means

"P" document published prior to the international filing date but later than the priority date claimed

"T" later document published after the international filing date or priority date and not in conflict with the application but cited to understand the principle or theory underlying the invention

"X" document of particular relevance; the claimed invention cannot be considered novel or cannot be considered to involve an inventive step when the document is taken alone

"Y" document of particular relevance; the claimed invention cannot be considered to involve an inventive step when the document is combined with one or more other such documents, such combination being obvious to a person skilled in the art

"&" document member of the same patent family

Date of the actual completion of the international search	Date of mailing of the international search report
4 April 2019	24/04/2019

Name and mailing address of the ISA/	Authorized officer
European Patent Office, P.B. 5818 Patentlaan 2 NL - 2280 HV Rijswijk Tel. (+31-70) 340-2040, Fax: (+31-70) 340-3016	Jurado Orenes, A

INTERNATIONAL SEARCH REPORT

Information on patent family members

International application No
PCT/EP2019/053267

Patent document cited in search report		Publication date	Patent family member(s)			Publication date
EP 1522726	A2	13-04-2005	CN	1605748	A	13-04-2005
			EP	1522726	A2	13-04-2005
			JP	4052220	B2	27-02-2008
			JP	2005113807	A	28-04-2005
			US	2005076888	A1	14-04-2005
US 5701873	A	30-12-1997	AT	169720	T	15-08-1998
			CA	2151518	A1	08-12-1996
			CN	1116441	A	07-02-1996
			DE	59406680	D1	17-09-1998
			EP	0678166	A1	25-10-1995
			ES	2120076	T3	16-10-1998
			JP	3747061	B2	22-02-2006
			JP	H08505680	A	18-06-1996
			US	5701873	A	30-12-1997
			WO	9513474	A1	18-05-1995
US 5769611	A	23-06-1998	NONE			