Sept. 29, 1959 A. R. CLARK 2,906,088

APPARATUS FOR STARTING DIESEL ENGINES AT LOW TEMPERATURES

Filed Oct. 7, 1957 2 Sheets-Sheet 1

Fig. 1

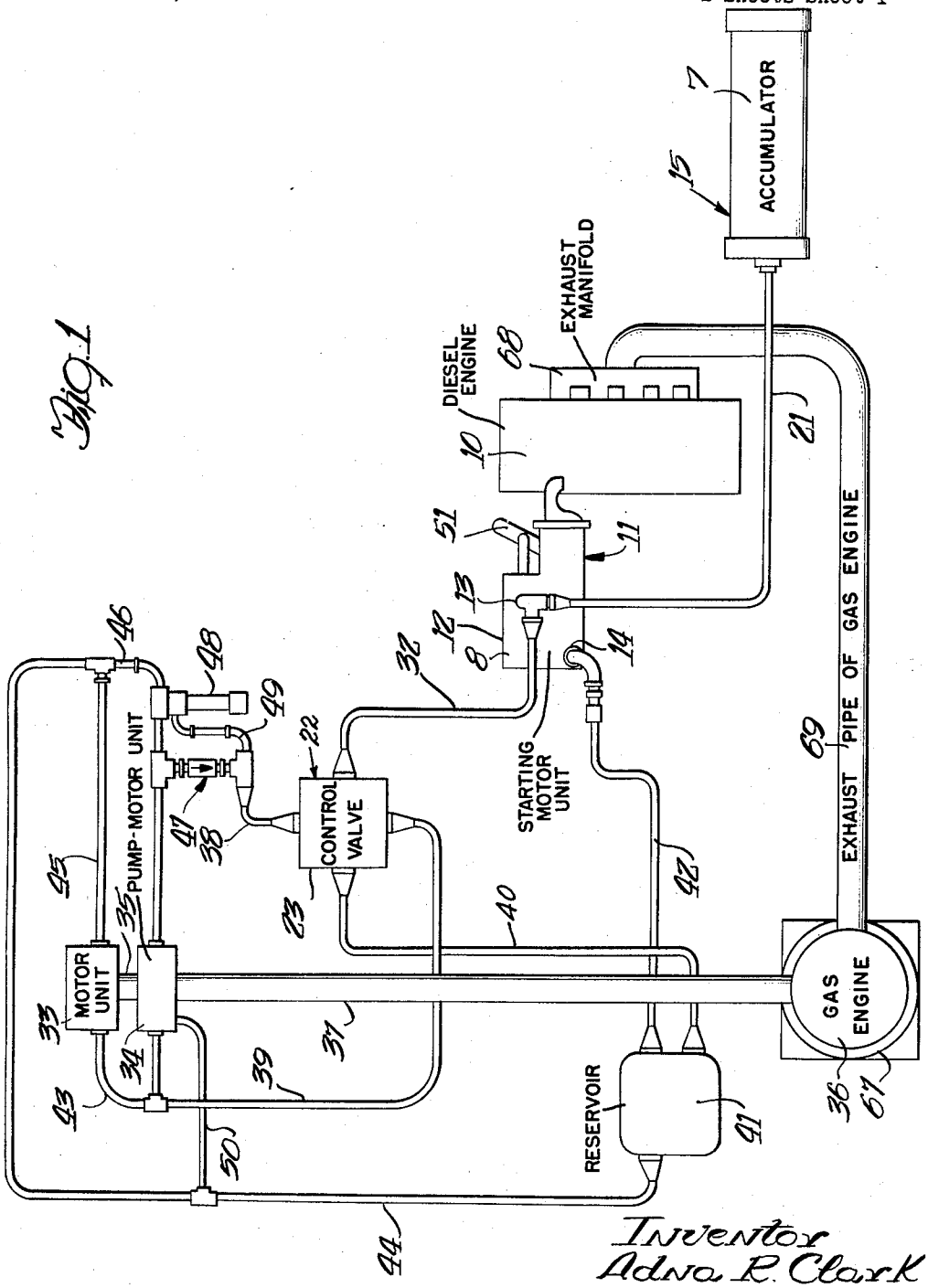

Inventor
Adna R. Clark
Paul O. Pippel
Attorney

Sept. 29, 1959 A. R. CLARK 2,906,088

APPARATUS FOR STARTING DIESEL ENGINES AT LOW TEMPERATURES

Filed Oct. 7, 1957 2 Sheets-Sheet 2

Fig. 2.

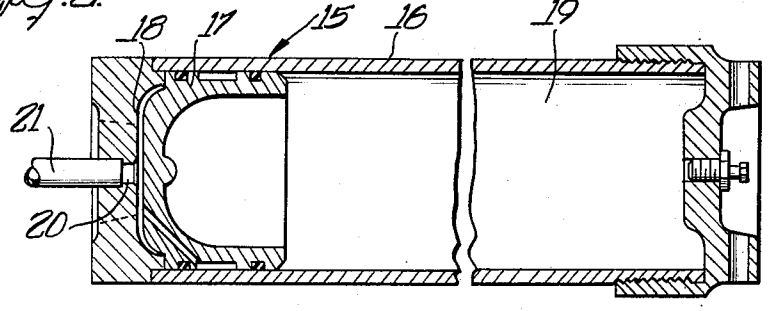

Fig. 3.

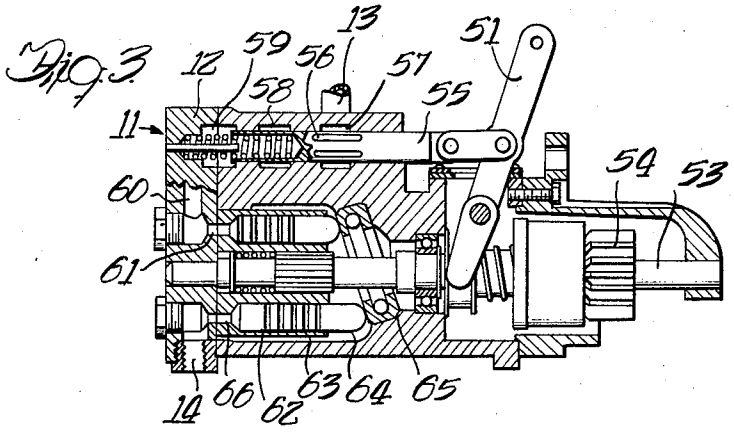

Fig. 4.

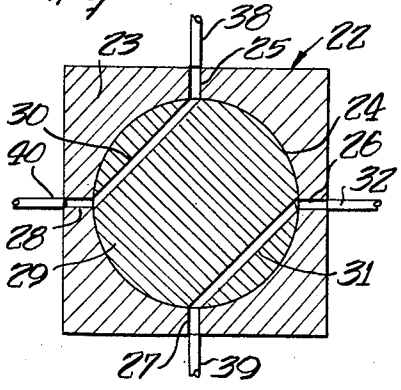

Fig. 5.

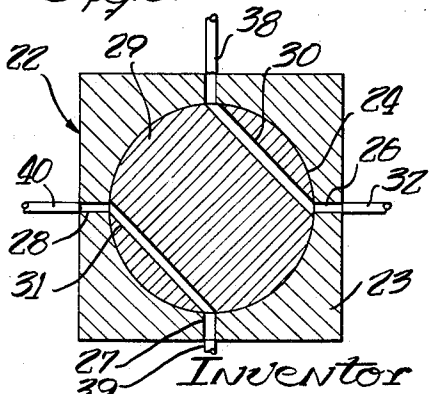

INVENTOR
Adna R. Clark
Paul O. Pippel
Attorney

United States Patent Office 2,906,088 Patented Sept. 29, 1959

2,906,088

APPARATUS FOR STARTING DIESEL ENGINES AT LOW TEMPERATURES

Adna R. Clark, Clarendon Hills, Ill., assignor to International Harvester Company, Chicago, Ill., a corporation of New Jersey

Application October 7, 1957, Serial No. 688,614

5 Claims. (Cl. 60—17)

This invention relates to apparatus for starting diesel engines at low temperatures.

An object of the invention is to provide apparatus for fast cranking a diesel engine at low temperatures so that it may be started.

Another object of the invention is to provide a spark ignition engine in apparatus for starting a diesel engine at a low temperature that is low in horsepower and can be cranked at a high speed.

The foregoing and other objects of the invention will be apparent from the construction and arrangement illustrated in the accompanying drawings wherein:

Figure 1 is a schematic view of the apparatus for starting the diesel engine;

Figure 2 is a longitudinal sectional view through the accumulator of the apparatus;

Figure 3 is a longitudinal sectional view through the fluid motor of the apparatus;

Figure 4 is a view showing one position of the reversing valve of the apparatus, and

Figure 5 is a view showing another position of the reversing valve of the apparatus.

In the past several different means have been devised to start diesel engines at low temperatures. One manufacturer directly connects a gasoline engine to the diesel engine to start the diesel engine. The gasoline engine is from 16 to 18 horsepower and a torch is used to warm it up and then it is hand cranked in order to get it started. After the gasoline engine is started it then starts the diesel engine. Another manufacturer uses an engine pump and a fluid motor and a hand pump and an accumulator to start the diesel engine. Before going into a cold climate the diesel engine drives the engine driven pump to build up the pressure in the accumulator. The accumulator is used to crank the diesel engine. After using the accumulator to crank the diesel engine for the first time the hand pump must be used to build up the pressure in the accumulator and it takes about 30 minutes to build up the pressure in the accumulator. Then the accumulator can be used to crank the diesel engine a second time and this recharging of the accumulator and cranking of the diesel engine is repeated until the diesel engine is started. If the diesel engine fails to start after cranking it the first time then after recharging the accumulator the diesel engine will be as cold as before it was cranked the first time. At a temperature as low as —40° F. this apparatus is not practical and at a temperature as low as —65° F. the apparatus can turn over the diesel engine at starting speed but the cranking period is so short there is not enough heat developed in the cylinder for combustion. Another manufacturer operated the diesel on gasoline until it warmed up and then switched over to diesel operation. This means was too high in cost.

The invention proposes an apparatus for starting diesel engines at a temperature as low as —65° F. The apparatus is comprised of a reservoir containing fluid, a pump, a gasoline engine connected to the pump, a fluid motor and an accumulator. First, the accumulator is used to start the gasoline engine and then the gasoline engine slow cranks the diesel engine. Third, the gasoline engine builds up pressure in an accumulator and then the pressure in the accumulator is used to fast crank the diesel engine resulting in starting of the diesel engine. The apparatus has the advantages that there is fast cranking of the diesel engine and the gasoline engine is small and can be cranked at a high speed. This apparatus has the following advantages over the apparatus of the first named manufacturer. The gasoline engine is of only 3 to 6 horsepower and is started without a torch and can be cranked at a higher speed than the gasoline engine of the first manufacturer, and can be mounted in a variety of locations while the gasoline engine of the first named manufacturer has a fixed location with respect to the diesel engine. The apparatus of the present invention gives a higher speed of cranking of the diesel engine than the apparatus of the first named manufacturer. The apparatus of the second named manufacturer does not have a gasoline engine so there is no means of slow cranking the diesel engine for a period of time to warm it up as in applicant's apparatus.

In the drawings, 10 designates a diesel engine which is to be started in a climate where the temperature gets as low as —65° F. The invention is concerned with apparatus for starting the diesel engine 10 at temperatures as low as —65° F. The apparatus is comprised of a hydraulic engine-starting motor unit 11 operatively connected to the crankshaft of the diesel engine 10 and this starting motor unit includes a housing 12 having an inlet 13 and an outlet 14. A rechargeable energy storage unit in the form of a hydraulic accumulator 15 is provided and includes a cylindrical housing 16 and a free piston 17 slidably mounted in the housing dividing the housing into chambers 18 and 19. The chamber 19 contains nitrogen gas under pressure, an illustrative pressure being 1500 p.s.i. The chamber 18 contains oil under a predetermined pressure, an illustrative pressure being 3000 p.s.i. The housing 16 has an outlet 20 from the chamber 18 and a conduit 21 is in communication with the outlet and the inlet 13 of the starting motor unit 11. A control valve 22 includes a housing 23 square in cross section and having a chamber 24 and four ports 25, 26, 27 and 28 in communication with the chamber and an element 29 rotatably mounted in the chamber and having a pair of channels 30 and 31. A conduit 32 is in communication with the inlet 13 of the motor unit 11 and the conduit 21 and is also in communication with port 26 of the control valve 22. A hydraulic motor unit 33 and a hydraulic pump motor unit 34 are connected together by a shaft 35. These units 33 and 34 are of the gear species and the unit 33 has greater capacity than the unit 34. The pump-motor unit when driven as a pump and when connected with the energy storage unit 15, as will be explained later, is operable to supply power to such storage unit to recharge the same. A small spark ignition or gasoline engine 36 is connected to the pump-motor unit 34 by a shaft 37. A conduit 38 is in communication with port 25 of the control valve 22 and is also in communication with the outlet side of the pump-motor unit 34. A conduit 39 is in communication with port 27 of reversing valve 22 and is also in communication with the inlet side of pump-motor unit 34. A conduit 40 is in communication with port 28 of control valve 22 and is also in communication with a reservoir 41 containing oil. A conduit 42 is in communication wth the reservoir 41 and is also in communication with the outlet 14 of the starter motor unit 11. A conduit 43 is in communication with the conduit 39 and is also in communication with the gear motor unit 33. A conduit 44 is in communication with the reservoir 41 and is also in communication with a conduit 45 which is in communication with the outlet side of motor unit 33. A con-

duit 46 is in communication with the conduits 44 and 45 and is also in communication with the conduit 38. A check valve 47 is disposed in the conduit 38 and prevents flow of oil from port 25 of control valve 22 to the pump-motor unit 34 and conduit 46. An unloading valve 48 is disposed in the conduit 46 and a feeler conduit 49 is in communication with the conduit 38 and the unloading valve. A conduit 50 is in communication with the conduit 44 and is also in communication with the pump-motor unit 34.

The diesel engine 10 is started as follows: First the accumulator 15 is used to start the gasoline engine 36. This is done by moving the control valve 22 to the position shown in Figure 4. This results in oil from the accumulator 15 moving through conduit 21 and bypassing the starting motor unit 11 and then flowing through conduit 32 into port 26 of the control valve through channel 31 and out port 27 into conduit 39 to pump-motor unit 34 and into conduit 43 to motor unit 33. This causes units 33 and 34 to be driven causing rotation of shafts 35 and 37 thus cranking the gasoline engine 36 at a high r.p.m. Therefore, each of the units 33 and 34 is an engine cranking unit. After the oil passes through the unit 33 it flows through conduits 45 and 44 into reservoir 41. After the oil passes through unit 34 it moves into conduit 38 past check valve 47 into port 25 of the control valve through channel 30 and out port 28 into conduit 40 and then into reservoir 41. The result is that the units 33 and 34 will cause the gasoline engine 36 to be started. Second, the gasoline engine 36 does slow cranking of the diesel engine 10. This is done by moving control valve 22 to the position shown in Figure 5 and grasping lever 51 and swinging it about its fixed pivot 52 causing the member 53 to be moved to the right as shown in Figure 3 resulting in gear 54 engaging a gear on the crankshaft of the diesel engine 10. This movement of lever 51 also causes tube 55 to be moved to the left as shown in Figure 3 so that slots 56 in the tube are in communication with both chambers 57 and 58 and chamber 57 is in communication with inlet 13 of the fluid motor 11. This movement of lever 51 causes chamber 58 to be in communication with chamber 59 through slots 56 and the hollow of the tube. The chamber 59 is in communication with the chamber 60. The gasoline engine 36 drives the unit 34 to operate as a pump so that oil flows from reservoir 41 through conduit 40 into port 28 through channel 31 and out port 27 through conduit 39 through the unit 34 and through conduit 38 into port 25 through channel 30 and out port 26 of the control valve through conduit 32 into the inlet 13 of the fluid motor 11. From the inlet 13 the oil flows through chamber 57 and slots 56 of the tube into chamber 58 and through a passage not shown into chamber 59 and then into chamber 60 through aperture 61 into the respective chamber 62 of a collar 63 splined on the member 53. The oil pressure in the chamber 62 causes the piston 64 slidably mounted therein to move outwardly of the collar 63. Since the piston 64 is in engagement with the bearing 65 which is disposed at an angle in the housing 12 and fixed in the housing the piston will seek a position so that it can move outwardly of the collar 63 and this position will be around the bearing causing rotation of member 53. When the respective piston 64 has reached the lower position shown in Figure 3 the chamber 62 comes into communication with an aperture 66 so that the oil can escape through the aperture and flow out the outlet 14 through conduit 42 to the reservoir 41. The rotation of the member 53 causes slow cranking of the diesel engine 10. The cylinder of the gasoline engine 36 is surrounded by a cowling 67 and the heat from the gasoline engine 36 flows through pipe 69 to the manifold 68 of the diesel engine.

The third step is that after the gasoline engine 36 is running it then builds up pressure in the accumulator 15 and heat from the gasoline engine continues to flow into the manifold 68 of the diesel engine. This is accomplished as follows: The lever 51 is swung clockwise as shown in Figure 3 so that oil flow through the fluid motor 11 is closed off. The gasoline engine 36 drives the units 33 and 34 and oil is moved from reservoir 41 through conduit 40 and through port 28 and channel 31 and port 27 of the control valve through conduit 39, through pump 34, through conduit 38, and through port 25 and channel 30 and port 26 of the control valve through conduit 32 into conduit 21 and then into chamber 18 of the accumulator. The pressure in conduct 21 becomes great enough to overcome the pressure in the accumulator 15 and the accumulator is charged back to the illustrative pressure of 3000 p.s.i. The oil from unit 33 flows through conduit 45 and conduit 44 back to the reservoir 41.

The fourth step is that the pressure in the accumulator 15 is used to fast crank the diesel engine 10. This is accomplished as follows: The lever 51 is swung counterclockwise as shown in Figure 3 so that oil can flow through the fluid motor unit 11. Oil from the chamber 18 of the accumulator flows through conduit 21 into inlet 13 of the fluid motor causing fast cranking of the diesel engine 10 and out the outlet 14 into conduit 42 and then into reservoir 41. Oil from conduit 21 cannot flow through conduit 32 because of check valve 47 in conduit 38.

When the diesel engine 10 is running the lever 51 of the fluid motor is swung clockwise closing off flow through the fluid motor and the gasoline engine 36 recharges the accumulator 15 and then the gasoline engine is shut off and flow through the hydraulic circuit ceases.

In the above explanation of procedure steps "first," "second," "third" and "fourth," it is to be noted that in changing from the "first" step to the "second" step the control lever 51 was moved counterclockwise from the Fig. 3 position to establish communication between the inlet 13 and the starter motor unit cavity 58 to subject the starting motor unit to the pressure of fluid in the conduit 32 concurrently with manipulating the control valve from the Fig. 4 setting to the Fig. 5 setting to cause delivery of power from the pump-motor unit (power generator) to the starter motor unit 11 to slow crank the large engine. Thus the control valve 22 and the valve 51, 55, 56 constitute "valve means" for controlling this delivery of power from the power generator 34 to the starter motor unit 22. This "valve means" is also used in changing from step "second" to step "third" and from step "third" to step "fourth" and back to step "first."

The conduit 50 serves as a pressure release from the seal of the pump-motor unit 34 and keeps the seal in the pump from being blown loose. The feeler conduit 49 lets oil flow to the unloading valve 48 and the unloading valve opens at the illustrative pressure of 3000 p.s.i. and lets oil flow from the unloading valve into conduits 46 and 44 to the reservoir 41. More torque is required to start the gasoline engine than the gasoline engine can develop after it is started. Therefore it is necessary to increase the displacement so that the torque is increased so that the gasoline engine can be started and this has been done by adding the extra unit 33.

What is claimed is:

1. Apparatus for starting a diesel engine at a low temperature comprising a source of fluid under pressure, a hydraulic engine-starting motor unit including an inlet and an outlet and a shaft operatively connected to the crankshaft of the diesel engine, a first conduit in communication with the source of fluid under pressure and the motor inlet, a pump-motor unit, a spark ignition engine operatively connected to the pump-motor unit, a control valve having a housing provided with four ports and a rotatable element provided with two channels, a second conduit in communication with one port in the valve housing and an outlet of the pump-motor unit, a check valve in the second conduit preventing fluid flow from the valve toward the pump-motor unit, a reservoir containing fluid, a third conduit in communication with

the second conduit between the check valve and the pump-motor unit and also in communication with the reservoir, an unloading valve communicative with the third conduit, a fourth conduit in communication with the second conduit between said check valve and the control valve and also communicative through the unloading valve with the third conduit when containing fluid at sufficient pressure to open the unloading valve, a fifth conduit in communication with a second port in the housing of the control valve and an inlet of the pump-motor unit, a sixth conduit communicating between the reservoir and a third port in the control valve housing, a seventh conduit communicating between a fourth port of the control valve housing and the inlet of the engine-starting motor unit, and an eighth conduit in communication between the reservoir and the outlet of the engine-starting motor unit, and the control valve element being rotatable into a position wherein one of the channels communicates between casing ports first and fourth while the other channel communicates between casing ports second and third, and also rotatable into a position wherein one of the channels communicates between casing ports first and third while the other channel communicates between casing ports second and fourth, and also rotatable into a position wherein the rotatable element blocks intercommunication between any of said casing ports.

2. Apparatus for starting a diesel engine at a low temperature comprising a source of fluid under pressure, a hydraulic engine-starting motor unit including an inlet and an outlet and a shaft operatively connected to the crankshaft of the diesel engine, a first conduit in communication with the source of fluid under pressure and the motor inlet, a pump unit and a pump-motor unit operatively connected together and one of the units having a larger capacity than the other, a spark ignition engine operatively connected with said units, a control valve having a housing provided with four ports and a rotatable element provided with two channels, a second conduit disposed for communication between one port in the housing of the valve and the pump-motor unit outlet, a check valve in the second conduit preventing fluid flow from the control valve toward the pump-motor unit, a reservoir containing fluid, a third conduit in communication with the second conduit between the check valve and the pump-motor unit and also in communication with the reservoir, an unloading valve communicative with the third conduit, a fourth conduit in communication with the second conduit between the check valve and the control valve and also communicative through the unloading valve with the third conduit when containing fluid at sufficient pressure to open the unloading valve, a fifth conduit in communication between a second port in the control valve housing and the pump-motor unit inlet, a sixth conduit in communication between the fifth conduit and the motor unit inlet, a seventh conduit in communication between the motor unit outlet and the third conduit, an eighth conduit in communication between the reservoir and a third port in the control valve housing, a ninth conduit in communication between a fourth port of the control valve housing and the inlet of the engine-starting motor unit, and a tenth conduit in communication between the reservoir and the engine-starting motor outlet, and the control valve element being rotatable into a position wherein one of the channels communicates between casing ports first and fourth while the other channel communicates between casing ports second and third, and also rotatable into a position wherein one of the channels communicates between casing ports first and third while the other channel communicates between casing ports second and fourth, and also rotatable into a position wherein the rotatable element blocks intercommunication between any of said casing ports.

3. Apparatus for starting a cold internal combustion engine, comprising a starter motor unit operably connected with the engine and energizable to crank the same, a rechargeable energy storage unit for supplying power to the motor unit to energize such motor unit when connected in power transmitting relation therewith, a power generator connectible with the energy storage unit and drivable when so connected to supply power to such storage unit to recharge the same, said power generator being also connectible with the starter motor unit and being operable when so connected and when driven to supply power to such motor unit to energize the same, a relatively small internal combustion engine drivingly connected with the power generator, an engine cranking unit for the small engine and energizable by power received from the energy storage unit when connected therewith for cranking the small engine to start the same, and control means operable to establish a power transmitting connection between the energy storage unit and the small engine cranking unit, such control means being subsequently operable to establish a power transmitting connection between the power generator and the energy storage unit to recharge such unit, and such control means being thereafter operable to establish a power transmitting connection simultaneously from the power generator for the starter motor unit for the first-named engine and from the energy storage unit to such starter unit, wherefore power from the power generator and from the energy storage unit is simultaneously delivered to such starter motor unit for cranking the first-named engine.

4. Apparatus for starting a cold internal combustion engine, comprising a starter motor unit operably connected with the engine and energizable to crank the same, a rechargeable energy storage unit for supplying power to the motor unit to energize such motor unit when connected in power transmitting relation therewith, a combination power generator and engine cranking unit connectible with the energy storage unit and drivable when so connected to supply power to such storage unit to recharge the same, said combination unit being also connectible with the starter motor unit and being operable when so connected and when driven to supply power to such motor unit to energize the same, a relatively small internal combustion engine drivingly connected with said combination unit, said combination unit being energizable by power received from the energy storage unit when connected therewith for cranking the small engine to start the same, and control means operable to establish a power transmitting connection between the energy storage unit and said combination unit, such control means being subsequently operable after the small engine is started and driving said combination unit to establish a power transmitting connection between said combination unit and the energy storage unit to recharge such storage unit, and such control means being thereafter operable to establish a power transmitting connection simultaneously from said combination unit to the starter motor unit for the first-named engine and from the energy storage unit to such starter unit, wherefore power from the combination unit and from the energy storage unit is simultaneously delivered to such starter motor unit for cranking the first-named engine.

5. The combination set forth in claim 4 wherein there is an auxiliary engine cranking unit drivingly connected with the small engine and energizable by power received from the energy storage unit when connected therewith to drive the small engine and thus assist the combination unit in cranking the small engine, and said control means being also operable to connect said auxiliary unit with the energy storage unit concurrently with the connection of the combination unit with such storage unit.

References Cited in the file of this patent

UNITED STATES PATENTS

2,301,441	Nardone	Nov. 10, 1942
2,628,476	Grier	Feb. 17, 1953