June 29, 1948. L. W. BURCH 2,444,030

HUMIDITY AND TEMPERATURE RESPONSIVE DEVICE

Filed March 12, 1945

Fig 1

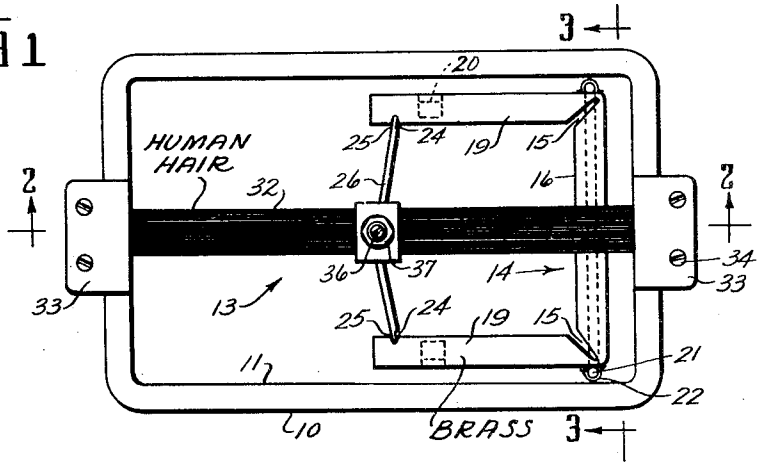

Fig 2

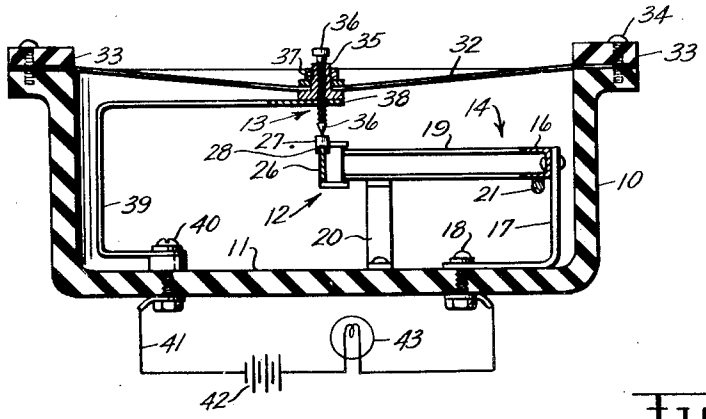

Fig 3

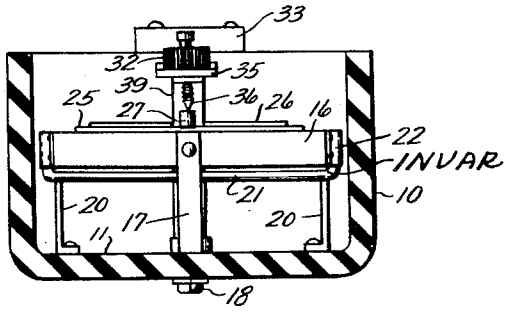

Fig 4

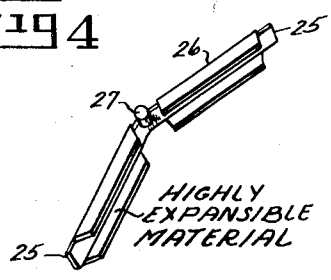

INVENTOR.
LYNDON W. BURCH
BY Joseph Ch. Hazell and Wade Koontz
ATTORNEYS

Patented June 29, 1948 2,444,030

UNITED STATES PATENT OFFICE

2,444,030

HUMIDITY AND TEMPERATURE RESPONSIVE DEVICE

Lyndon W. Burch, Pelham, N. Y.

Application March 12, 1945, Serial No. 582,382

9 Claims. (Cl. 200—52)

(Granted under the act of March 3, 1883, as amended April 30, 1928; 370 O. G. 757)

1

The invention described herein may be manufactured and used by or for Government for governmental purposes, without the payment to me of any royalty thereon.

This invention relates to a device which is actuated when humidity and temperature conditions are present which are conducive to the formation of ice, and which is especially adapted for use on an airplane to furnish a warning signal when such conditions occur.

An important object of this invention is to provide a device adapted for use on an airplane or the like which will quickly indicate when the humidity and temperature conditions in the atmosphere for forming ice are setting in, and to indicate this prior to the time that an ice load has actually accumulated upon the airplane.

Another object of this invention is to provide an improved switch combined with such a type of indicating device, said switch including a temperature responsive member that carries one of the contact elements and is in the shape of a truss which is adapted to minimize vibration and is very sensitive in its movement toward and away from the humidity responsive member and its contact element.

Another object of this invention is to provide a novel switch having temperature responsive and humidity responsive contact elements in an electric circuit which elements are movable along lines substantially at right angles to each other, so that they will make contact for closing the circuit only during the time that both the humidity and the temperature conditions are within the predetermined ranges conducive to the formation of ice.

A further object of this invention is to provide a device especially adapted for use on an airplane and arranged to be actuated when humidity and temperature conditions are conducive to the formation of ice, which device is instrumental in promptly operating an indicator or a warning signal that such a condition is setting in, so that appropriate and timely deicing action may be taken, and which device may likewise operate a relay to turn on deicers or wing heat, and to do so before an ice load has actually accumulated on the airplane.

These and various other objects and advantages are attained with this invention as will become apparent from the following description, taken in connection with the accompanying drawing wherein the invention is disclosed in its preferred form, it being evident that other arrangements and forms of construction may be

2

resorted to in carrying out the objects and purposes of this invention.

In the drawings:

Fig. 1 is a top plan view of my improved icing condition indicator.

Fig. 2 is a longitudinal vertical sectional view thereof, taken on line 2—2 of Fig. 1 and including a schematic view of the electric circuit.

Fig. 3 is a vertical cross-sectional view, taken on line 3—3 of Fig. 1.

Fig. 4 is a perspective view of the flexible bowed element of the temperature responsive means.

In the drawings my invention is illustrated as embodying a humidity and temperature responsive device which is arranged for giving a warning signal when an icing condition is present in the atmosphere, said device comprising a supporting body or casing 10 of insulating material containing a chamber 11 therein in which is housed the temperature responsive means 12 and the humidity responsive means 13.

The temperature responsive means 12 includes a temperature responsive member 14 constructed of a substantially channel-shaped bar of highly expansive steel or hard brass which is bent into U-shape and has its corners slitted at 15, as indicated in Fig. 1 thereby forming hinge points at these corners. It is mounted at its closed end or bight 16 upon a resilient metal bracket 17 that is secured by a binding post 18 in casing 10, and its legs 19 are slidable freely upon supporting posts 20 mounted in said casing.

This U-shaped temperature responsive member 14 is held at its closed end against expansion and contraction by a tie bar 21 secured at its ends by socket means 22 to the inner end parts of legs 19 adjacent the bight 16, and this bar 21 is constructed of substantially non-expansible material as Invar metal, so as to retain said end parts of the legs 19 constantly in fixedly spaced position.

The legs 19 of member 14 are notched near their outer ends at 24 and in these notches are mounted the ends 25 of a bowed metallic element 26 which is constructed of highly expansible material. This element 26 is flanged or channel-shaped having its ends 25 held in said notches 24 and carrying at its intermediate bowed portion an electric contact element 27 which is partly slit to provide spaced fingers 28 whereby it is clamped upon said bowed element 26.

This disclosed truss construction and its mounting means will minimize vibration of the temperature responsive means 12; and hereby, when the bight 16 expands due to increase of temperature, the outer ends of legs 19 will be

forced toward each other and the flanged member 26 will be bowed to move contact element 27 forward, toward the left as seen in Fig. 2. Furthermore, by this truss arrangement of member 14 including tie bar 21 the movement of the free ends of legs 19 will be greatly multiplied by movement of bight 16 thus greatly flexing bowed member 26, thereby causing enhanced and highly sensitive movement of contact element 27.

The humidity responsive means 13 includes a humidity sensitive member 32 which is made of human hair, goldbeaters skin, or a Cellophane diaphragm, or any other suitable material sensitive to humidity. Said humidity sensitive member 32 has its ends clamped in position on the body 10 by a pair of clamping means 33 which are secured onto the ends of the casing 10 by suitable elements 34. The member 32 carries at its center a contact supporting stem 35 which has the contact element 36 threaded or adjustably mounted therein and is secured to member 32 by a nut 37. The stem 35 is seated upon the free end 38 of a metallic supporting spring 39 which is mounted by a binding post 40 in the casing 10, and since contact 36 extends through said end 38 this spring gently urges member 32 downward serving to retain contact element 36 in a steady position, arranged to minimize vibration of said humidity responsive means 13.

An electric circuit 41, which is provided with a battery or source of current 42, is connected at one end to said binding post 40, and at its other end to the binding post 18 whereby the bracket 17 is mounted in the casing 10. By this arrangement the temperature responsive means 12 and the humidity responsive means 13, with their respective contact elements 27 and 36, are interposed in the electric circuit 41.

As illustrated in Fig. 2, the member included in and actuated by the electric circuit 41 is in the form of a signaling member 43 which is energized for providing a signal whenever the contact elements 27 and 36 are in engagement to close the circuit. This signaling member 43 is indicated herein in the form of a warning lamp, to provide a visible signal, but it may evidently be in some other form of signal or the like.

This device is particularly adapted for use on aircraft, and especially adapted to be mountable on the leading edge of the wing or the like, to give warning that the atmospheric conditions for forming ice are setting in.

It has been found that the conditions conducive to the formation of ice are present when a humidity condition ranging from 90% to 100% humidity saturation occurs, and a temperature condition within the range of 36° F. to 25° F. is present. In this invention, therefore, the temperature sensitive means 12 and the humidity sensitive means 13 will be so calibrated that contact between their elements 27 and 36 will be made whenever said conditions are both within the respective ranges as above indicated; but, whenever the respective temperature and humidity are not concurrently within the said ranges no contact will be made between the elements 27 and 36 and the circuit will not be closed, and consequently no signal will then be given, since higher temperatures will move the contact element 27 forwardly, to the left, as seen in Fig. 2, beyond the contact element 36, and lower temperatures will move the contact element 27 rearwardly to the right, and out of range of contact element 36, irrespective of the position of element 36 and the conditions of humidity that may exist in the surrounding atmosphere.

It is apparent from the above that I have provided a device which will promptly indicate the conditions of humidity and temperatures when they are conducive to the formation of ice, and do this prior to the time that any ice load actually starts forming on the airplane. It is also apparent that this device is especially suitable to operate a warning lamp and likewise any other signaling indicator, and similarly may be utilized to actuate a relay to turn on deicers or wing heat whenever temperature and humidity conditions are conducive to the formation of ice; in any event, that appropriate deicing action may be taken hereby in advance of the actual accumulation of an ice load on the airplane.

I claim:

1. A humidity and temperature responsive electric switch comprising a casing and two movable contact elements housed therein, humidity responsive means including a humidity sensitive member having its ends secured on the casing while its central part supports one of the contact elements so as to move in a certain direction upon humidity variations, conducting means for connecting said element in an electric circuit, temperature responsive means including a truss of expansible metal carrying the other of said contact elements, and means supporting said truss in the casing and connecting it in the circuit, said truss and its supporting means being arranged and constructed so that the truss will move its contact element with a minimum of vibration and in a direction at an angle to the movement of the other contact element upon variations of temperature, in such a manner that said elements are moved into contact only during the time that the conditions of humidity and temperature are conducive to the formation of ice.

2. In a device of the type used on an airplane for indicating icing conditions of the atmosphere and being provided with an electric circuit including a source of current and a signaling member actuated by the current when said circuit is closed, the improvement which comprises a casing and a switch therein interposed in said circuit, said switch including two movable contact elements, humidity responsive means including a humidity sensitive member having its ends secured on the casing and its intermediate part supporting one of the contact elements to move in a certain direction upon humidity variations, conducting means connecting said one element in the circuit, temperature responsive means including a truss of expansible metal carrying the other of said contact elements, and means supporting said truss in the casing and connecting it with its contact element in the circuit so as to move this contact element with a minimum of vibration and in a direction substantially at right angles to the movement of the other contact element upon variations of temperature.

3. A humidity and temperature responsive switch for closing an electric circuit, said switch comprising a support, two movable contact elements, humidity responsive means on the support carrying one of said elements and including conducting means connecting the element in the circuit and holding it in position, temperature responsive means including a trus-like member of highly expansible conductive material carrying the other element, and means supporting said member and connecting it with its contact element in the circuit, so as to actuate this element with a minimum of vibration, and to move said elements into contact to close the circuit when

the conditions of humidity and temperature are conducive to the formation of ice.

4. A humidity and temperature responsive switch for use in indicating the arrival of icing conditions, said switch comprising two contact elements each movable along one of two lines extending at an angle to one another, humidity responsive means to support and actuate one of said elements substantially along one line, and temperature responsive means to support and actuate the other of said elements substantially along the other line, said two actuating means being arranged and constructed to move independently of each other so that said elements are moved along said lines to join and close the switch only at the time when both the humidity and temperature conditions are conducive to the formation of ice.

5. The subject matter set forth in claim 4, wherein the humidity responsive means is held fixed at two opposite ends and carries on its central part the contact element which it actuates, said means being bow shaped and constructed so that during conditions of high humidity the means is caused to bow and thereby move said element toward switch closing position.

6. A humidity and temperature responsive switch device comprising a pair of movable contact elements, humidity responsive means to actuate one of said elements in one direction and temperature responsive means to actuate the other of said elements in a direction at an angle thereto and independently of the movement of the said one element, said two actuating means being moved into co-engagement to close the switch when the humidity and temperature conditions are conducive to the formation of ice, one of said means being in the shape of a truss of highly expansible material constructed and mounted so as to minimize vibration and the other being a bowed metallic element of highly expansible material mounted across the legs of said truss and adapted to be brought by them into contact with said humidity responsive means.

7. In a switch device the improvement which comprises a casing, two movable contact elements, means whereby one of said elements is mounted in said casing and is included in an electric circuit, humidity responsive means in the casing for actuating said element and temperature responsive means in the casing mounting the other of said elements and including it in the circuit, said two elements being carried by their mounting means, said means being adapted to move said elements independently of each other and in lines extending perpendicular to one another in such a manner that the elements will contact to close the circuit only while the conditions of humidity and temperature together come within a predetermined range.

8. A humidity and temperature-responsive switch for closing an electric circuit, said switch comprising a support, two movable contact elements, humidity responsive means secured by its ends to said support, the support carrying one of said contact elements on its intermediate portion and being provided with conducting means connecting the contact element in the circuit and holding it in position, said connecting and conducting means comprising a spring which gently urges said contact element downwardly to minimize the vibration thereof, and temperature-responsive means on the support carrying the other of said contact elements and connecting it in the circuit, said temperature-responsive means carrying said two contact elements and being arranged and constructed so as to move them in lines extending transverse to one another and independently of each other, so that the switch contact elements will close the circuit only while the conditions of humidity and temperature together are conducive to the formation of ice.

9. The subject matter set forth in claim 8 wherein said temperature responsive means comprises a U-shaped truss of highly expansible material having its two legs near its bight held in fixedly spaced relation, an expansible member mounted on said free ends of the legs and carrying the contact element holding means at the bight of the truss holding said bight rigidly while its legs are supported to be freely movable toward each other and apart in response to increase and decrease respectively of ambient temperature.

LYNDON W. BURCH.

REFERENCES CITED

The following references are of record in the file of this patent:

UNITED STATES PATENTS

Number	Name	Date
1,209,234	Truitt	Dec. 19, 1916
1,682,915	Lawrence	Sept. 4, 1928
1,807,306	Colman	May 26, 1931
2,369,215	Crise	Feb. 13, 1945

FOREIGN PATENTS

Number	Country	Date
226,629	Germany	Oct. 7, 1910