Feb. 1, 1966 J. F. WEIR 3,232,463

REFUSE COLLECTION AND PACKER BODY

Filed June 4, 1962 3 Sheets-Sheet 1

Fig. 1

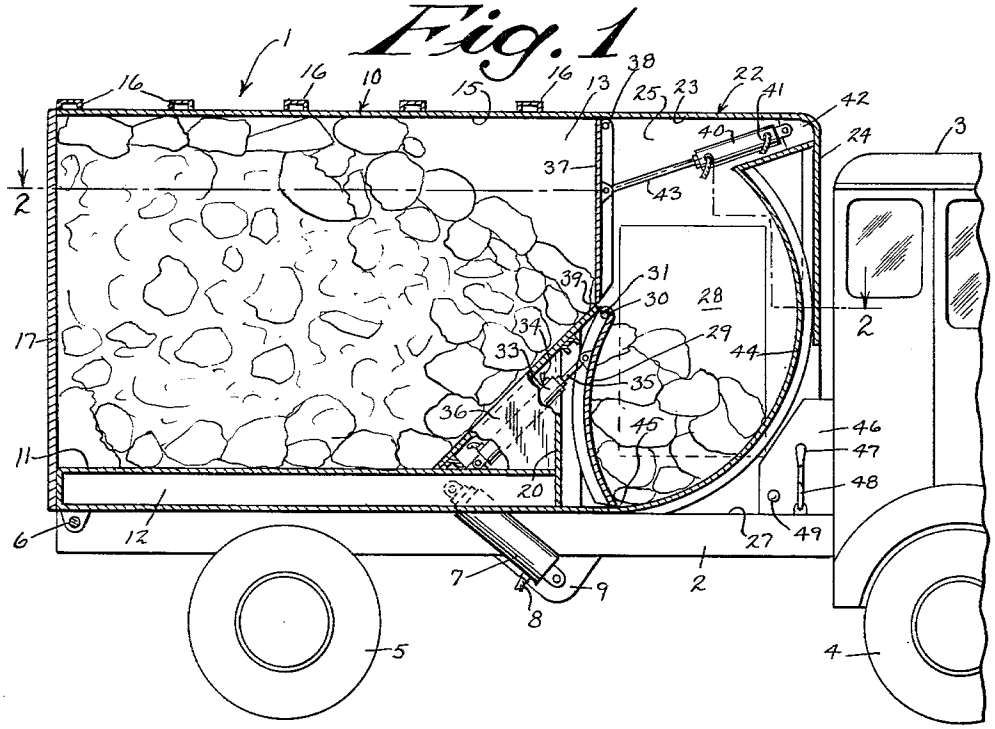

Fig. 2

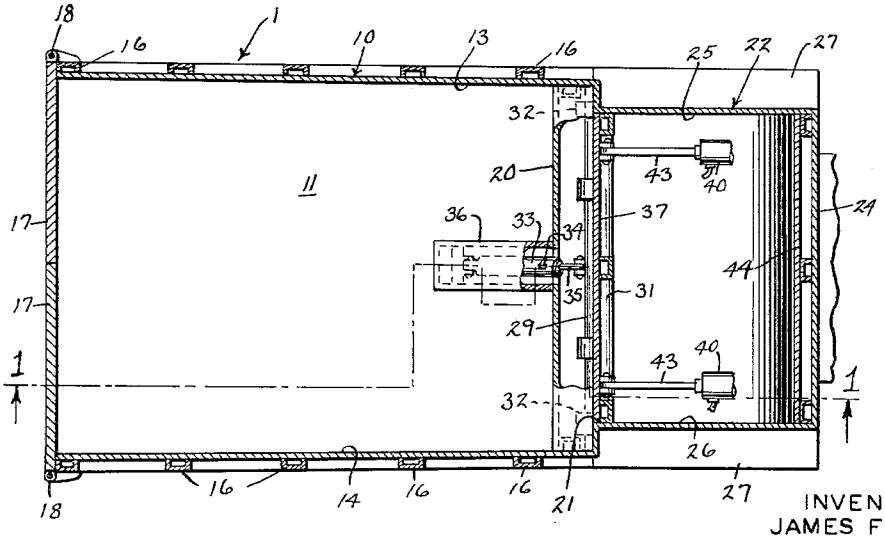

INVENTOR
JAMES F. WEIR

BY Thomas W. Thomson

ATTORNEY

Feb. 1, 1966 J. F. WEIR 3,232,463

REFUSE COLLECTION AND PACKER BODY

Filed June 4, 1962 3 Sheets-Sheet 2

Fig. 3

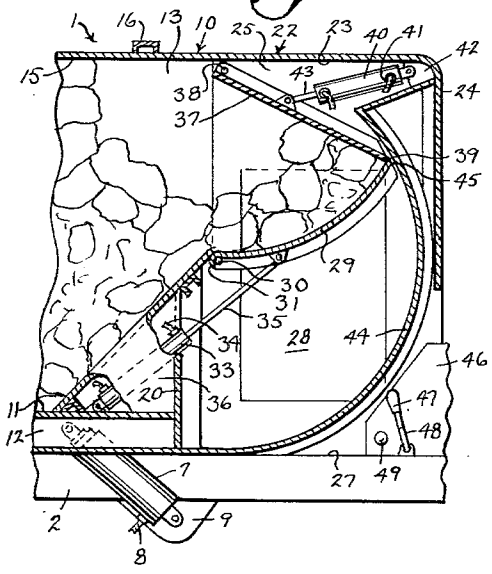

Fig. 4

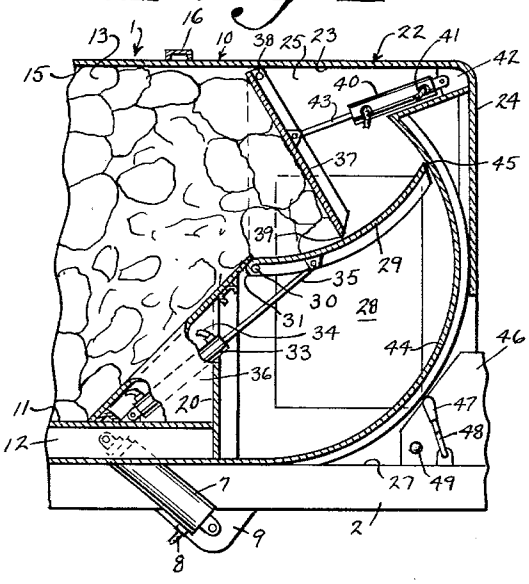

Fig. 5

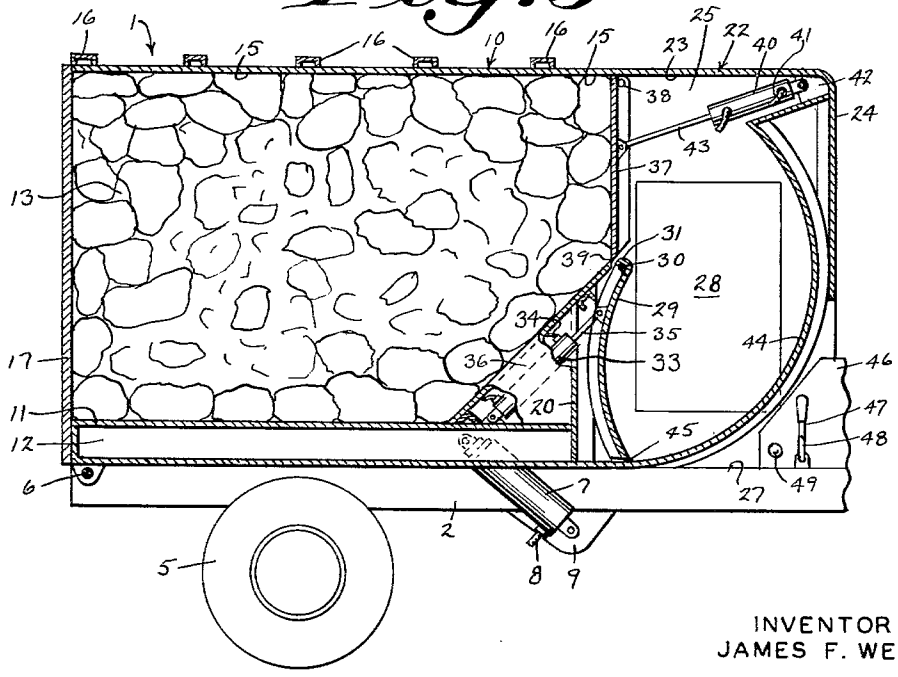

INVENTOR
JAMES F. WEIR

BY Thomas W. Sherman

ATTORNEY

Feb. 1, 1966 J. F. WEIR 3,232,463

REFUSE COLLECTION AND PACKER BODY

Filed June 4, 1962 3 Sheets-Sheet 3

Fig. 6

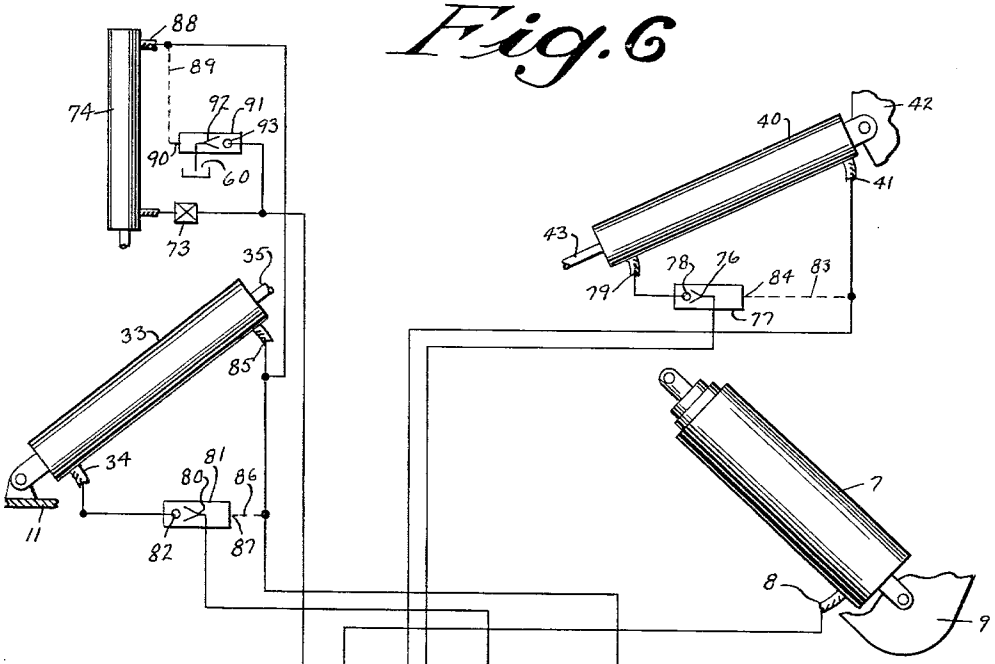

Fig. 7

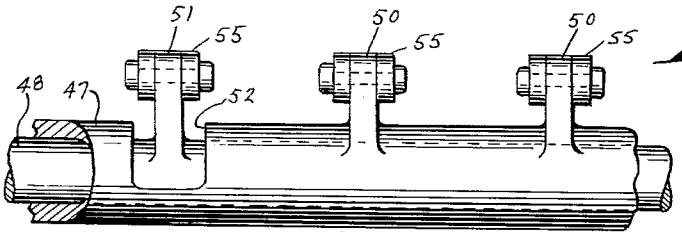

INVENTOR
JAMES F. WEIR

BY Thomas W. Sherman

United States Patent Office

3,232,463

Patented Feb. 1, 1966

3,232,463

REFUSE COLLECTION AND PACKER BODY

James F. Weir, New Holstein, Wis., assignor to M-B Corporation, New Holstein, Wis., a corporation of Wisconsin

Filed June 4, 1962, Ser. No. 199,964

1 Claim. (Cl. 214—510)

The present invention relates to a refuse collection and packer body for mounting on a vehicle chassis, and more particularly to a front loading collection and packer body which includes a collection receptacle having a loading opening in an upper portion of its front end and a hopper at the front end, together with a load lifting plate which lifts refuse deposited in the hopper and a packer plate which sweeps the refuse from the lifting plate into the collection receptacle through the loading opening.

Truck mounted refuse collection bodies having power loading mechanisms of various types mounted on their back ends are in common use today. Some rear end loading devices consist of buckets which receive refuse and carry it on tracks to the top of the body where it is then dumped into the body. Others have receptacles with packing mechanisms which pack the refuse directly into the body through an opening in a lower part of their back ends. Normally, both types of rear end loading refuse bodies are provided with powered mechanism to raise the body and thereby to dump refuse collected from the back end. While these and other such refuse bodies share the advantages of having fully enclosed refuse container portions and having mechanically or hydraulically powered loading and dumping devices, they have not proven to be completely satisfactory in several respects.

For example, the loading mechanism is generally quite heavy and cumbersome and the suspension of this cumbersome loading mechanism from the back end of the refuse body unbalances the vehicle. Then, in order to dump the collected refuse out of the back end of the body, it is necessary to raise the loading mechanism out of the path of the discharging refuse and this requirement necessitates additional heavy hydraulic or other power equipment on the back end of the body which further unbalances the load on the vehicle. As a result, when the bodies are raised to dump the center of gravity is raised and moved rearwardly, and may in fact be moved beyond the rear wheels of the vehicle. This may result in the load being moved sufficiently rearward so that the front wheels of the vehicle are lifted from the ground. The danger inherent in such an eventuality is obvious.

In those refuse collection bodies which dump refuse into the top of the body, the force of gravity alone may be insufficient to compress the bulky refuse thereby resulting in an inefficient use of the capacity of the body. Packing rams have been introduced to compress the refuse within the body, but heretofore such compression has been directed against one side of the body resulting in an uneven distribution of force which has required special body constructions with particular emphasis upon reinforcing the walls of the body. Whether packing rams are used for packing alone or also as a part of the loading mechanism, the bulky refuse tends to follow the ram when it is detracted to its normal position thus reducing the efficiency and neatness of the loading or packing operation.

In contrast, the refuse collection and packer body of this invention is adapted for front end loading of the refuse and the loading mechanism which deposits the refuse into the container portion of the body is mounted in its entirety at the front end of such container portion. Thus, the body is free for dumping through its after end and the heavy loading mechanism offsets the weight of the refuse during dumping thereby preventing the possibility of upsetting the vehicle during dumping. Additionally, the loading of the container portion is accomplished through a loading opening disposed in an upper portion of its front end thereby obtaining the benefits of gravity in depositing refuse into the collection container portion while at the same time minimizing the tendency for the refuse to fall back into the refuse hopper.

Accordingly, it is a principal object of the present invention to eliminate the disadvantages of rear loading by providing a front loading refuse collection and packer body.

It is another object of the present invention to provide a refuse collection and packer body which will position the bulk of its power mechanism between the wheels of the vehicle chassis on which it is mounted.

It is a further object of the present invention to provide a front loading refuse collection and packer body with a loading and packer mechanism which loads refuse through an opening in the top of the front end of an enclosed refuse container.

It is also an object of the present invention to provide a front loading refuse collection and packer body with a packer plate which also serves to close the loading opening provided in an otherwise enclosed container portion to prevent fall back of compressed refuse from the container portion.

It is yet another object of the present invention to provide a front loading refuse collection and packer body in which the packer mechanism may be used to expel refuse from the body during the dumping operation.

It is also an object of the present invention to provide a front loading refuse collection and packer body with a packer mechanism which distributes the packing force over all of the confining walls of the body.

It is also an object of the present invention to provide a refuse collection and packer body with powered loading mechanism using short hydraulic pistons permitting rapid loading.

It is also an object of the present invention to provide a front loading refuse collection and packer body with load and packer mechanism operating in automatic sequence.

The foregoing and other objects and advantages will appear from the description to follow. In the description, reference is made to the accompanying drawings which form a part hereof and in which there is shown by way of illustration a specific embodiment in which this invention may be practiced. This embodiment will be described in sufficient detail to enable those skilled in the art to practice this invention, but it is to be understood that other embodiments of the invention may be used and that changes may be made in the embodiment described without departing from the scope of the invention. Consequently, the following detailed description is not to be taken in a limiting sense; instead, the scope of the present invention is best defined by the appended claim.

In the drawings:

FIG. 1 is a view in elevation of a preferred embodiment of the refuse collection and packer body mounted upon a truck, with the body shown in section along the line 1—1 in FIG. 2,

FIG. 2 is a top view in section along the line 2—2 in FIG. 1,

FIGS. 3, 4 and 5 are views in section similar to FIG. 1 and illustrating the elements of the refuse collection and packer body in successive operating positions,

FIG. 6 is a diagrammatic representation of the hydraulic system of the embodiment of the invention shown in FIG. 1, and

FIG. 7 is a fragmentary view in side elevation of portions of the control and automatic cycling levers shown in FIG. 6.

Referring now specifically to the drawings, FIG. 1 shows an embodiment of the refuse collection and packer

body 1 of the present invention in section and mounted on a vehicle chassis 2, only a portion of which is represented. A rear fragment of a cab 3 is represented, along with the front wheels 4 and rear wheels 5. The packer body 1 is fastened to the chassis 2 near the after end of the body by a pivotal mounting 6 on the underside of the body, and the forward portion of the packer body is mounted on the chassis 2 by means of two hydraulic dumping cylinders 7, which have their blind ends 8 suitably mounted on supporting members 9 built onto the chassis 2.

The rear portion, constituting the largest portion of the packer body 1 forms a collection receptacle 10. The collection receptacle 10 is a box-like member enclosed by a floor 11 on supporting beams 12, side walls 13 and 14, and a roof 15. The side walls 13 and 14 and the roof 15 are reinforced by transverse channel members 16. The after end of the collection receptacle 10 is closed by a pair of dumping doors 17, which are mounted by hinges 18 to the transverse channel members 16 along the ends of side walls 13 and 14, and any suitable manually releasable latch (not shown) retains the doors 17 in a normally closed position. A lower half of the otherwise open front end of the collection receptacle 10 is closed by a retaining wall 20 thereby forming a loading opening 21 for the collection receptacle 10 in an upper portion thereof. Note that although the side walls 13 and 14 appear to be parallel, they actually diverge slightly toward the rear.

A loading hopper 22 on the front end of the collection receptacle 10 completes the packer body 1. A ceiling 23 of the loading hopper 22 is flush with the roof 15 of the collection receptacle 10 and extends forward therefrom to a front panel 24 of the loading hopper. As shown in FIG. 2, side panels 25 and 26 of the hopper 21 are recessed inwardly from the side walls 13 and 14 of the collection receptacle 10, and loading platforms 27 extend from the chassis 2 to provide a floor for the protected loading and riding area thus formed. A loading door 28 is provided in each of the side panels 25 and 26 to permit a crew to empty refuse containers into the loading hopper 22.

A load lifting plate 29 has a normal loading position suspended across the lower portion of the back end of the loading hopper 22 in front of the retaining wall 20, as shown in FIGS. 1 and 5. Mounting studs 30 extend from either end of the lifting plate 29 adjacent a top edge 31 thereof, and the studs 30 are journaled in bearings 32 extending from the back edges of the side panels 25 and 26 of the loading hopper 22 so that the lifting plate 29 is pivotally mounted for rotation about a horizontal axis adjacent to the top of the retaining wall 20. A hydraulic cylinder 33 to drive the load lifting plate 29 extends rearwardly from the center of the retaining wall 20 with its blind end 34 pivotally anchored to the floor 11 of the collection receptacle 10 and with its piston rod 35 connected to the load lifting plate 29 below its axis of rotation and preferably above the center of its back surface. A shroud 36 slanting rearwardly from the retaining wall 20 to the floor 11 of the collection receptacle 10 protects the cylinder 33.

A packer plate 37 in its normal position is suspended from a horizontal, pivotal axis 38 in its top edge adjacent the ceiling 23 of the loading hopper 22 directly above the top edge 31 of the load lifting plate 29. Since the packer plate 37 extends across the full width of the loading hopper 22 and in its normal suspended position its lower edge 39 extends to the top of the retaining wall 20, the packer plate 37 closes the loading opening 21 and completes the enclosing of the collection receptacle 10. A pair of hydraulic cylinders 40 for driving the packer plate 37 are pivotally anchored at their blind ends 41 to suitable support members 42 located at the junction of the ceiling 23 and the front panel 24 of the loading hopper 22. The piston rods 43 of the hydraulic cylinders 40 are

suitably connected to the packer plate 36 to draw the packer plate 36 forward and upward from a vertical position and return.

While the packer plate 37 has a plane leading surface, the load lifting plate 29 is concave with a cross sectional configuration of a segment of a circle formed by the rotation of the packer plate 37 about its axis 38 when the load lifting plate 29 is pivoted forward and upward to its highest position as shown in FIGS. 3 and 4. Similarly, the loading hopper 22 has a front-bottom wall 44 shaped, in vertical section, as a segment of the circle described by the lower edge 45 of the load lifting plate 22 as it is pivoted up to its highest position.

Referring to FIGS. 1, 6 and 7, a hydraulic system control package 46 is mounted on the vehicle chassis 2 adjacent the back of the vehicle cab 3. Thus, when the collection and packer body 1 is in its normal position, the hydraulic control package 46 is largely shielded and enclosed by the loading hopper 21. Projecting from the control package 46 beyond the loading hopper 21 on both sides are duplicate sets of controls each consisting of an automatic cycling lever 47, a control lever 48, and a push rod 49. The automatic cycling lever 47 is formed of steel tubing and four eyes 50 are welded in a row to project from its external surface. The control lever 48 is a steel rod which is mounted within the tubing of the automatic cycling lever 47 to permit the levers 47 and 48 to rotate independently of each other. An eye 51 is welded to the surface of the control lever 48 to protrude through a slot 52 provided in the wall of the tubing of the automatic cycling control lever 47 at one end of the row of eyes 50.

A main control valve 53 is the primary component of the hydraulic system control package 46 and the control valve 53 is provided with five spools. One spool, a door and body spool 54 is connected by a forked-end adjustable link 55 to the eye 51 on the control lever 48. The remaining four spools, a packer retract spool 56, a lift riser spool 57, a packer sweep spool 58 and a lift retract spool 59 are each connected by an adjustable link 55 to an eye 50 on the automatic cycling lever 47. The control valve 53 is of the open center type in which oil, supplied under pressure from a reservoir 60 by a pump 61, normally flows through the control valve 53 and then returns to the reservoir 60. The hydraulic pump 61 is driven by a conventional power take-off from the vehicle transmission (not shown).

A selector feed port 62 of the valve 53 is controlled by the door and body spool 54 so that the normally closed port 62 is opened when the spool 54 is extended by movement of the control lever 48. The packer retract spool 56 controls a packer retract port 63 and a packer exhaust port 64. The packer retract port is normally open to the reservoir 60 and is opened to the fluid under pressure when the packer retract spool 56 is extended. The packer exhaust port 64 is normally closed but is opened to the reservoir 60 when the packer retract spool 56 is extended. The lift riser spool 57 controls a lift riser port 65 which is normally open to the reservoir 60 and which is opened to fluid under pressure when the spool 57 is extended. A packer sweep port 66 and a lift exhaust port 67 are controlled by the packer sweep spool 58. The packer sweep port 66 is normally closed but is opened to the fluid under pressure when the spool 58 is extended, and the lift exhaust port 67 is likewise normally closed but extending the spool 58 opens the lift exhaust port 67 to the reservoir 60. Finally, the lift retract spool 59 controls a packer and door port 68 which is normally opened to the reservoir 60 and which is opened to fluid pressure when the spool 59 is extended. Each of the spools 56, 57, 58 and 59 has an associated pilot controlled detent mechanism 69 which cocks the respective spool in an extended position. Extending each of the spools of the master control valve 53 will block the flow of fluid under

pressure to the succeeding spools. For example, extending the door and body spool 54 blocks the flow of fluid beyond the selector feed port 62, and extending the packer retact spool 56 blocks the flow of fluid beyond the ports 63 and 64.

The selector feed port 62 is connected to an inlet port 70 of a selector valve 71. The selector valve 71 has an outlet port 72 connected through a needle valve 73 to the rod ends of a pair of door operating cylinders 74. A second outlet port 75 of the selector valve 71 is connected to the blind ends 8 of the pair of body dumping cylinders 7. The push rods 49 are directly mechanically connected to operate the selector valve 71.

The packer retract port 63 is connected to the free-flow side 76 of a packer pilot controlled check valve 77. The controlled flow side 78 of the pilot controlled check valve 77 is connected to the rod ends 79 of the packer plate cylinders 40. The packer plate exhaust port 64 is connected to the blind ends 41 of the packer plate cylinders 40.

The lift riser port 65 is connected to the free-flow side 80 of a lift pilot controlled check valve 81 which is connected through its controlled side 82 to the blind end 34 of the lift cylinder 33. The packer sweep port 66 is connected to the blind ends 41 of the packer plate cylinders 40 and to a pilot line 83 leading to the pilot control side 84 of the packer pilot controlled check valve 77. The lift plate exhaust port 67 is connected to the rod end 85 of the lift cylinder 33.

The lift and door port 68 also is connected to the rod end 85 of the lift cylinder 33, and through a pilot line 86 is connected to the pilot end 87 of the lift plate pilot controlled check valve 81. In addition, that same port 68 is connected to the blind ends 88 of the door cylinders 74 and to a pilot line 89 on the pilot side 90 of a door pilot controlled check valve 91. The door pilot controlled check valve 91 has its free flow side 92 connected to the reservoir 60, and its controlled flow side 93 is connected through the needle valves 73 to the rod ends 71 of the door cylinders 74.

It should be noted that the main control valve 53, the pilot controlled check valves, the selector valve 71 and the needle valves 73 are commercially available items, and taken alone are not a part of this invention.

To operate the power loading mechanism, it being assumed that the loading hopper 22 has a load of refuse and that the elements are in their normal loading position as shown in FIG. 1, the workman first closes the loading doors 28 by positioning the push rod 49 in its door-actuating position and moving the handle of the control lever 48 rearward. By so doing, fluid is sent out of the now open selector feed port 62 of the main control valve 53 to the selector valve 71 which in turn has been actuated to route the fluid to the rod ends of the door cylinders 74. The fluid entering the rod ends of the door cylinders 74 closes the doors 28 and drives the fluid from the blind ends 88 of the door cylinders 74 through the lift exhaust port 68 which is normally open to the reservoir 60.

After the doors 28 have closed, the control lever 48 is released thereby returning the door and body spool to neutral and permitting fluid flow to the remaining spools. The workman may then actuate the automatic cycling lever 47 thereby simultaneously cocking all four automatic cycling spools 56, 57, 58 and 59 which will be held in an extended position by the corresponding valve detent mechanisms 69. The following operations occur automatically after the spools 56, 57, 58 and 59 are cocked: fluid flows from the packer retract port 63 through the check valve 77 to the rod ends 79 of the packer cylinders 40, retracting and raising the packer plate 37 to its highest position. Fluid from the blind ends 41 of the packer cylinders 40 will be expelled to the reservoir 60 through the packer exhaust port 64. When the packer plate 37 has reached the end of its stroke, the pressure in the main control valve 53 will increase thereby triggering the detent mechanism 69 corresponding to the packer retract spool 56 to release that spool 56 which returns to its neutral position.

Next, fluid will flow from the lift riser port 65 through the check valve 81 to the blind end 34 of the lift cylinder 33, driving the load lifting plate 29 to its highest position while expelling fluid from the rod end 85 of the lift cylinder 33 through the lift exhaust port 67 to the reservoir 60. The elements are now in the position shown in FIG. 3 with the refuse lifted to a level where it may be swept into the collection receptacle 10. When the lift cylinder 33 reaches the end of its stroke, the line pressure rises tripping the corresponding detent mechanism 69 which releases the lift riser spool 57 for return to its neutral position.

Fluid will now flow from the packer sweep port 66 to the blind ends 41 of the packer cylinders 40 and through the pilot line 83 to the pilot side 84 of the packer pilot control check valve 77 thereby releasing the control side 78 of the packer pilot control check valve 77 to permit the fluids in the rod ends 79 of the packer cylinders 40 to be expelled back through the packer retract port 63 to the reservoir 60. Thus, the packer plate 36 is forced downwardly and rearwardly, sweeping refuse from the load lifting plate 29 into the collection receptacle 10 through the loading opening 21, as shown in FIG. 4. When the corresponding detent mechanism 69 responds to the completion of the sweep stroke of the packer plate 37 and releases the packer sweep spool 58, fluid flows from the lift retract port 68.

Fluid from the lift retract port 68 flows to the rod end 85 of the lift cylinder 33, acts on the pilot side 87 of the lift pilot controlled check valve 81, and acts on the pilot side 90 of the pilot controlled door check valve 91. Thus, the load lifting plate 29 is retracted to its normal position; the fluid in the blind end 34 of the lift cylinder 33 is expelled through the control side 82 of the check valve 81 back through the lift riser port 65 to the reservoir 60; the loading doors 28 are opened, and fluid from the rod ends of the door cylinders 74 returns to the reservoir 60 through the controlled side 93 of the door check valve 91. The loading mechanism is now returned to its normal position as shown in FIG. 5, with the refuse deposited in the collection receptacle 10, and the packer plate 37 acting as a door to prevent the refuse from falling back into the loading hopper 22.

If the workmen desire to load the loading hopper 22 from one side only, the appropriate needle valve 73 associated with each door cylinder 74 may be closed, inactivating that door. Also if it is desired to lock one or both loading doors 28 in an intermediate position between open and closed, the needle valves 73 may be used for that purpose.

After the collection receptacle 10 has been filled to the extent that the packer plate 37 is unable to force more refuse into it, the loading hopper 22 may be loaded once more, the loading doors 28 closed, and the truck driven to the dumping site. In order to dump the contents out of the collection receptacle 10, it is first necessary to open the rear dumping doors 17. Then the workman may move the push rod 49 to its dump position, thereby setting the selector valve 71 for dumping, and then actuate the control lever 48, pulling out the body spool 54.

The extended spool 54 will permit fluid to flow from the selector valve feed port 62 in the main control valve 53 to the selector valve 71, where it will be directed to the blind ends 8 of the dumping cylinders 7, pivoting the front end of the collection and packer body 1 upward on its pivotal mounting 6 located toward its after end. When the packer body 1 has been raised to its highest position, the workman may actuate the automatic cycling lever 47, forcing the refuse in the loading hopper 22 into the collection receptacle 10. Since the collection receptacle 10 was already tightly packed full, the refuse from

the loading hopper 22 driven by the packer plate 37 will break loose compacted refuse in the collection receptacle 10, forcing it out through the dumping doors 17.

The packer body 1 may be lowered, when empty, by reversely actuating the control lever 47 thus permitting the body to drop by force of gravity, driving the fluid from the dumping cylinder 7 back through the control valve 53 to the reservoir 60. The truck is thus prepared to collect another load of refuse. Of course, it is not necessary that the packer body 1 be completely filled before dumping, since the dumping mechanism will obviously operate when the packer body is empty or filled.

When the packer body 1 is filled as in FIG. 4, and the packer plate 37 compresses the refuse, the compression force will be distributed throughout the collection receptacle 10. Some of the force initially directed backward toward the dumping doors 17 will be reflected forward against the retaining wall 20, and some of that compression force will be dissipated normal to its initial direction and against the roof 15, side walls 13, 14 and floor 11 of the collection receptacle 10. The resulting distribution of compression force permits uniform construction of all parts of the packer body 1 with the attending uniform distribution of weight and simplicity of construction.

It is to be noted that the incidence of the weight of the hydraulic components is either confined to the central portion of the chassis 2 or it is in the loading hopper 22 directly above the central portion of the chassis 2 between the front wheels 4 and the rear wheels 5. That remains true whether the packer body 1 is in its normal level position, or raised to its dumping position. No additional hydraulic equipment is needed to lift a loading mechanism clear from the rear doors during dumping as is required by some prior models. In the present invention, the position of the heavy hydraulic equipment tends to counterbalance the load weight, rather than to accentuate the accumulation of weight at the after end as in some prior models. Thus, the stability and superior loading and unloading capabilities of a body made according to the present invention are achieved.

I claim:

A refuse collection vehicle comprising the combination of:

a chassis suspended on wheels and having a cab and an engine mounted on its front end;

a packer body pivotally mounted on top of the after end of said chassis so that its front end may be raised for dumping;

said packer body including a refuse collection receptacle with a top portion of its front end open for receiving refuse and dumping doors in its after end through which said refuse may be ejected, and a loading hopper approximately as wide as said cab immovably mounted to said front end of said receptacle immediately behind said cab and being adapted for low level side loading of refuse with a lifting plate to raise said refuse to said open top portion of said front end of said receptacle and a packer plate to sweep said refuse rearwardly from said lifting plate into said receptacle and to close the front of said receptacle;

a hydraulic system driven by said engine to raise said packer body for dumping and to actuate said lifting plate and said packer plate and having a control package mounted beneath said hopper immediately behind said cab;

and hydraulic side loading doors in said loading hopper connected to be hydraulically closed by said hydraulic system as a first step in transferring refuse from said hopper to said refuse receptacle and to be automatically opened when said lifting plate is restored to its normal position after said refuse has been swept into said receptacle by said packer plate.

References Cited by the Examiner

UNITED STATES PATENTS

2,480,527	8/1949	Wachter	214—82
2,561,608	7/1951	Boissonnault	214—833 X
2,696,925	12/1954	Le Laurin	214—82
2,837,230	6/1958	Herterich	214—83.3 X
2,863,580	12/1958	Kamin	214—504
3,049,256	8/1962	Urban	214—518

GERALD M. FORLENZA, *Primary Examiner.*

ERNEST A. FALLER, HUGO O. SCHULZ, *Examiners.*