Dec. 8, 1970 J. PRITULSKY 3,546,656

ELECTRICAL CONNECTOR ASSEMBLY

Filed April 2, 1969

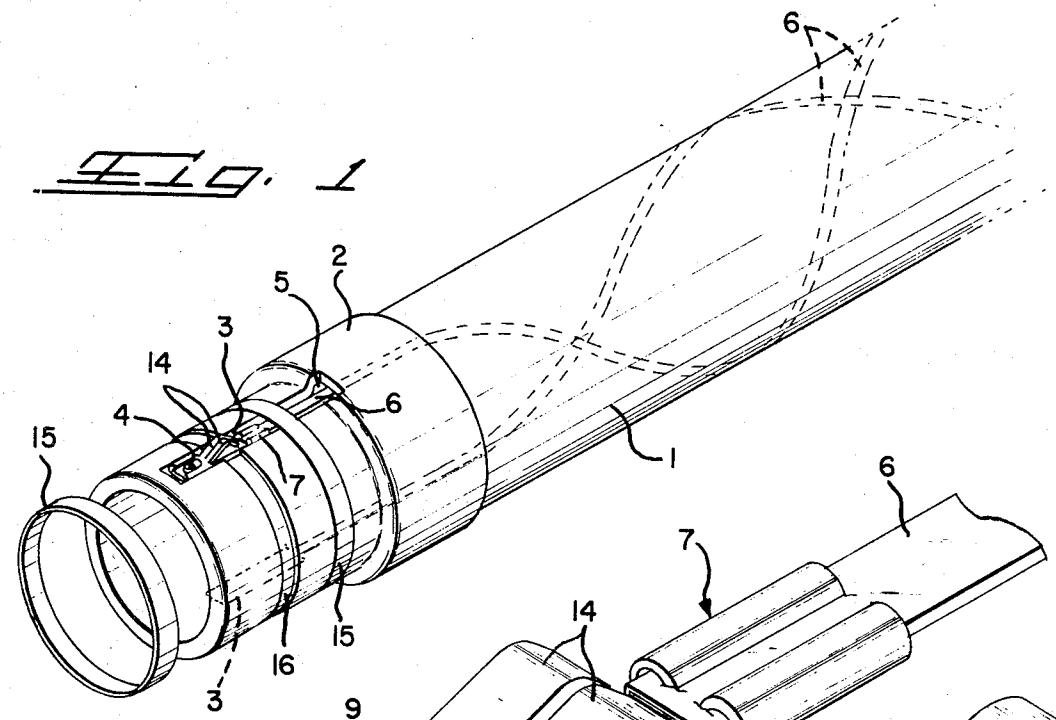

Fig. 1

Fig. 2

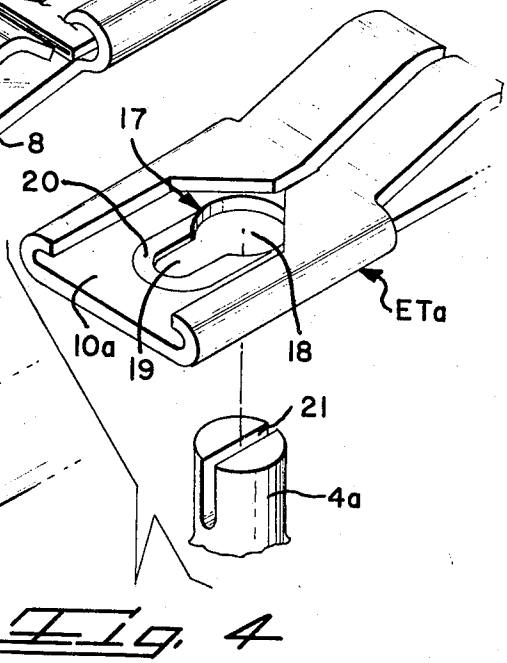

Fig. 4

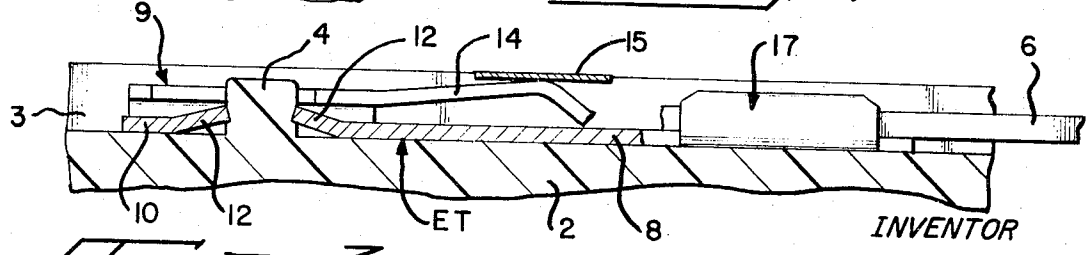

Fig. 3

INVENTOR

James Pritulsky

BY Adrian J. LaRue

United States Patent Office

3,546,656

Patented Dec. 8, 1970

3,546,656

ELECTRICAL CONNECTOR ASSEMBLY

James Pritulsky, Harrisburg, Pa., assignor to
AMP Incorporated, Harrisburg, Pa.

Filed Apr. 2, 1969, Ser. No. 812,721
Int. Cl. H01r 3/04
U.S. Cl. 339—16
10 Claims

ABSTRACT OF THE DISCLOSURE

An electrical connector assembly comprises a tubular member having longitudinal channels disposed in a dielectric end, electrical rings secured on an exterior surface of the dielectric end in an axially spaced manner and in communication with the longitudinal channels, electrical terminals disposed in respective ones of the channels and having first sections electrically connected to insulated electrical conductors disposed along an inside surface of the tubular member and second spring contact means in spring-biased electrical engagement with respective ones of the rings, and means provided by the dielectric end and the terminals securing the terminals in position in the channels.

This invention relates to electrical connectors and more particularly to electrical connectors for use in hose attachments of vacuum cleaners or the like.

In vacuum cleaners, especially of the cannister type, the attachments for use at the end of a hose attachment were inefficient, especially in the case of rug cleaning attachments, because the rug cleaning attachments were not provided with power-operated means such as, for example, power-driven brush means to agitate the rug thereby facilitating cleaning the rug due to the dirt particles being forced into motion by the agitating brush means for collection by the vacuum cleaner. Of course, there have been vacuum cleaner hose attachments provided with electrical wiring means defining power-distribution means for operating power-driven attachments, but they have been unsatisfactory for various and sundry reasons along with the electrical connector assemblies associated therewith.

An object of the invention is to provide an electrical connector assembly for use in conjunction with vacuum cleaner hose attachments or the like.

Another object is the provision of an electrical connector assembly wherein securing means is provided by the electrical terminals and a section of the hose means for securing the terminals in position for electrical connection with slip rings.

A further object is to provide spring-biased contact members of the electrical terminals which are maintained in constant spring engagement with slip rings.

An additional object is the provision of electrical terminals that remain in position when slip rings are removed or prior to slip rings being moved into an assembled position.

Other objects and attainments of the present invention will become apparent to those skilled in the art upon a reading of the following detailed description when taken in conjunction with the drawings in which there are shown and described illustrative embodiments of the invention; it is to be understood, however, that these embodiments are not intended to be exhaustive nor limiting of the invention but are given for purposes of illustration in order that others skilled in the art may fully understand the invention and the principles thereof and the manner of applying it in practical use so that they may modify it in various forms, each as may be best suited to the conditions of a particular use.

In the drawings:

FIG. 1 is a perspective and exploded view of an end of a vacuum cleaner hose with the electrical connector assembly in position thereon and with one of the slip rings exploded therefrom;

FIG. 2 is an exploded perspective view of an electrical terminal and the carrier member for carrying the electrical terminal;

FIG. 3 is a cross-sectional view of the electrical connector assembly of FIG. 1; and

FIG. 4 is a perspective and exploded view of an alternative embodiment of the electrical terminal and carrying means therefor.

Turning now to the drawings and especially FIGS. 1 through 3, a vacuum cleaner hose attachment **1** is illustrated in FIG. 1 and the hose member thereof has a plastic nozzle **2** secured at one end thereof defining a carrier member. Diametrical channels **3** are disposed in nozzle **2** and they are provided with unitary posts **4** extending outwardly from channels **3** and terminating just short of the depth of channels **3**. Channels **3** communicate with openings **5** at the junction between the large and small diameter sections of nozzle **2**, openings **5** being in communication with the inside of the hose member so that terminated flat electrical conductors **6** can be positioned in channels **3** and the conductors are spirally disposed along the inside surface of the hose member of hose attachment **1** to prevent any clogging thereof. Electrical conductors **6** are coated with a suitable dielectric coating material such as, for example, polysulfone or some other suitable dielectric material.

The ends of conductors **6** are terminated to ferrule members **7** of electrical terminals ET, ferrule members **7** being constructed in accordance with U.S. Pat. No. 3,395,381. Electrical terminal ET is made from a suitable material in accordance with conventional die-stamping techniques and the material is preferably phosphor bronze which provides the necessary spring characteristics. Electrical terminal ET has a transition **8** connecting ferrule member **7** with contact member **9** which is provided with base **10**, transition **8** and base **10** forming a base means. Base **10** has an opening **11** in which post **4** is disposed and upwardly-directed diametrically-disposed lugs **12** for biting into the plastic material of post **4** as illustrated in FIG. 3 to thereby secure electrical terminal in position in channels **3**.

Contact member **9** has sides **13** provided with free ends thereof extending over and along base **10** to expose opening **11** and lugs **12**. The inner ends of sides **13** are formed into spring contact members **14**. Each of spring contact members **14** has a leading upwardly-directed section which at its upper limits has an arcuate ring-engaging section and this terminates at a free end which is disposed in a downwardly-directed manner toward transition **8**, the free ends of the spring contact members being bent toward the transition of the terminal provide an anti-overstress feature as well as preventing any damage to the spring contact members of the forwardmost terminal when a slip ring **15** is removed from nozzle **2**.

Slip rings **15** are made from a suitable electrically-conductive material and they are disposed in circular channels **16** which extend normal with respect to channels **3** and they are in communication therewith so that spring contact members **14** of a respective electrical terminal are in electrical engagement therewith. Channels **16** are axially displaced with respect to each other so that a slip ring **15** is properly positioned so as to be in electrical engagement with spring contact members **14** of a respective electrical terminal.

In assembly, electrical terminals ET are terminated on ends of electrical conductors **6** via ferrule members **7** and the terminated electrical conductors are fed through

openings 5 so that they are secured in channels 3 via the terminals being secured on post 4. Then slip rings 15 are axially moved along nozzle 2 and positioned within respective channels 16 thereby wipingly engaging spring contact members 14, which normally extend above the outer surface of nozzle 2, and placing them under a constant bias.

A source of supply is provided within a socket of a vacuum cleaner (not shown) to receive nozzle 2 so that electrical condctors 6 are energized thereby. The other end of hose attachment 1 can be provided with a suitable receptacle arrangement to interconnect with a power-operated device so that the energized electrical conductors 6 can energize the same.

FIG. 4 illustrates an alternative embodiment to secure electrical terminal ET*a* in position on a post 4*a* extending outwardly from its channel. Base 10*a* is provided with a keyhole slot 17 having a large section 18 and a small section 19. The area around small section 19 is provided with beveled surfaces 20 (only the top surface being shown) so that a thin edge is provided. Post 4*a* is provided with a slot 21. Terminal ET*a* is secured onto post 4*a* by moving the terminal in position onto post 4*a* via large section 18 which is of a sufficient diameter to provide clearance therebetween and then electrical terminal ET*a* is moved so that small section 19 is forced into engagement with post 4*a*, the thin edge of small section 19 biting into the material of post 4*a* and also forcing the sections of post 4*a* created by slot 21 together thereby securing electrical terminal ET*a* in position on post 4*a*.

It will, therefore, be appreciated that the aforementioned and other desirable objects have been achieved; however, it should be emphasized that the particular embodiments of the invention, which are shown and described herein, are intended as merely illustrative and not as restrictive of the invention.

The invention is claimed in accordance with the following:

1. An electrical connector assembly comprising a dielectric carrier member having channel means disposed therein and extending axially therealong, unitary post means extending outwardly from the bottom surface of said channel means, said carrier member having other channel means disposed therein and extending substantially normal with respect to the first-mentioned channel means and being in communication therewith, electrical terminal means disposed in said channel means and having base means, spring contact means extending upwardly from said base means and having arcuate contact-engaging means in alignment with said other channel means, post-engaging means provided by said base means securely engaging said post means, and contact means securely disposed in said other channel means and in electrical contact with said contact-engaging means thereby placing said spring contact means under a constant bias.

2. An electrical connector assembly according to claim 1 wherein said post-engaging means comprises an aperture in said base means in which said post means is disposed and upwardly-directed diametrically-disposed lugs biting into said post means.

3. An electrical connector assembly according to claim 1 wherein said post-engaging means comprises a keyhole slot in said base means, said keyhole slot having a large section through which said post means is initially disposed and a small section bitingly engaging said post means upon said terminal means being moved so that said small section is brought into securing engagement with said post means.

4. An electrical connector assembly according to claim 3 wherein said post means has a slot therein.

5. An electrical connector assembly according to claim 1 wherein said spring contact means is provided with dual spring contact members having free ends directed toward said base means to define anti-overstress means to prevent overstressing said spring contact members.

6. In a vacuum cleaner hose attachment, a hose member having a dielectric nozzle at one end thereof, said nozzle having first channels disposed along an exterior surface thereof and provided with post members, said nozzle having openings therein in alignment with said first channels and in communication with an interior of said hose member, insulated electrical conductors disposed along an interior surface of said hose member and extending through said openings and along said first channels, electrical terminals having base members and ferrule members, said ferrule members having means electrically connecting said electrical terminals to said insulated electrical conductors, securing means provided by said base members securing said terminals on said posts in said channels, spring contact members provided by said base members which extend in an upward direction in said channels, said spring contact members having contact-engaging areas adjacent upper free ends thereof, said nozzle having second channels axially spaced along said exterior surface and being in communication with the respective first channels, and contact members disposed in said second channels and being in electrical engagement with the respective spring contact members in a constantly biased manner.

7. In a vacuum cleaner hose attachment according to claim 6 wherein said second channels are circular and said contact members are slip rings.

8. In a vacuum cleaner hose attachment according to claim 6 wherein said first channels are diametrically disposed along said exterior surface.

9. In a vacuum cleaner hose attachment according to claim 6 wherein said spring contact members have free ends directed toward said base members defining anti-overstress means.

10. In a vacuum cleaner hose attachment according to claim 6 wherein said spring contact members on each base member comprise dual spring contact members.

References Cited

UNITED STATES PATENTS

1,106,974	8/1914	Rush	339—221(L)
3,320,607	5/1967	Rueger	339—221X
3,470,521	9/1969	Downey	339—16(R)X

MARVIN A. CHAMPION, Primary Examiner

P. A. CLIFFORD, Assistant Examiner

U.S. Cl. X.R.

174—47; 339—221, 258