Feb. 1, 1949. C. L. RICHARDS 2,460,534

ELECTRICAL CONDENSER

Filed Nov. 16, 1944

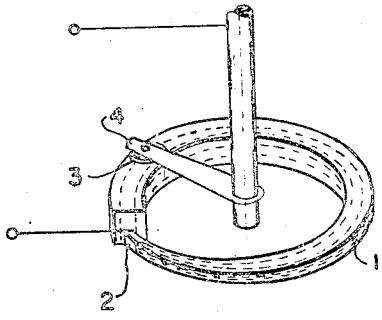

FIG. 1

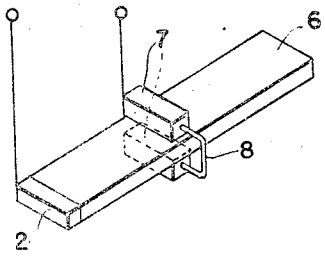

FIG. 2

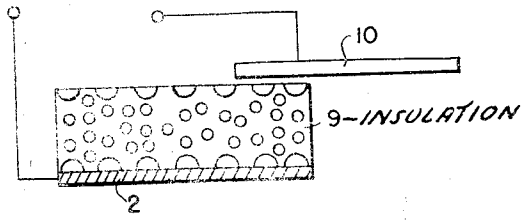

FIG. 3

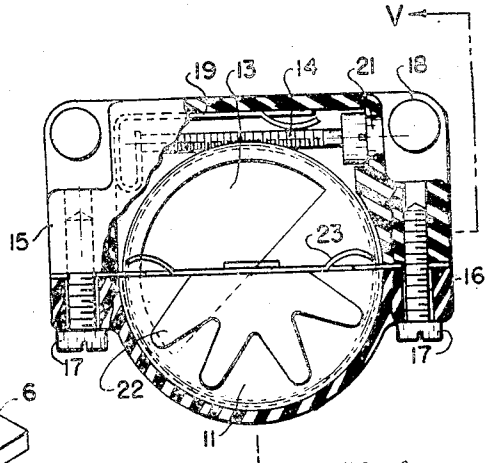

FIG. 4

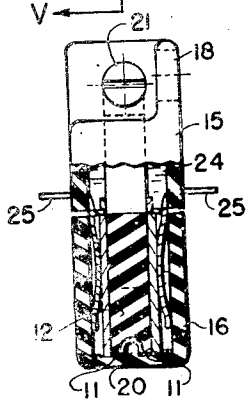

FIG. 5

INVENTOR
CLAUDE LANGDON RICHARDS
BY Lee B. Simon ATTORNEY.

Patented Feb. 1, 1949 2,460,534

UNITED STATES PATENT OFFICE

2,460,534

ELECTRICAL CONDENSER

Claude Langdon Richards, London, England, assignor to The Hartford National Bank and Trust Company, Hartford, Conn., as trustee

Application November 16, 1944, Serial No. 563,723
In Great Britain June 25, 1943

Section 1, Public Law 690, August 8, 1946
Patent expires June 25, 1963

4 Claims. (Cl. 175—41.5)

1

This invention relates to electrical condensers having a solid dielectric and has for its object to provide a simple solid dielectric condenser affording the possibility of varying the capacity in a very simple manner.

According to the present invention conducting particles and particles of the insulating material which is to constitute the dielectric are mixed together, a binder is added if necessary and the mixture is moulded or otherwise formed into the desired shape and subjected to the requisite treatment, such as heating, air-drying or the like, or sintering, in accordance with the nature of the materials in the mix, to produce a composite solid body to which the condenser connections are applied. The particle sizes of the insulating and conducting particles and their relative quantities are so chosen that the individual conducting particles are substantially all insulated from adjacent conducting particles by interposed insulating particles; suitably the particle sizes of the different components are of the same order of magnitude. Advantageously, the dielectric is a ceramic in which case the conducting particles are incorporated in the ceramic mix which is then subjected to the usual treatment for the production of a ceramic body. In general, the ceramic will act as a binder for the conductive particles, so that a solid body is obtained without the use of a separate binder.

The conductive particles may be carbon or a metal which is not affected by the process involved in the manufacture of the composite bodies. Examples of suitable dielectric materials are mica and titanium dioxide. Preferably the linear dimensions of the conductive particles are of the order of 40 microns. The quantities of conductive and insulating particles with particles of relatively uniform size are advantageously so chosen that

$$\frac{W_1}{W_2}=\frac{1}{2}\cdot\frac{D_1}{D_2}$$

W_1 being the weight of the conductive material in the mix.

W_2 the weight of the insulator, together with the binder, if any.

D_1 the specific gravity of the conductive material.

D_2 the specific gravity of the mixture of insulation plus binder.

2

For uniform materials of relatively the same density this condition is equivalent to the volume of dielectric material being twice that of conductive material.

If the composite body is in the form of a rod with one contact secured to one end and having a sliding contact arranged to slide along the length of the rod the effect would be that of a large number of condensers formed by the metal particles separated by the ceramic or other insulating particles. These individual minute condensers can be regarded as joined in series along the length of the rod and, therefore, the greater length of rod between the fixed and moving contacts, the smaller would be the capacity of the condenser. The rod need not, of course, be straight but could be moulded into a circular shape so that the sliding contact could be arranged so as to have a rotary motion similar to the well-known rotary resistances or potentiometers.

In general the shape of the capacitative material of the condenser should be so chosen that at any transverse section, i. e. a section in a plane at right angles to the path of the capacitative current, the ratio

$$\frac{(\text{Periphery})^2}{\text{Cross sectional area}}$$

is greater than 50 and preferably greater than 100, the periphery and area being measured in the same units. For a rectangular cross-section this is equivalent to the width being not less than 11 times the thickness, and preferably not less than 23 times the thickness. Moreover, when the periphery is polygonal the condenser connections or contacts should be arranged to make contact with the longest side of the polygon.

An alternative would be to mould the mixture into the form of a rectangular plate or rod and arrange one fixed contact to cover the entire area of one side of the plate or rod. This can be done, for example, by means of the well-known method of silvering used with ceramics.

A sliding contact in the form of a plate could then be arranged to make contact with more or less of the area of the opposite side of the plate or rod. The effect in this case would be that of a number of minute condensers joined in series between the fixed plate and the mov-

ing plate, but as the moving plate slides so as to cover more of the area, an increasing number of condensers in series would in fact be connected in parallel with each other between the two contacts so that the capacity would be increased.

By suitably shaping the moulded material in each of the above cases, a variable condenser having any desired law can be obtained.

Certain embodiments of the invention are shown in the accompanying semi-diagrammatic drawings, in which:

Fig. 1 is a perspective view of a construction in which the composite body is of substantially annular form

Fig. 2 is a perspective view of a construction in which the composite body is in the form of a straight strip-like rod

Fig. 3 is a side view of a construction in which one fixed contact covers the entire area of one side of a plate

Fig. 4 is a side view, in part in section, of a trimmer condenser according to the invention.

Fig. 5 is a view in part in section along the line V—V in Fig. 4.

In Fig. 1 the capacitative member is in the form of a rod 1 of progressively increasing cross-section and curved so that its centre line lies substantially in a circle. One end of the rod 1 is provided with a fixed contact member 2, the other contact being established by a contact member 3 slidable on the surface of the rod 1. The sliding contact member 3 is carried by a spring arm 4 which is secured to a shaft 5 concentric with, and extending at right angles to the plane of, the circle described by the centre line of the rod 1. Thus, by rotating the shaft 5 the capacity can be adjusted; the law according to which the capacity varies with the angular setting is determined by the divergence of the rod 1 in the longitudinal direction.

In Fig. 2 the capacitative material is in the form of a straight strip 6 having a fixed contact member 2 at one end. The second contact is afforded by a pair of contact members 7 on opposite sides of the strip 6. These contact members are electrically and mechanically united by a bridge 8, so that they are adjusted simultaneously and identically.

In Fig. 3 the plate 9 of capacitative material is provided with a fixed contact 2 covering the whole of one side; cooperating with the opposite side of the plate 9 is the second contact in the form of a plate 10 which is slidable in relation to the plate 9 and can be caused to cover all or part as desired of the surface, with corresponding variations in the capacity.

Figs. 4 and 5 show a trimmer condenser constructed in accordance with the invention. The mechanical construction illustrated in Figs. 4 and 5 takes the form of two semi-circular plates 11 forming the contact plates of the condenser. Between the plates 11 is the capacitative material in the form of a disc 12, with a semi-circular aperture 13. The periphery of the disc 12 is provided with gear teeth meshing with the screw thread 14.

The two contact plates 11, together with the capacitative disc 12 and the operative screw 14 are housed in a moulded container, constructed in two halves 15 and 16, joined together by means of the screws 17, and provided with fixing holes 18.

Rotation of the screw 14 rotates the capacitative disc 12, so that more or less of the air space

13 is enclosed between the contact plates 11, thereby altering the capacity of the condenser.

A shaped spring made from flat material such as spring brass 19 is arranged to exert spring pressure on the screw 14 so that the disc 12 is constrained to rotate on the raised part 20 of the moulding 16. The slotted head of the screw 14 is accessible for adjustment through the aperture 21.

The contact plates 11 are kept in close contact with the capacitative disc 12 by means of the formed springs 22, which at the same time restrict sideways movement of the plates 11 by the lips 23 on the springs 22 interacting with recesses 24 in the body 15. Extensions 25 of these springs 22 are used as contact terminals for the condenser.

I claim:

1. An electrical condenser comprising a disc-shaped composite body having a segmental aperture therein and comprising particles of insulating dielectric material and electrically conductive particles insulated from each other by interposed particles of said insulating dielectric material, a plurality of condenser electrodes in capacitative relationship with said body, said electrodes consisting of two semicircular metallic plates in contact with opposite surface portions of said body, and means to rotate said body relative to said plates to thereby vary the extent to which the non-apertured portion of the disc is interposed between said electrodes.

2. An electric condenser comprising a disc-shaped composite body having a segmental aperture therein and comprising ceramic particles and metallic particles electrically insulated from each other by said ceramic particles, two condenser electrodes in capacitative relationship with said body, said electrodes consisting of two semi-circular metallic plates in contact with opposite surface portions of said body, and means to rotate said body relative to said plates to thereby vary the extent to which the non-apertured portion of the disc is interposed between said electrodes.

3. An electrical condenser comprising a disc-shaped composite body having a segmental aperture therein and comprising ceramic particles and carbon particles insulated from each other by said ceramic particles, a plurality of condenser electrodes in capacitative relationship with said body, said electrodes consisting of two semi-circular metallic plates in contact with opposite surface portions of said body, and means to rotate said body relative to said plates to thereby vary the extent to which the non-apertured portion of the disc is interposed between the electrodes.

4. An electrical condenser comprising a disc-shaped composite body having a segmental aperture therein and comprising ceramic particles and particles of conducting material electrically insulated from each other by said ceramic particles, the relative proportions of the ceramic particles and the conducting particles being determined in accordance with the following equation:

$$\frac{W_1}{W_2}=\frac{\frac{1}{2}D_1}{D_2}$$

wherein W_1 is the weight of the conductive material in the body, W_2 is the weight of the ceramic particles in the body, D_1 is the specific gravity of the conductive material, and D_2 is the specific gravity of the ceramic particles, two condenser electrodes in capacitative relationship with said body, said electrodes consisting of two semi-circular metallic plates in contact with opposite sur-

face portions of said body, and means to rotate said body relative to said plates to thereby vary the extent to which the non-apertured portions of the disc is interposed between the electrodes.

CLAUDE LANGDON RICHARDS.

REFERENCES CITED

The following references are of record in the file of this patent:

UNITED STATES PATENTS

Number	Name	Date
602,227	Parvillee	Apr. 12, 1898
1,335,295	Papini	Mar. 30, 1920
1,394,055	White	Oct. 18, 1921
1,506,781	Shrader	Sept. 2, 1924
1,534,213	Hill	Apr. 21, 1925
1,589,008	Kirby	June 15, 1926
1,641,946	Murray	Sept. 6, 1927
1,763,554	Dubilier	June 10, 1930
1,781,033	Ruben	Nov. 11, 1930
1,909,248	Benkelman	May 16, 1933
2,305,355	Lips	Dec. 15, 1942

FOREIGN PATENTS

Number	Country	Date
121,006	Germany	May 30, 1901
587,771	Germany	Nov. 8, 1933