July 7, 1970 J. F. HOLT 3,519,927

SCANNING ANALYZER FOR DETERMINING CHARACTERISTICS OF AN IONIZED PLASMA

Filed Sept. 5, 1968 2 Sheets-Sheet 1

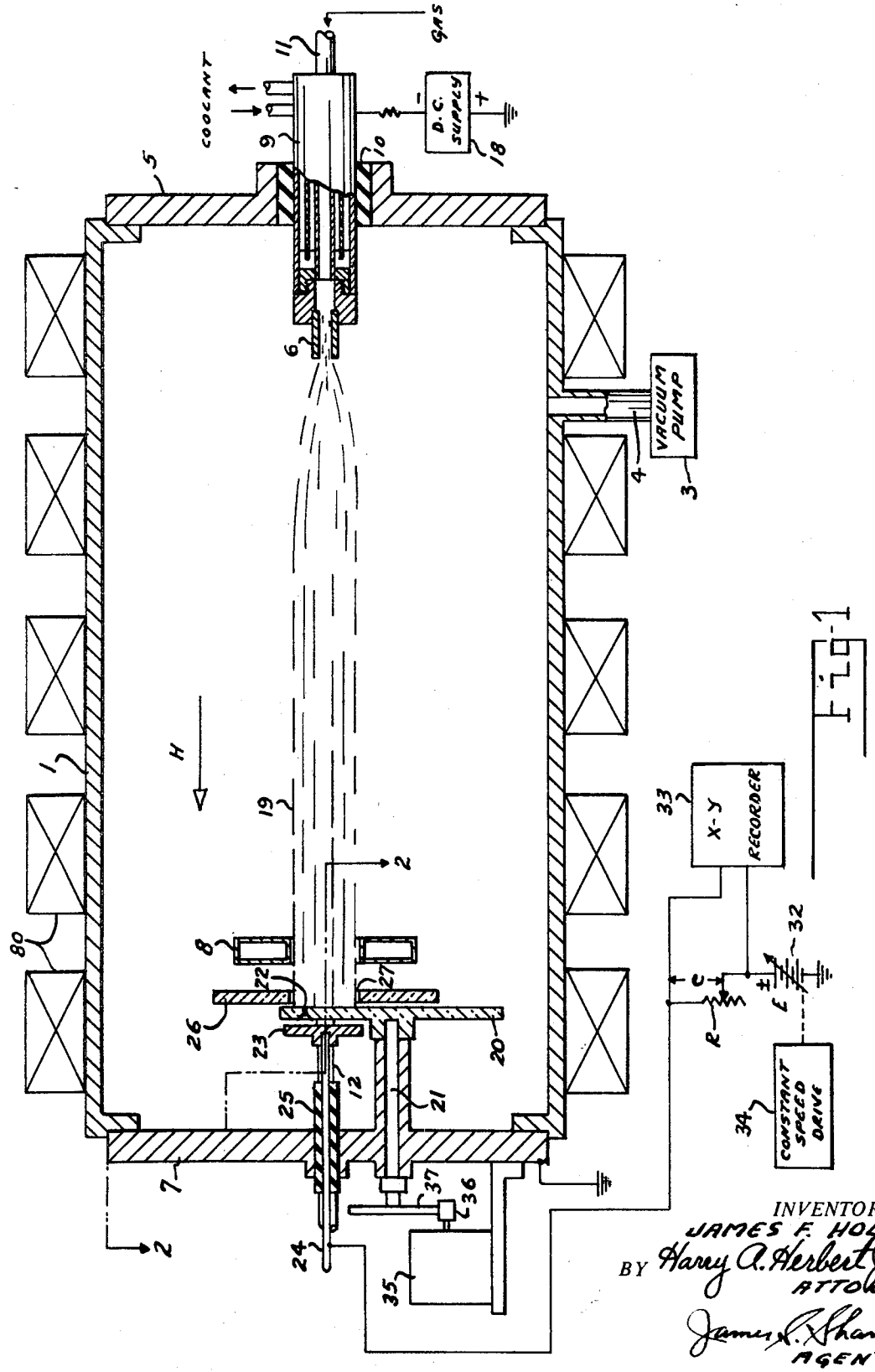

FIG. 1

INVENTOR.
JAMES F. HOLT
BY Harry A. Herbert Jr
ATTORNEY
James R. Shannon
AGENT

July 7, 1970 J. F. HOLT 3,519,927

SCANNING ANALYZER FOR DETERMINING CHARACTERISTICS OF AN IONIZED PLASMA

Filed Sept. 5, 1968 2 Sheets-Sheet 2

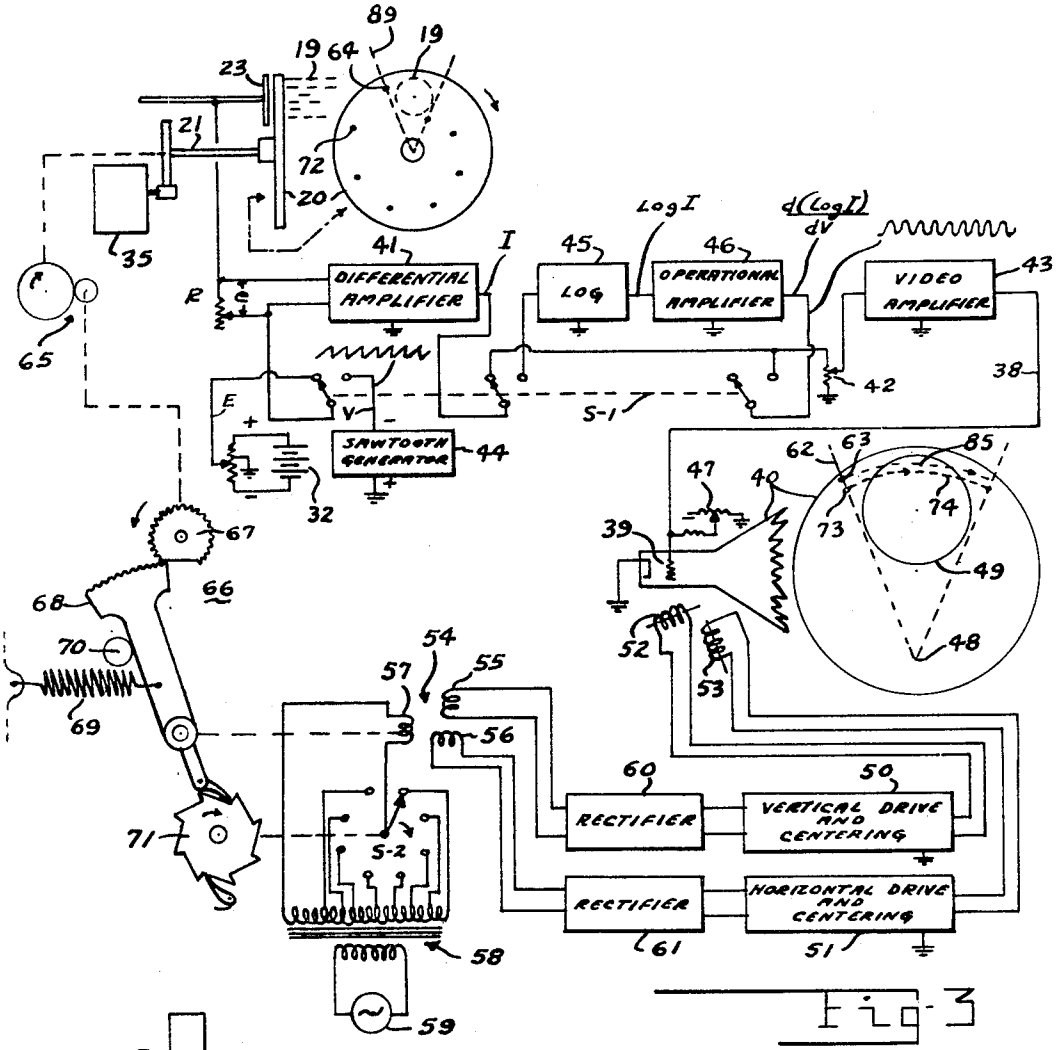

Fig-3

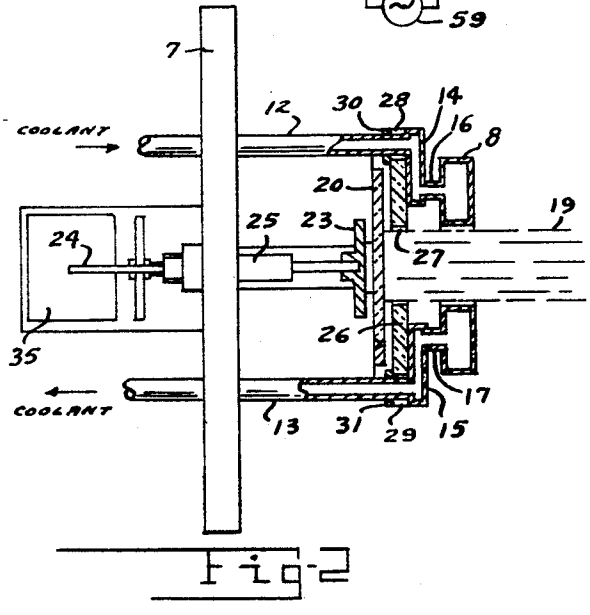

Fig-2

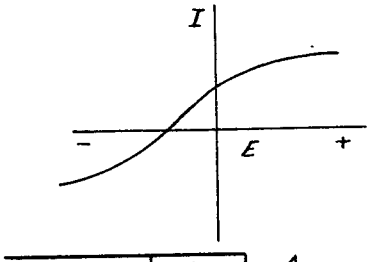

Fig-4

INVENTOR.
JAMES F. HOLT
BY Harry A. Herbert Jr
ATTORNEY
James S. Shannon
AGENT

United States Patent Office

3,519,927

Patented July 7, 1970

3,519,927

SCANNING ANALYZER FOR DETERMINING CHARACTERISTICS OF AN IONIZED PLASMA

James F. Holt, New Carlisle, Ohio, assignor to the United States of America as represented by the Secretary of the Air Force

Filed Sept. 5, 1968, Ser. No. 757,734
Int. Cl. G01r 31/22
U.S. Cl. 324—24 5 Claims

ABSTRACT OF THE DISCLOSURE

Apparatus for measuring and displaying plasma characteristics such as current density and electron temperature over the cross section of the plasma stream. A rotating apertured scanning disc intercepts the plasma stream and scans it along parallel lines. The plasma particles passing through the apertures of the scanning disc are received by a collector electrode producing a current flow in the electrode circuit which varies in accordance with the current density distribution in the plasma stream. By varying the collector voltage the $E—I$ characteristic for any point may be obtained, from which the electron temperature may be derived. Profiles of both current density and electron temperature are displayed in a gray scale representation on the screen of a kinescope the scanning beam of which is synchronized with the scanning disc.

BACKGROUND OF THE INVENTION

The invention relates to the study of gaseous electrical discharges or plasma and in particular to apparatus and techniques for measuring the characteristics of plasma streams. In the past the characteristics of gaseous discharges have been investigated by the use of conductive probes inserted into the particle stream, the probe current being analyzed to give the desired information. U.S. Pat. 3,207,982 to Rose is an example. Where profiles of a particle stream for particular parameters such as current density and electron temperature are desired it is difficult to obtain high resolution with probes since the elemental area of the plasma cross section being investigated at any one position of the probe is not well defined. Further, the relatively rapid scanning of the cross section of a plasma stream is not easily accomplished with a moving probe.

SUMMARY OF THE INVENTION

The purpose of this invention is to provide relatively simple means having good resolution for deriving and displaying a cross section or profile of a plasma stream with respect to a particular characteristic of the plasma such as current density or electron temperature. This is accomplished by intercepting the plasma stream with a rotating scanning disc having small apertures which scan one at a time across the plasma stream along adjacent parallel lines. The plasma particles that pass through the scanning apertures are received by a collector electrode. The resulting electrode current flowing through a load resistor produces a voltage proportional to the current density of the plasma stream at the point in its cross section where the scanning aperture is located at the instant. This voltage may be used to intensity modulate the beam of a kinescope, the sweep of which is synchronized with the scanning disc, to display the current density distribution in the plasma cross section, or, in a manner explained later, the collector potential may be continuously varied and the resistor voltage further processed to produce a signal representative of electron temperature which is then used to intensity modulate the kinescope beam to display the electron temperature distribution in the plasma cross section.

This technique provides good resolution because the scanning aperture provides well defined elemental areas in the plasma cross section, the resolution increasing of course as the size of the apertures is decreased.

BRIEF DESCRIPTION OF THE DRAWINGS

FIG. 1 is a sectional view illustrating a scanner in accordance with the invention installed in a plasma chamber for analyzing a gaseous discharge;

FIG. 2 is a partly sectional view taken at the planes indicated by line 2—2 in FIG. 1;

FIG. 3 is a cathode ray tube display system for the scanner of FIGS. 1 and 2; and

FIG. 4 illustrates collector current as a function of collector voltage.

DESCRIPTION OF THE PREFERRED EMBODIMENTS

Referring to FIGS. 1 and 3, **1** represents a sealed plasma chamber in which low pressure arcs may be formed and in which the plasma scanner for the study of such arcs in accordance with the invention is situated. The chamber is maintained at a suitably low pressure, for example $3–5\times10^{-4}$ torr, by vacuum pump **3** to which it is connected by a conduit **4**. The chamber is equipped with two removable circular end plates of metal, plate **5** at the right end of the chamber supporting the cathode of the arc circuit and plate **7** at the left end supporting the ring anode **8** of the arc circuit together with the components of the plasma scanner.

Cathode **6** is a hollow cylinder of a refractory metal supported in an electrically and thermally conductive manner by a liquid cooled cathode support **9** which in turn is supported in end plate **5** by an insulating sleeve **10**. A suitable gas, such as argon, is admitted to the hollow cathode through tube **11**.

The ring anode **8**, made of a suitable metal such as copper, is hollow for liquid cooling and is supported by metallic liquid coolant tubes **12** and **13** best seen in FIG. 2, which is a partly sectional view taken along the planes represented by section lines 2—2 of FIG. 1. These tubes have hollow metallic right angle extensions **14** and **15** from which the ring anode is supported by metallic tubes **16** and **17**. The coolant tubes and these extensions also serve to connect the ring anode to the grounded end plate **7**.

The cathode **6** is established at a negative potential relative to the anode **8** by means of direct current source **18**. The resulting electric field between the anode and cathode causes negatively charged particles at the cathode to be accelerated toward the anode to form the plasma stream **19**. An axial magnetic field H, established by direct current flow in fixed coils **80** surrounding the plasma chamber, opposes any divergence of the charged particles and confines them to a stream of cross section small enough to pass through the ring anode **8**.

The scanning disc **20**, made of an insulator capable of withstanding the plasma such as boron nitride, is supported by shaft **21** which in turn is rotatably supported by end plate **7**. The scanning disc is positioned to intercept the plasma stream **19** and is provided with a number of scanning apertures of the same size, such as aperture **22**, having equal angular spacings and uniformly decreasing radial distances from the center of rotation of the disc in the manner of early television scanning discs. The appearance of a disc with 8 apertures at 45° spacings is illustrated as a part of the system in FIG. 3. As indicated in this figure, the design must be such that the angle subtended at the center of rotation by the cross section of the impinging plasma stream **19**, shown dotted in FIG. 3, is less than the

angular spacing of the apertures in order that only one aperture will scan across the stream at any one time. With this arrangement the area is scanned along successive parallel arcuate paths. To completely scan the cross-sectional area, the sum of the aperture diameters should equal the diameter of the cross section. For example, referring to FIG. 3, a plasma stream **19** of one-inch diameter could be completely scanned in one revolution by a disc having 8 apertures, as shown, of ⅛ inch diameter. The size of the apertures is of course determined by the resolution desired and in turn dictates the number of apertures required and the minimum disc diameter.

The charged particles that pass through the apertures of the scanning disc are received by a conductive collector electrode **23** situated behind the disc and opposite the area of the disc that receives the plasma stream. This electrode is supported by a conductive rod **24** held in an insulating sleeve **25** in end plate **7**. Those particles that do not pass through an aperture are reflected from the scanning disc and eventually are collected by anode **8**. In order to prevent particles from passing around the edge of the scanning disc to collector electrode **23**, a baffle **26**, which may be made of the same material as the scanning disc and which has a central opening **27** to permit passage of the plasma stream, is positioned just in front of the scanning disc. As may be seen in FIG. 2, the baffle is supported by coolant tubes **12** and **13** which pass through edge notches **28** and **29**, collars **30** and **31** serving to hold the baffle against right angle extensions **14** and **15**.

The collector electrode **23** is connected through resistor R to a direct current source **32** which holds it at either a higher or a lower potential than that of anode **8** by an amount E, the relationship between collector current I and the voltage E being as shown in FIG. 4. The charged plasma particles passing through the scanning aperture and striking the electrode **23** cause a current to flow through R. If R is much smaller than the plasma resistance then the voltage *e* developed across R is proportional to the plasma current density at that point in its cross section at which the scanning aperture is located at the time. In the most elementary application of the scanner, the scanning disc may simply be rotated manually to position a scanning aperture at the poit in the plasma cross section it is desired to investigate. The plasma current density I at that point will then be shown by a suitable indicator **33**. Also, by varying E and noting the values of I for each value of E the *E—I* characteristic at that point may be derived. From this relationship, the electron temperature at the point may be derived using the theory of Langmuir as understood in the art and as will be explained more fully later in connection with FIG. 3. If E is varied linearly with time, as by a suitable constant speed drive **34**, and if indicator **33** is an X–Y recorder running at constant speed, the *E—I* characteristic will be drawn by the X–Y recorder. Again using an X–Y recorder running at constant speed, if E is held constant and scanning disc **20** is rotated at constant speed, as by a constant speed motor **35** coupled to shaft **21** through pinion **36** and gear **37**, a series of consecutive graphs will be drawn by the X–Y recorder representing the current density distributions along the paths of the scanning apertures across the cross section of the plasma stream.

Where it is desired to produce a gray scale representation of the current density distribution or the electron energy distribution over the plasma stream cross section, apparatus such as shown in FIG. 3 may be employed. Referring to this figure, when switch S–1 is actuated to the left a video signal proportional to current density is produced on line **38**, and when actuated to the right a video signal proportional to electron temperature is produced on this line. These signals are applied to the beam intensity control electrode **39** of cathode ray tube indicator **40** for controlling the intensity of the spot of light produced on its screen by its electron beam. With S–1 actuated to the left for the current density display, a constant voltage E is applied to collector electrode **23** through R and the output of differential amplifier **41** is coupled through contrast control **42** to the input of video amplifier **43**. Amplifier **41** amplifies the difference between the upper end of R and the voltage at its adjustable contact, i.e. the voltage drop across R, so that its output is proportional to the current densiy I, i.e. the total current in the elemenal area of the plasma cross section defined by the scanning aperture. With S–1 actuated to the right, a linearly varying sawtooth of voltage V, produced by sawtooth generator **44**, is applied through R to the collector electrode **23** and the output signal I of amplifier **41** is applied to a log converter **45** which produces an output signal Log I. This signal is applied to operational amplifier **46** which produces an output signal proportional to the derivative of its input Log I with respect to V or $d(\text{Log } I)/dV$. Actually circuit **46** produces the derivative with respect to time, but since V varies linearly with time it is also with respect to V. In accordance with the Langmuir theory, the peak value of this derivative is inversely proportional to electron temperature. This signal is applied through contrast control **42** to the input of video amplifier **43** and thence to control grid **39**, producing a spot of light on the screen of indicator **40** proportional in intensity to its peak value. The frequency of the voltage sawtooth V should be high enough relative to the scanning speed that several cycles occur before the scanning aperture has moved appreciably. The amplitude threshold of indicator **40** may be adjusted at potentiometer **47**.

In order to have the beam of cathode ray tube **40** scan across its screen along arcuate paths in the same manner that the apertures of scanning disc **20** move across the plasma cross section, a circular radially deflected sector sweep similar to that employed in a sectored PPI type of display is used. Preferably, the center of the circular sweep is displaced from the center of the screen to a point such as point **48**, or to a point outside the area of the screen if necessary, to provide a sufficiently large image area **49**. This displacement is accomplished in conventional manner by the centering circuits of the vertical and horizontal drive networks **50** and **51** which energize the vertical and horizontal deflection coils **52** and **53**.

Both the radial displacement of the beam of tube **40** from the center **48** and direction of this displacement are controlled by sine-cosine resolver **54** having stator windings **55** and **56**, 90° apart, and rotor winding **57**. Rotor winding **57** is energized from the secondary of transformer **58** through tap changing switch S–2, the primary of this transformer being energized from alternating current source **59**. The outputs of the stator windings **55** and **56** are rectified by rectifiers **60** and **61** to produce sweep inputs to the vertical and horizontal drive circuits **50** and **51**. The application of voltage to winding **57** radially displaces the beam of tube **40** from the center **48** by an amount proportional to the voltage. The direction of this displacement depends upon the angular relation of winding **57** to windings **55** and **56**, and rotates about center **48** when coil **57** is rotated. Therefore, by applying a constant voltage to winding **57** and rotating this winding in synchronism with scanning disc **20**, the beam of tube **40** may be made to trace a circular path across the screen that is centered on point **48** and corresponds exactly to the circular path of a scanning disc aperture across the plasma cross section. Thus, under the conditions illustrated in FIG. 3, in which winding **57** has maximum coupling to winding **55**, zero coupling to winding **56**, and maximum energization since S–2 is on the highest voltage tap, the beam of tube **40** has its maximum displacement from center **48** and the direction of the displacement is normal to the axis of vertical deflection coil **52** or along line **62**. Therefore, the beam rests at point **63** which corresponds to the position of the outermost aperture **64** of scanning disc **20** just prior to scanning across the plasma cross section. If coil **57** is now rotated clockwise in synchronism with disc **20** the

beam point **63** travels in an arcuate path **85** across the screen corresponding exactly to the arcuate path taken by aperture **64** across the plasma cross section.

In order for the beam to scan a similar arcuate path across the screen for each of the apertures of disc **20**, winding **57** is mechanically driven from shaft **21** of the scanning disc through gears **65** and a repeating sector drive **66**. The latter comprises an incomplete pinion **67** and a sector gear **68** which is directly coupled to the rotor winding **57** of the resolver. The ratio of gears **65** is such that pinion **67** rotates through 360° for a rotation of the scanning disc through the angle between apertures. In the illustrated case this angle is 45°, requiring a gear ratio of 8:1. Pinion **67** and sector **68** have the same ratio so that sector **68** and rotor winding **57** are driven at the same angular velocity as scanning disc **20**. The number of teeth omitted from pinion **67** is made such that sector **68** is released by the pinion after slightly less than 360° of rotation of the pinion from the pickup position in which it is illustrated. The purpose of the slightly early release is to allow time for the rapid counterrotation of the sector by spring **69** to its pickup position against stop **70** by the time the pinion has completed exactly 360° of rotation.

The above-described cycle of operation of sector drive **66** is repeated during each 45° of rotation of the scanning disc, each cycle of operation starting as each aperture of the disc passes over the angular position indicated by line **89**. The quick return of sector **68** to its start position against stop **70** at the end of each cycle advances tap changing switch S–2 clockwise by one position through ratchet wheel **71**. Therefore, starting from the position illustrated in FIG. 3, rotation of scanning disc **20** clockwise through 45° causes aperture **64** to scan along a circular path across the plasma cross section and the beam of tube **40** to move in synchronism with the aperture along a circular path **85** across the screen from point **63**. Similarly, for the next 45° of rotation of disc **20**, aperture **72** moves from position **89** across the plasma stream and the beam of tube **40** similarly moves from point **73** along a circular path **74** of slightly shorter radius due to the fact that S–2 has now been stepped to the next lower voltage tap. This process continues for each succeeding scanning aperture and repeats for each 360° of rotation of the scanning disc **20**.

The operation of the scanning system is independent of the speed of the scanning disc provided this speed is below the limits imposed by the masses of the moving mechanical parts. High scanning speeds are not ordinarily required in a plasma scanner. The scanner shown will easily operate at 60 r.p.m. For slower scanning speeds a long persistent phosphor should be used. For the slowest scanning speeds, or for a single rotation of the scanning disc, a storage type of cathode ray tube may be used.

I claim:

1. Apparatus for analyzing plasma streams comprising: plasma stream producing means including a cathode where the plasma stream originates, a ring anode having an opening through which the plasma stream passes, and a source of direct potential having its positive terminal connected to said anode and its negative terminal to said cathode; a scanning disc, made of a plasma resistant insulating material, positioned to receive said plasma stream after passage through said ring anode, said scanning disc being rotatable about an axis parallel to the axis of said plasma stream and lying outside said stream and having a series of scanning apertures at equal angular spacings and uniformly decreasing distances from the center of rotation of the disc for scanning along parallel arcuate lines across the cross section of said plasma stream; a collector electrode positioned behind said scanning disc opposite the area on which said plasma stream impinges and coextensive with said area for receiving the plasma particles passing through the apertures of said disc; a resistor having a value much lower than the resistance of said plasma stream and a second source of direct potential connected in series between said collector electrode and said anode; and an indicator connected across said resistor.

2. Apparatus as claimed in claim **1** in which a baffle plate made of a plasma resistant insulating material is situated between said scanning disc and said ring anode, said plate having an opening concentric with and commensurate with the opening in said ring anode.

3. Apparatus as claimed in claim **2** in which means are provided for immersing said plasma stream in a constant magnetic field parallel to the stream axis.

4. Apparatus as claimed in claim **1** in which said indicator comprises a cathode ray tube, means for controlling the intensity of the beam of said tube in proportion to the voltage drop across said resistor, and means coupled to said scanning disc for producing a sweep of the beam of said tube across its screen that is synchronized with the scanning of said scanning disc.

5. Apparatus as claimed in claim **1** in which said second source of direct potential produces a linear sawtooth of voltage having a frequency much higher than the rotational frequency of said scanning disc and in which said indicator comprises a cathode ray tube, means for deriving a signal proportional to the logarithm of the voltage drop across said resistor, means for producing from said logarithmic signal a signal proportional to the first derivative of said logarithmic signal relative to the voltage of said second source, means for controlling the intensity of the beam of said tube in accordance with the last-named signal, and means coupled to said scanning disc for producing a sweep of the beam of said tube across its screen that is synchronized with the scanning of said scanning disc.

References Cited

UNITED STATES PATENTS

3,316,485	4/1967	La Rue et al.	324—24
3,437,915	4/1969	Russell	324—24

RUDOLPH V. ROLINEC, Primary Examiner

E. L. STOLARUN, Assistant Examiner

U.S. Cl. X.R.

324—71, 72; 250—49.5