Mar. 5, 1929. H. F. SCRUBY 1,703,963

MEANS FOR RAISING OIL FROM WELLS

Filed June 1, 1925 2 Sheets-Sheet 1

Fig. 1.

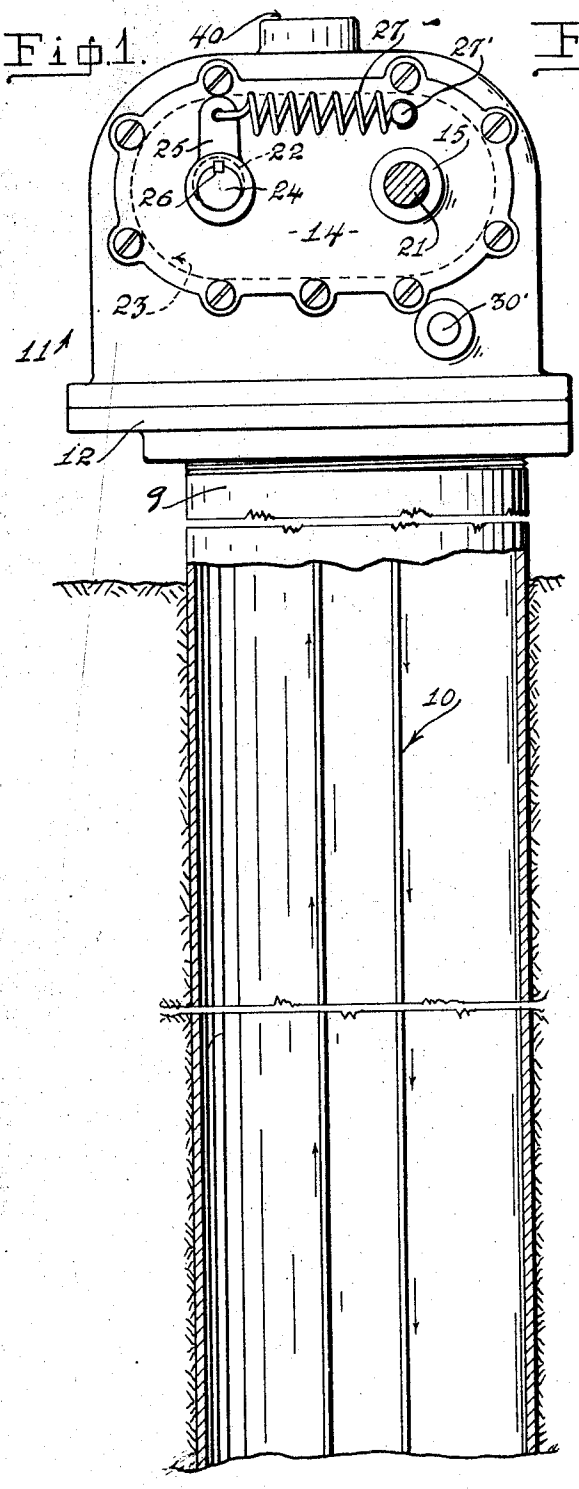

Fig. 3.

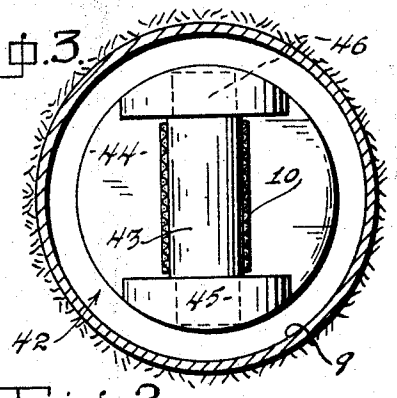

Fig. 2.

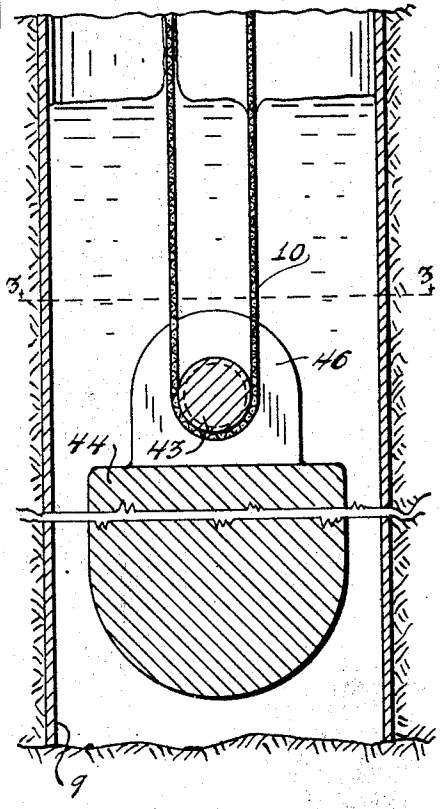

Horace F. Scruby,
INVENTOR.

BY J. W. Shelley
ATTORNEY.

Mar. 5, 1929. H. F. SCRUBY 1,703,963

MEANS FOR RAISING OIL FROM WELLS

Filed June 1, 1925 2 Sheets-Sheet 2

Fig. 4.

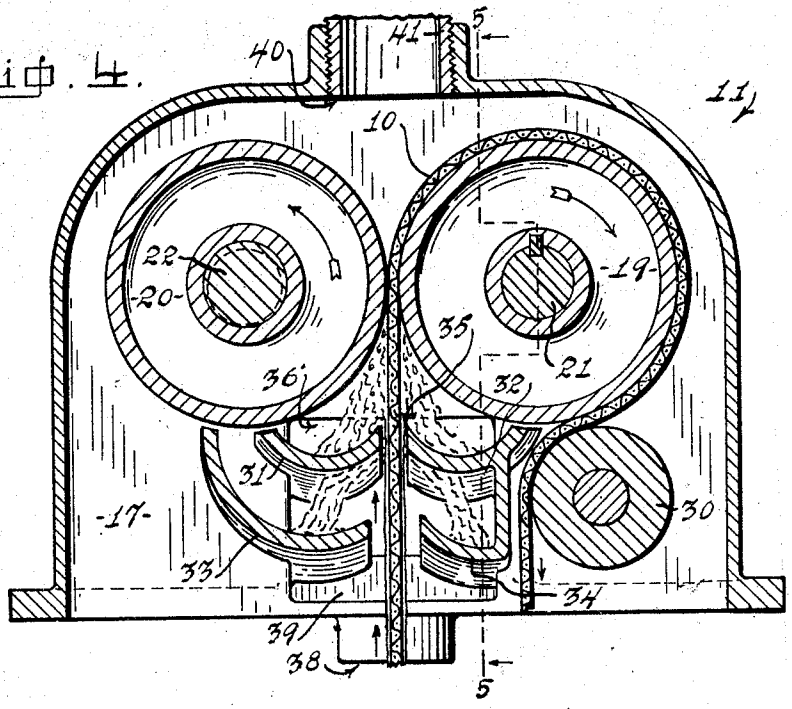

Fig. 5.

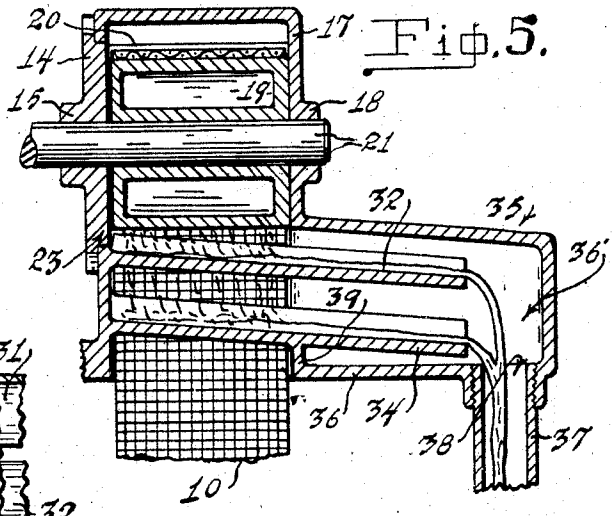

Fig. 6.

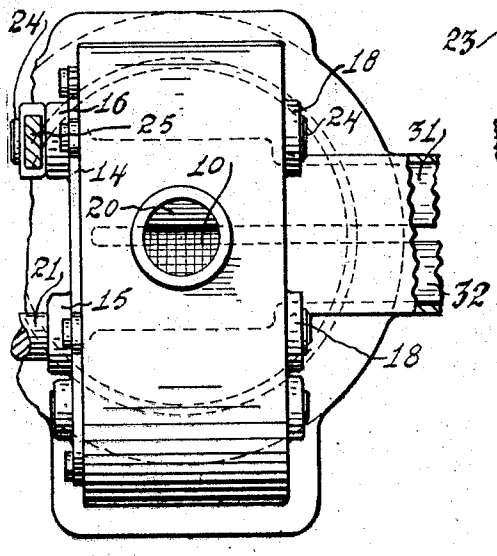

Horace F. Scruby.
INVENTOR.

BY J. W. Sheely

ATTORNEY.

Patented Mar. 5, 1929. 1,703,963

UNITED STATES PATENT OFFICE.

HORACE F. SCRUBY, OF BEVERLY, CALIFORNIA.

MEANS FOR RAISING OIL FROM WELLS.

Application filed June 1, 1925. Serial No. 34,243.

The present invention relates to apparatus for lifting oil from wells, particularly deep wells, and has for its principal object the provision of simple, dependable and efficient apparatus for continuously raising oil from such wells.

Another object of the invention is to dispense with tubing, sucker rods, pump casings, working barrels and other relatively working parts, particularly inasmuch as the silt carried by the oil greatly multiplies the difficulties of raising oil with deep well pumps, and shortens the lives of such pumps.

Another object of the invention is to dispense with the cumbersome equipment necessary for reciprocating long strings of rods, and to reduce friction and other power losses incident to the operation of submerged reciprocal pumps.

Another object of the invention is to provide oil raising means which will not abrade the well casing and which is not itself readily worn or abraded by sand.

Another object of the invention is to provide an oil raising apparatus, which in the presence of oil and free water, may be caused to raise the oil in preference to the water.

Another and important object of the invention is to provide oil raising apparatus which requires very little attention, and in which ordinary repairs, adjustments and changes which may be required to be made can be accomplished by one man rather than an entire crew, such as is required in the case of deep well pumping equipment.

Still other objects and advantages of my invention will appear hereinafter and will be better understood because of the order of their occurrence.

I have illustrated my invention by the accompanying drawings, in which

Figure 1 is a view in vertical section of the upper portion of a well, showing my invention applied thereto.

Figure 2 is a view in section of the lower part of said well.

Figure 3 is a view in section seen on a line 3—3 of Fig. 2.

Figure 4 is a vertical section, on a larger scale, of the special casing head shown in Fig. 1.

Figure 5 is a view in section, on the same scale as Fig. 1, seen on a line 5—5 of Fig. 4 looking in the direction indicated by the arrows.

Figure 6 is a plan view of the casing head.

In carrying out my invention I employ an endless belt 10, of sufficient length to reach from above ground to points below normal fluid level of a well. The belt may be of any suitable material, shape and construction, and for all practical intents and purposes of the invention said belt may be, and should preferably be, non-hygroscopic. In other words, the belt may be of fabric, metal or any other substantially solid material; fluid absorbing material being necessarily of low tensile strength and apt to be subject to such elongation at some points that contained fluid would be wrung thereform before reaching the surface. Another important consideration is that the belt be relatively wide, inasmuch as a wide and comparatively thin belt presents more exposed surface for each pound of material contained. For many practical reasons a closely woven fabric belt seems best suited, the fabric being selected because of its strength and flexibility combined with comparatively light weight, although a flexible steel belt may be used.

It is a well known fact that crude oil will adhere to almost any kind of a surface for a long time before draining off, and it is this phenomenon that I take advantage of in carrying out my invention. The crude oil usually encountered will adhere in a deep film on polished steel as well as fabric, and therefore, fabric is not the only material which may be employed.

A casing head 11 is provided with a bottom flange 12, whereby it is secured to the top of the casing. The casing may be carried to any suitable elevation above the ground to give increased head. The casing head is provided with a rear removable plate 14 having bearings 15 and 16 respectively. Side wall 17 of the casing carries similar bearings, such as 18. Within the casing there is housed a drive pulley 19 and an idler pulley 20. The drive pulley is driven by a power shaft 21 which runs through bearing 15 and terminates in a corresponding bearing 18. The idler pulley is revolubly mounted on an oscillatable shaft 22, which is trunnioned at one end in bearing 16; the other end being trunnioned in a corresponding one of the bearings 18. The plate covers an opening 23, large enough for both pulleys to be drawn through together with the shafts. The ends 24, 24, of the shaft 22 are turned to a smaller diameter than the center of the shaft and are eccentric thereto. To the outer protruding part of one end, an

arm 25 is keyed, as at 26. Said arm is provided with a tension spring 27 which is attached to the plate, as at 27'. Said spring tends continually to turn the shaft, with the result that the idler pulley is held yieldably adjacent or against the drive pulley. The belt is run between the two pulleys, as shown, and thereby the space between the two pulleys is just equal to the thickness of the belt at all times. The spring is not strong enough to compress or "wring" the belt, and in fact the type of belt best suited for the purpose is not capable of being compressed to any noticeable degree.

Below the drive pulley, and slightly to one side thereof, there is provided a roller 30 arranged to direct the down-traveling side of the belt so that it is close to the up-going side. In fact the respective parts of the belt should be spaced within the casing so that they do not tend to touch each other or adjacent portions of the casing.

Below the pulleys there are arranged a plurality of arcuate troughs, such as 31, 32, 33 and 34, respectively. Troughs 31 and 32 are uppermost and arranged one on each side of the belt and quite close thereto. The space 35 existing between the belt and a trough should be slightly greater than the depth of the oil film carried by the belt. Troughs 33 and 34 are below the other troughs and are spaced apart a greater distance. The lower troughs are provided for the purpose of catching the oil which may overflow the upper troughs and follow the under surfaces thereof before falling. In the embodiment illustrated said troughs are shown as being an integral part of the rear wall of the casing head. That portion of each upper trough which is adjacent the belt is disposed at an acute angle to the belt so that oil reaching the lower surfaces of said troughs will adhere and flow away from the belt.

The troughs are inclined forwardly and downwardly and extend below the pulleys and forwardly into an arched housing 35, which is a continuation of the casing head. Said housing is provided with a lower wall 36 providing an enclosed fluid collecting space 36', which is drained by a flow line pipe 37 through an opening 38. The troughs are so arranged that oil flowing from the troughs will fall directly into the pipe, a partitioning wall 39 being provided to prevent the oil from flowing back down the casing. At the top of the casing an outlet 40 is provided so that gas, raised with the oil, may be drawn off through a pipe 41.

In installing my improved pumping apparatus, the casing head is attached to the casing with the endless belt arranged between the two pulleys, as shown. The lower end of the continuous belt is provided with a weighted pulley 43, which serves to keep the belt sufficiently straight. The belt is of sufficient length to extend to points below the normal oil level, although it is a peculiarity of this apparatus that its capacity does not depend in any way on the depth of which it is submerged. In fact, if the lower part of the belt were submerged only a few inches, as much oil would be raised as when it is submerged several feet.

As to the operation of the apparatus, it will be apparent that clockwise rotation of the drive pulley will cause the belt to move in the direction indicated by the arrows. The pulley may be driven by a high speed electric motor and the belt may be caused to travel at any reasonable belt speed. As the upwardly traveling part of the belt rises from the oil it will carry with it a comparatively heavy film of the viscous fluid. The fluid is held to the belt quite entirely by adhesion. Such a film of oil will adhere to a smooth surface for a long interval of time. Even should the belt take an entire minute to travel from the bottom of the well to the top, the major portion of the fluid raised from the surface of the oil would be carried to the top.

The comparatively broad belt has a large exposed surface and a usual film of oil on a belt traveling at not uncommon belt speeds will raise several hundred barrels of oil in twenty four hours. The belt will normally travel quite freely in the well, the friction of moving parts is slight and therefore the energy required to drive the apparatus is very little more than the actual foot pounds required to lift the oil. Coarse sand or silt, and free water is not readily lifted by the belt, and the continued lubrication of the belt by the oil which it lifts will reduce weakening and abrasion of the belt to a practical minimum.

As the belt passes between the two spaced pulleys, the oil cannot follow, and as a consequence it is displaced and drawn back by gravity into the upper set of troughs. Any overflow is caught by the lower troughs and eventually all the oil raised gravitates into the flow pipe opening. Should any part of the film of oil on the belt be thicker than the clearance space 35, the excess oil will be brushed off by the adjacent edges of the upper set of troughs. Such oil will flow downwardly and away from the belt and fall into the lower troughs from whence it will be carried away without again touching the belt. Thus the belt is thoroughly cleansed of adhering oil without becoming abraded by contact with the edges of the trough.

The housing 11 serves as a casing head which completely encloses the upper end of the casing except for the small outlets 38 and 40. Thus all gas rising in the well may be kept under pressure and caused to seek escape through the gas outlet 40. Accordingly, any oil flowing through outlet 37 has the gas pressure of the well behind it to force

it through the pipe and lift it to a storage tank or the like (not shown). The enclosed mechanism within the housing 11 acts as an efficient gas separator, separating the gas and oil and still keeping the gas pressure as high as desired.

While I have shown and described a specific apparatus for carrying out my invention I do not limit myself thereto, and may alter the construction as I desire without enlarging the scope of my invention.

I claim:

1. In an apparatus of the class described, a pair of spaced pulleys, a belt running closely between said pulleys, a pair of upper troughs below said pulleys; one trough to either side of the belt and each having an edge closely disposed to said belt; said upper troughs having under surfaces sloping away from said belt at an acute angle, and other troughs below said upper troughs; said other troughs spaced away from said belt a greater distance.

2. In combination with an oil well having an upper open and casing, a housing completely enclosing the upper end of said casing except for an upper gas outlet and a lower oil outlet, a pulley revoluble in said housing, an endless belt running over said pulley and depending into the well to a point below the fluid level thereof, means for causing the oil to gravitate from said belt, and means for conveying oil from said means to said oil outlet.

HORACE F. SCRUBY.