(No Model.)

M. H. WHITE.

WATER WHEEL.

No. 590,178. Patented Sept. 14, 1897.

Fig. 1.

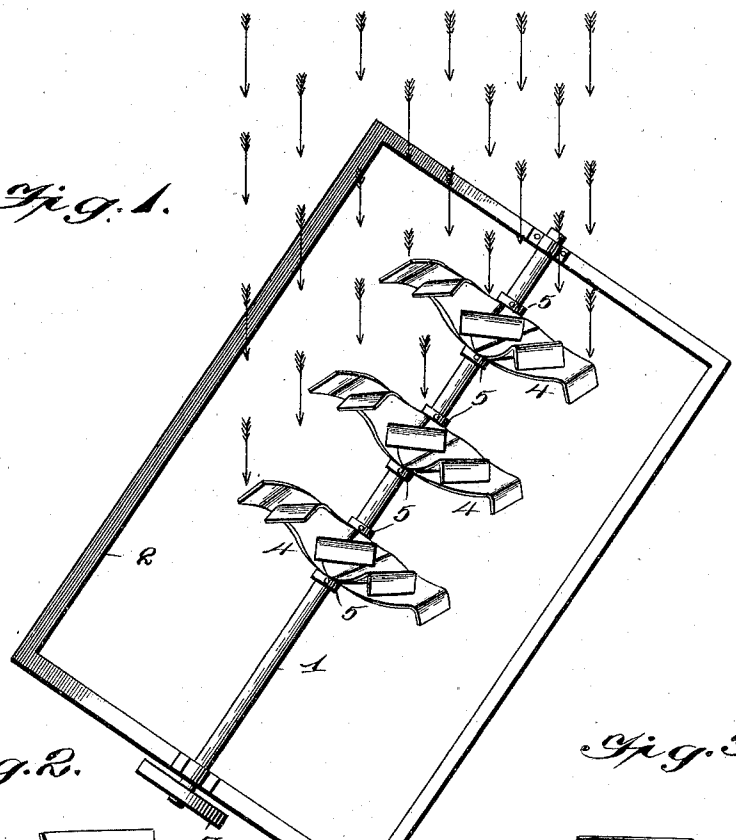

Fig. 2.

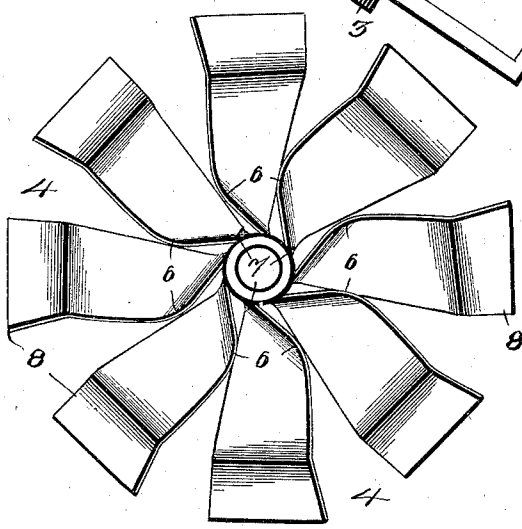

Fig. 3.

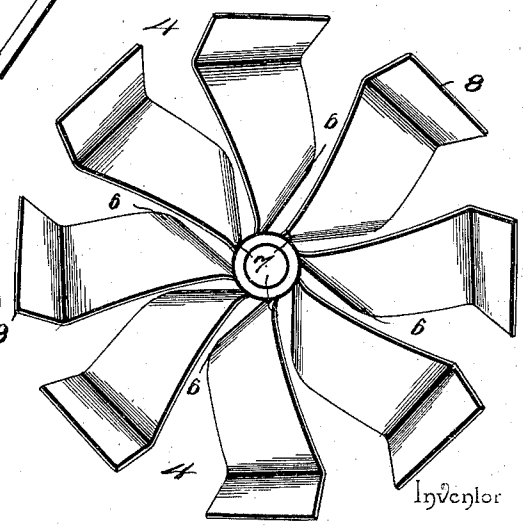

Witnesses

W. J. Koerth.

[illegible]

Inventor

Moses H. White,

By his Attorneys.

C. A. Snow & Co.

THE NORRIS PETERS CO., PHOTO-LITHO., WASHINGTON, D. C.

UNITED STATES PATENT OFFICE.

MOSES H. WHITE, OF WENATCHEE, WASHINGTON, ASSIGNOR OF ONE-THIRD TO GEORGE T. RICHARDSON, OF SAME PLACE.

WATER-WHEEL.

SPECIFICATION forming part of Letters Patent No. 590,178, dated September 14, 1897.

Application filed August 20, 1896. Serial No. 603,396. (No model.)

To all whom it may concern:

Be it known that I, MOSES H. WHITE, a citizen of the United States, residing at Wenatchee, in the county of Kittitas and State of Washington, have invented a new and useful Water-Wheel, of which the following is a specification.

My invention relates to current water-wheels of that class in which the wheel is adapted to be submerged in mid-stream; and the object in view is to construct a winged or blade wheel to concentrate the force of the water contiguous to the axis of the wheel with the direction of the current at an angle to said axis, whereby a speed of rotation in excess of that of the current may be attained, and, furthermore, to construct the wings or blades of such a shape as to deflect that portion of the fluid which strikes the terminal thereof to prevent eddies and back pressure.

Further objects and advantages of this invention will appear in the following description, and the novel features thereof will be particularly pointed out in the appended claims.

In the drawings, Figure 1 is a plan view of a battery or series of water-wheels embodying my invention attached to a common spindle or shaft and indicating a crank-wheel or disk also attached to and receiving motion directly from said spindle for operating a pump or equivalent mechanism, the direction of the current or the application of fluid-pressure to the wheels being indicated by arrows. Fig. 2 is a front view of the improved wheel. Fig. 3 is a rear view of the same.

Similar numerals of reference indicate corresponding parts in all the figures of the drawings.

1 designates a shaft or spindle, to which may be applied a plurality of current-wheels constructed in accordance with my invention, said shaft or spindle being arranged at an inclination to the direction of the current of water, which is indicated by the arrows in Fig. 1, and attached to the extremity of the shaft, which may be mounted in any suitable framework, such as that indicated at 2, is a crank-wheel 3 or its equivalent, from which motion may be communicated to the mechanism to be operated.

Each wheel comprises a plurality of wings or blades 4, secured at their inner ends to the shaft between spaced collars 5 and each having a forwardly-concaved body portion, which is rearwardly contracted or funnel-shaped to concentrate the force of the water as it moves rearwardly contiguous to the axis of the wheel. The inner ends of the blades, which are cross-sectionally flat in construction, are arranged parallel with the axis of the wheel, and while the front edges of the blades are curved or bowed laterally, as shown at 6, approximately in a common transverse plane throughout, the rear edges thereof, after being bent abruptly to form reduced bows 7, are inclined forwardly to a point approximately in the transverse plane of the front edges of the blades, whereby the extremities of the blades are deflected from an axial plane and occupy a position between an axial and a transverse plane. The main portions of the rear edges of the blades are approximately straight, and hence water which is received upon the face of a blade by the bowed front edge thereof is concentrated inwardly as it passes rearwardly, whereby the rotating force of the water is brought toward the axis of the wheel. Inasmuch as the axis of the wheel is arranged at an inclination to the direction of the current it will be seen that the force applied thereto will be cumulative, whereby the wheel is adapted to receive motion at a speed in excess of that of the water. The reason for this action is that the direction of movement of each blade of a wheel is across the current, the concave face of the blade which is presented to the thrust of the current being at an inclination to the direction of movement of the liquid, whereby said concave face is continuously exposed to the pressure of different particles, thus giving a cumulative action similar to that derived by a sail when exposed to wind striking the surface thereof in a slanting or glancing direction. The effect of this action is enhanced furthermore by the rearwardly-contracted or semi-funnel shape of the concave or operating surface of each blade, inasmuch as said shape causes the concentration of the glancing or lateral pressure at a point contiguous to the axis of rotation, whereby a less forward motion of

the operating fluid is necessary to produce the same lateral motion of the blade.

In order to prevent eddies and back pressure in rear of the blades or wings, the extremities of the latter are deflected rearwardly, as shown at 8, to form ears, which have the effect of deflecting that portion of the water which strikes the blades near their extremities and by throwing it laterally destroys the effect thereof upon the wheel.

It is desirable in all wheels of the class to which my invention appertains, wherein the blades at only one side of the wheel are exposed to the direct operating impulse of the actuating fluid, to cause the blades which are at the opposite side of the wheel and hence are gradually approaching the operative position to oppose as little of their surfaces to the action of the fluid as possible; and it is further desirable when necessary to expose a portion of the surface at the inoperative side of the wheel to oppose approximately equal portions of both surfaces of the same blade or to oppose counterbalancing portions of the surfaces of contiguous blades, whereby the effect produced upon one side of a blade is neutralized by that applied to the opposite side or to the opposite surface. Hence I have adopted the above-described semi funnel shape for the operative or impact face of each blade; but in practice I found that this shape caused an almost direct presentation of the terminal edge of each blade to the approaching water as said blade came into its operative position or neared the operative side of the wheel. This terminal presentation of the blade had a tendency to expose the rear or inoperative face of the blade to the pressure, especially in view of the semi funnel or concentrating construction of the front or operative face. In order to obviate this pressure upon the rear face of the blade, I found it expedient to deflect or bend the extremity of the blade outwardly from the axis of rotation upon a line approximately parallel with said terminal edge, whereby as a blade approached the operative position this deflected portion thereof presented a flat surface approximately perpendicular to the direction of movement of the current, and while the action of the water upon this surface does not add materially to the impulse imparted to the wheel, but at least prevents back pressure upon the blade having said deflected portion and also prevents a "wedging" action due to the expansive or deflected force of the water upon the next blade. Said flat surface of the deflected terminal portion of the blade does add somewhat to the operative surface of the blade for the reason that the rotation of the wheel causes said surface to recede slightly or move in the direction of the current or in a diagonal path, which gradually recedes as the blade approaches the inoperative side of the wheel.

Various changes in the form, proportion, and the minor details of construction may be resorted to without departing from the spirit or sacrificing any of the advantages of this invention.

Having described my invention, what I claim is—

1. A water-wheel having its blades arranged at their inner ends parallel with the axis of rotation and twisted toward their outer ends to dispose the terminal edges diagonally to the axis of rotation, the intermediate portion of each blade being concaved on its operative face with the concavity contracted rearwardly to form a semi funnel-shaped surface, substantially as specified.

2. A water-wheel having its blades arranged at their inner ends parallel with the axis of rotation and twisted to dispose their outer terminal edges diagonally with relation to the axis of rotation, the intermediate portion of each blade having laterally-concaved front edges and forwardly-inclined rear edges, whereby the concavity of the blade is contracted rearwardly and inwardly, or toward the axis of the wheel, to form a semi funnel-shaped operative face, substantially as specified.

3. A water-wheel having its axis arranged diagonally with relation to the direction of an operating-current and provided with blades having rearwardly-contracted or semi funnel-shaped operative faces, the direction of contraction inclining inwardly or toward the axis of rotation, substantially as specified.

4. A water-wheel having cross-sectionally-flat blades or wings arranged at their inner ends parallel with the axis of rotation, having their body portions twisted to dispose their parallel edges diagonally with relation to the axis of rotation, having their operative faces concaved to form rearwardly-contracted or semi funnel-shaped surfaces, and having their extremities deflected rearwardly upon lines approximately parallel with their terminal edges to form flat surfaces adapted, when the blades are in operative position, to be opposed approximately perpendicularly to the direction of the application of pressure thereto, substantially as specified.

In testimony that I claim the foregoing as my own I have hereto affixed my signature in the presence of two witnesses.

MOSES H. WHITE.

Witnesses:
KIRK WHITED,
A. H. BOSWORTH.