(No Model.) 3 Sheets—Sheet 1.

J. L. BUTLER.

SULKY CULTIVATOR.

No. 456,551. Patented July 28, 1891.

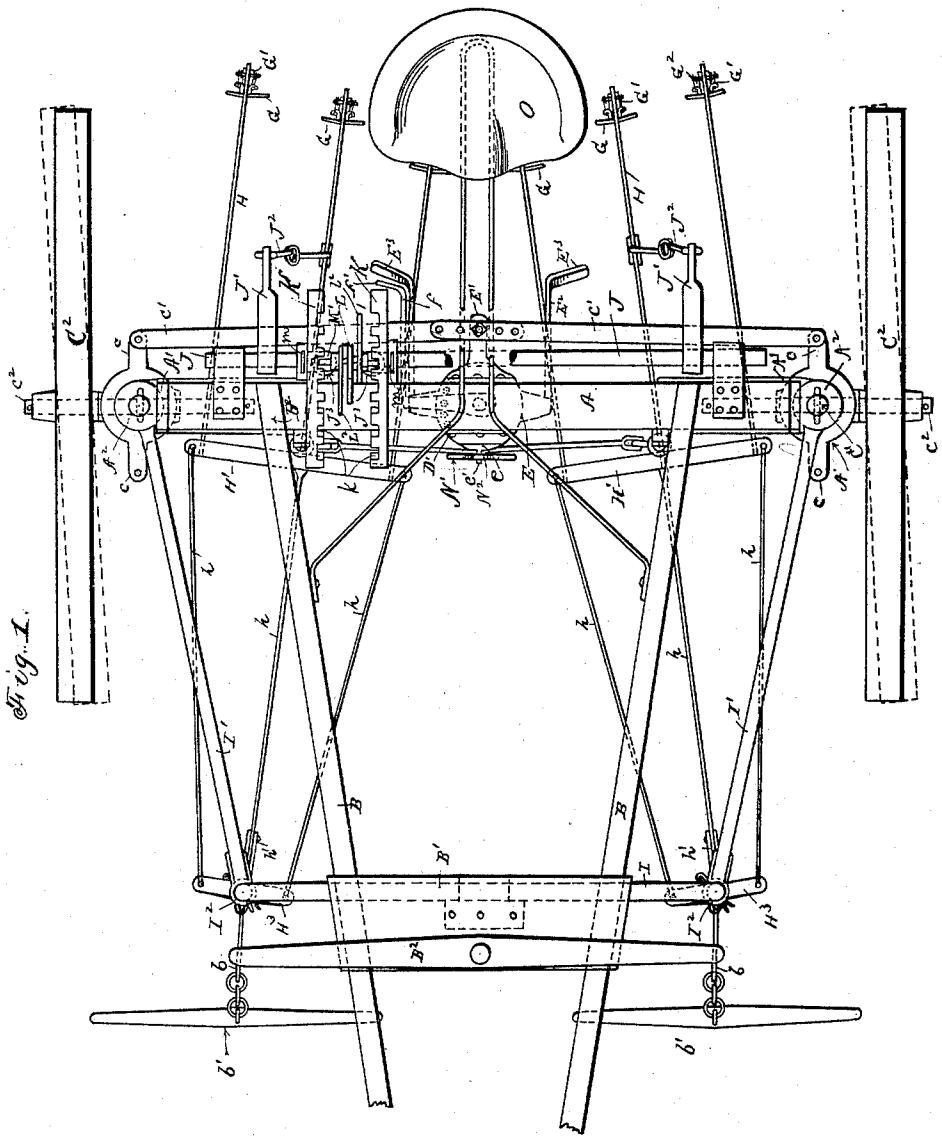

Fig. 1.

Witnesses.
W. R. Edelen,
C. A. Snow & Co.

Inventor
James L. Butler.
By Leggett & Leggett
Attys.

THE NORRIS PETERS CO., PHOTO-LITHO., WASHINGTON, D. C.

(No Model.) 3 Sheets—Sheet 2.

J. L. BUTLER.

SULKY CULTIVATOR.

No. 456,551. Patented July 28, 1891.

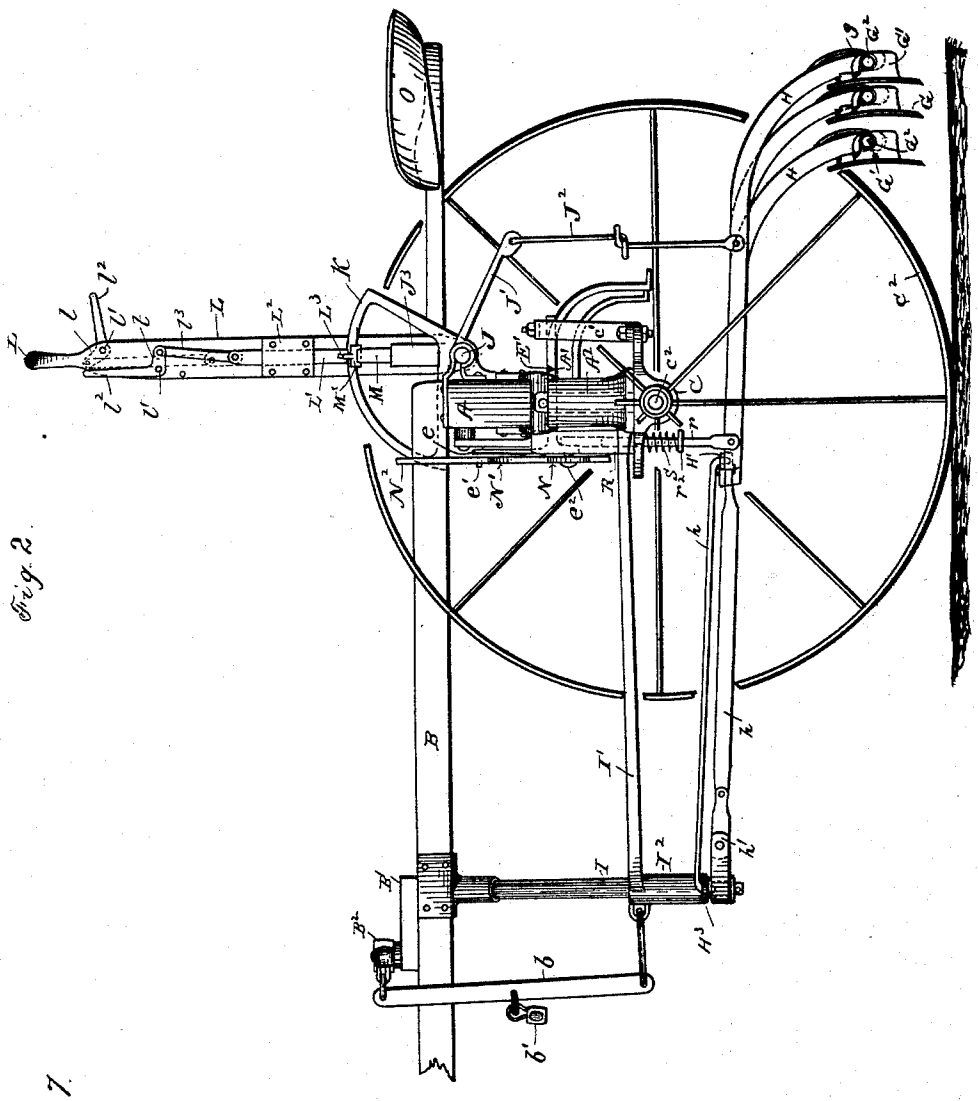

Fig. 2.

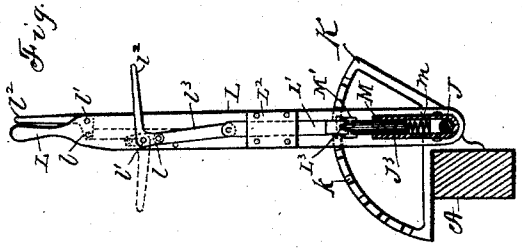

Fig. 1.

Witnesses.
W. R. Edelin,
C. F. Dorsey

Inventor.
James L. Butler.
By Liggett & Liggett
Atty's

THE NORRIS PETERS CO., PHOTO-LITHO., WASHINGTON, D. C.

(No Model.) 3 Sheets—Sheet 3.

J. L. BUTLER.

SULKY CULTIVATOR.

No. 456,551. Patented July 28, 1891.

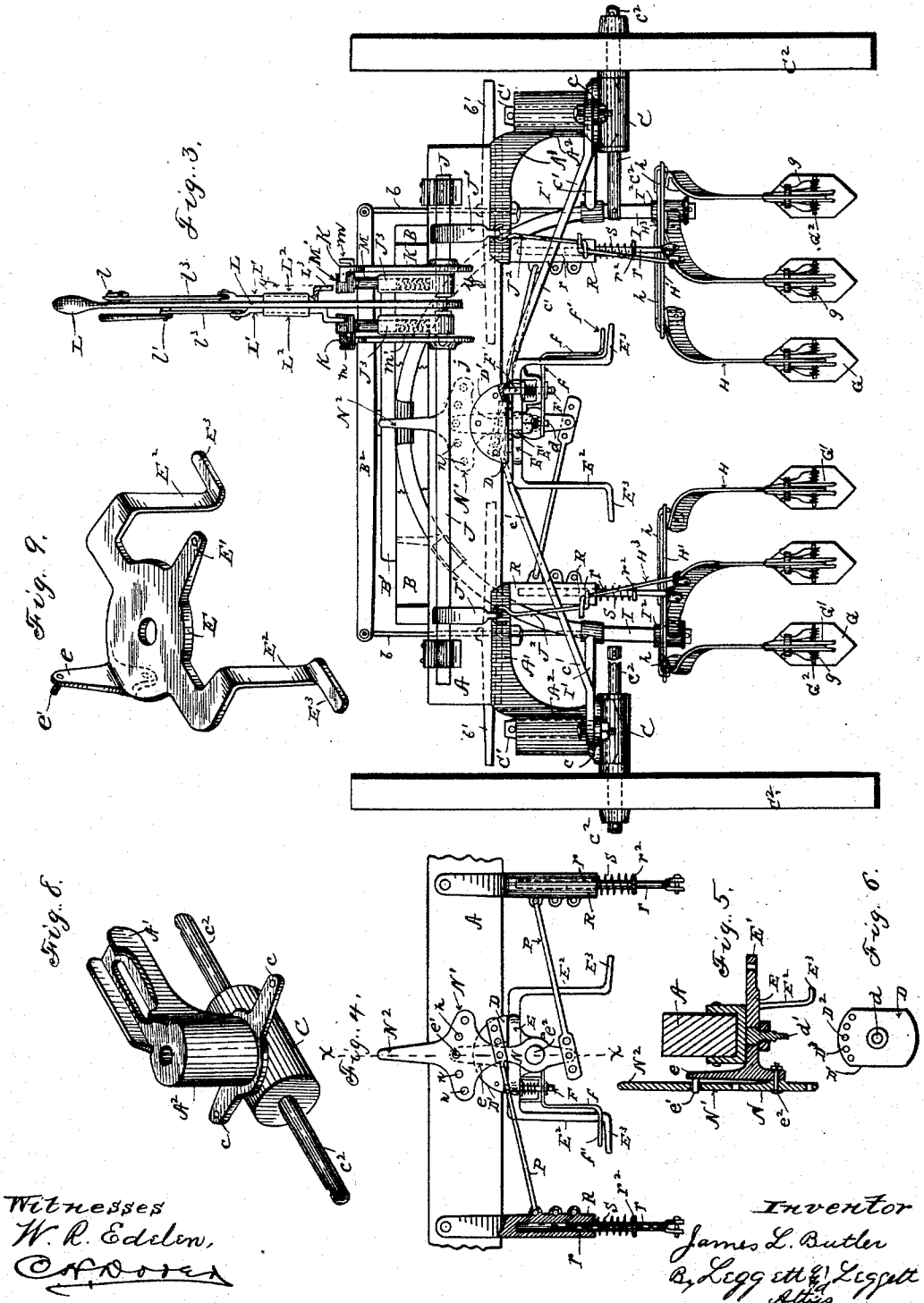

Witnesses
W. R. Edelin,
C. F. Dorsey

Inventor
James L. Butler
By Legg & Legg & Leggett
Attys

THE NORRIS PETERS CO., PHOTO-LITHO., WASHINGTON, D. C.

UNITED STATES PATENT OFFICE.

JAMES L. BUTLER, OF AKRON, OHIO.

SULKY-CULTIVATOR.

SPECIFICATION forming part of Letters Patent No. 456,551, dated July 28, 1891.

Application filed September 5, 1890. Serial No. 364,027. (No model.)

To all whom it may concern:

Be it known that I, JAMES L. BUTLER, of Akron, in the county of Summit and State of Ohio, have invented certain new and useful Improvements in Sulky-Cultivators; and I do hereby declare the following to be a full, clear, and exact description of the invention, such as will enable others skilled in the art to which it pertains to make and use the same

My invention relates to improvements in sulky-cultivators; and it consists in certain features of construction and in combination of parts hereinafter described, and pointed out in the claims.

In the accompanying drawings, Figure 1 is a plan. Fig. 2 is a side elevation. Fig. 3 is a rear end elevation. Fig. 4 is a front end elevation in detail. Fig. 5 is a transverse section on line x x, Fig. 4. Fig. 6 is a bottom plan of plate D. Fig. 7 is a side elevation in section on line y y, Fig. 3. Fig. 8 is a view in perspective of one of the axles detached. Fig. 9 is a view in perspective of spider E.

A represents a cross-beam, to which the principal members of the machine are either directly attached or are indirectly supported therefrom. To and on top of this beam are attached the prongs B B of the forked draft-tongue. To the respective end sections of beam A are attached brackets A′, these brackets having depending hubs A^2 that are bored vertically. These brackets are bolted to the under side of the beam, the securing-bolts extending through longitudinal slots in the brackets, whereby by loosening these securing-bolts the brackets may be adjusted lengthwise the beam to vary the distance between wheels C^2.

C C are the axles, the central part whereof have flat upper surfaces adapted to engage the lower ends of the opposing hub A^2. From the center of such flat sections extend integral and upright trunnions C′, adapted to fit in the bore of hub A^2, the trunnions being held in place by means of washer and cross-pin above the hub. Connected with the central section of each axle are two ears c c projecting laterally in opposite directions, these ears being pierced vertically for pivotally attaching to one ear at a time a flat bar c', the attachment being by means of a bolt extending through a hole in the bar and through a hole in the ear. The axle has spindles c^2 c^2 projecting in opposite directions and at right angles to the line of the ears and on the outer spindle are mounted wheels C^2 C^2. The axles are usually of malleable cast-iron and when the one spindle of the axle has become worn the axle is reversed and the wheel is mounted on the other spindle-bar c' having been disconnected during the reversal of the axle and then being attached to the other ear. By simultaneously turning the two axles on their vertical axes in the one direction or the other the machine may be veered to the one side or the other, as may be necessary—for instance, in following crooked rows, dodging obstructions, or straddling stray hills that are out of line with the rows, &c.

At the longitudinal center on the under side of beam A is secured a metal plate D, this plate having upturned ears D′ that embrace beam A. The one end of this plate—say the right-hand end—is provided with a series of holes D^2, arranged in concentric order with the central hole d. The latter is usually screw-threaded for receiving studs d', although a bolt might be used in place of this stud. On the depending stud or bolt is pivoted spider E next below the plate, the stud extending through a central hole of the spider. This spider is of the four-armed variety. (See Fig. 9.) To the rearward arm E′ of the spider are pivoted the two bars c' c' aforesaid, that connect with the two axles, these bars overlapping each other so that they are pivotally secured to the spider-arm by a single bolt. The bars having several holes, each adapted to receive the pivotal bolt, so that in shifting brackets A′, as aforesaid, to vary the treads of the wheels, bars c' may be lengthened or shortened accordingly by changing the bolt to different holes in bars c'. With such construction it is evident that by oscillating the spider on its axis the axles will be simultaneously oscillated, so as to change the alignment of wheels C^2. For oscillating the spider by foot-power the two lateral spider-arms E^2 E^2, that extend for a distance approximately lengthwise of the bar A, from thence trend more or less rearward and downward, and from thence turn outward, the extreme sections thereof constituting foot-rests E^3, the deflections of these two spider-arms

being had for the purpose of locating the foot-rest on a lower plane and at the rearward and out of the way of beam A, and where the foot-rests are convenient for the operator occupying seat O. The operator with his foot may therefore guide wheels C^2 C^3 at pleasure. For locking the spider so as to hold the wheels in a desired alignment is provided a vertically-operating spring-dog F, (see Figs. 3 and 4,) the dog passing through a vertical hole in the opposing spider-arm and the dog being adapted to enter an opposing-hole D^2 in plate D. For depressing or withdrawing the dog from its engagement with plate D against the action of its spring is provided lever *f*, the one end thereof being secured loosely by stud *d* aforesaid. The lever connects with the dog, and the free end of the lever curves downward and outward, so that the end section *f'* thereof is in position to be depressed by the toe of the operator without removing his foot from the adjacent foot-rest.

For ordinary purposes wheels C^2 are set to travel straight ahead, in which case the dog remains in the central hole D^2, and is only withdrawn therefrom when the operator wishes to change the line of the wheels. There are cases, however, when the dog should be set in one of holes D^3 to the one side of the central hole. For instance, in working on a steep side-hill the tendency of the machine is to drift downhill, and to counteract this downhill tendency wheels C^2 are set to travel more or less obliquely uphill, hence, the series of holes provided in plate D. In shifting the wheels temporarily to dodge obstructions and allow crooked rows, &c., the operator holds the dog depressed and has, therefore, full control of the spider in shifting the wheels.

G G represent the cultivator-blades. These are usually arranged, as shown, in groups of three, each blade or shovel being pivoted to the rearward and depending end of bent bars H H H. Said bars H H H are held in their spread position by cross-bar H', and extending from said bar H' are three pivoted bars *h h h*. Two of said bars *h h* are pivoted at their opposite ends to a rigid bar H^3, secured to the depending arms of yoke I, and have a horizontal and also a vertical movement. The central bar *h* is secured to a clip *h'*, and also has a horizontal and vertical movement. By the arrangement of said bars *h h h* of each group the shovels or cultivator-blades are always maintained in a position at right angles to the draft of the cultivator; and this novel feature is of considerable importance, as the soil is distributed equally from both sides of each shovel or cultivator-blade. Yoke I connects with prongs B B of the tongue, and at the center the yoke connects with cross-bar B' of the tongue. Draft-rods I' I' connect with the respective brackets A' near the axle and connect with sleeves I^2 I^2, the latter being mounted loosely on the arms of yoke I in the position shown; and by reason of the pivotal connection of the draft-rod with the yoke the draft-rods do not interfere in shifting brackets A' the limited distance required. These draft-rods might be pivotally attached to brackets A'; but this is hardly necessary as the rods will bend slightly to accommodate themselves to the movements of the brackets in shifting the latter endwise of beam A, and such shifting does not often occur. The doubletree B^2 is, of course, pivoted to cross-beam B'; and to the extremes of the doubletree are attached the upper ends of the equalizing-bars *b*, the lower ends of these equalizing-bars being connected by a link with sleeves I^2, aforesaid, and about opposite the draft-rods I'. Approximately at the longitudinal center of the equalizing-bars *b* are attached the singletrees *b' b'*. With such construction the draft is well distributed to different parts of the machine. The cultivator-blades on the rear sides thereof are provided each with ears G' G', that embrace the opposing sections of drag-bars H, to which they are pivoted by means of pin G^2, these pins projecting some little distance on either side of the ears. For each cultivator-blade is provided a stiff wire spring *g*, and this is bent double at the center to pass astride of bar H from the rearward. The wire then passes forward of pin G^2 outside of the ears, and then is bent backward and under the pin, and then is brought up rearward of the pin, and from thence the two ends of the wire extend forward and upward to near the top of the cultivator-blade, to which latter the ends of the wire are fastened, the tension of this spring tending to hold the upper section of the cultivator-blades rearward in position bearing against the drag-bar H. If the point of a cultivator-blade should strike an obstruction the spring would yield and allow the point of the blade to tilt rearward, and after passing the obstruction the recoil of the spring would return the blade to its normal position. These springs are simple and effective. If one of them should break it costs only a few cents to replace it with a new one. Hence they are preferred to more expensive variety of springs. For raising or lowering the two groups of cultivators in unison or independent of each other, as may be found necessary—for instance, in cultivating uneven ground, or in raising one or both groups in passing obstructions, or in raising both groups when it becomes necessary to travel with the machine from one place to another—the following is provided:

J J are rock-shafts, set in line with and abutting each other, and these are journaled in suitable boxes connected with rear side of beam A. Each rock-shaft has attached a rearwardly-projecting rock-arm J', and the extremes of these rock-arms are connected by a link J^2 with the respective central bars H of each group of these bars. Rock-shafts J J at or near the inner ends thereof are provided with upwardly-projecting hollow rock-arms J^3 J^3. The inner end of one of these rock-

shafts, and it matters not which one, is usually flush with the inner face of its rock-arm J^3, while the other rock-shaft projects, say, a half of an inch, more or less, beyond the inner face of its rock-arm J^3, and this projecting section of the shaft is usually reduced in size and has mounted thereon with an easy fit the hand-lever L. The two hollow rock-arms J^3 therefore extend up independent of each other, and are separated far enough to allow lever L to operate freely between them.

K K are stationary sectors, having overhanging rims projecting toward each other, these rims having each a series of rectangular notches or slots k (see Fig. 7) along their inner edges, these slots extending in a radial direction through the rim. In the bore of each rock-arm J^3 operates the shank of a spring-dog M, such dog being shown more clearly in Fig. 7. The dog has a rectangular head M′, and has an arm m (see Fig. 3) that extends up on the outside of and is adapted to bear against the outer face of the opposing sector, and thereby serves to steady and hold the parts in position. About the one-half of the head of the dog and the half thereof that is nearest to arm m is adapted to enter notches k of the adjacent sector, and the tension of spring m', that bears against the lower end of the dog M, tends to hold the latter elevated and engaging a notch k. The other half of the head M′ of the dog extends inside the line of the sector and comes close to lever L. To either side of lever L are attached sliding bars L′, these bars extending through suitable housings or clasps L^2, connected with lever L, whereby bars L′ may slide endwise of lever L, but have little or no lateral lost motion. Each bar L′ has a slotted lower end, the slot being shown at L^3, the width of the slot being such that the prongs of the lever fit nicely outside of the opposing section of the head of the dog. To opposite sides of the lever L are pivoted levers l l, these levers being of the bell-crank variety. These levers are pivoted at their elbows, but are arranged in the reverse order shown, the respective pivotal points being shown at l' l'. The long arms l^2 l^2 of levers l l serve as handles, and the short arms of these levers are connected by links l^3 l^3 with the respective forked sliding bars L′ aforesaid. The one lever l is located a little higher than the other, so that each or both handles l^2 may be grasped in handling lever L. With the dogs in position engaging the notches of the sector and with the forked end of the sliding bars L′ engaging the dog, handles l^2 will stand at about an angle of thirty or forty degrees from lever L. In grasping a handle l^2 and pressing it against the handle of lever L the opposing dog will be depressed, so as to become disengaged from the notches of its sector. On the other hand, by turning down a handle l^2 to a position approximately at right angles to lever L the connected bar L′ will be elevated so far as to become wholly disengaged from its opposing dog. So long as either dog engages a notch of the opposing sector, the group of cultivators that are connected with such dog in the manner aforesaid remain locked and cannot be moved up or down. Suppose it is desired to simultaneously raise or lower the two groups of cultivators. In such case both handles l^2 are grasped and brought in contact with lever L, thereby depressing both dogs and disengaging them from the notches of the sectors, and with handles l^2 held in such position lever L, as it is moved forward, will, by the engagement of forked bars L′ with the dogs, cause the dogs and their connected rock-arms J^3 to swing forward, and this would elevate the cultivators, and a reverse movement of lever L would lower the cultivators; but suppose it is desired to raise or lower one group of cultivators without disturbing the other group—for instance, if the left-hand group of cultivators have remained undisturbed—in such case the left-hand handle l^2 is turned down, and consequently the connected forked lever L′ is elevated and disengaged from its opposing dog. If now the right-hand handle l^2 is pressed against lever L, the right-hand dog will be disengaged from its sector, after which, by manipulating lever L, the left-hand group of cultivators may be raised or lowered at pleasure, whereupon by releasing the right-hand handle l' the right-hand group of cultivators will be locked in their adjusted position. It will therefore be seen that the two groups of cultivators may be raised or lowered in unison or either group may be raised or lowered independent of the other group. This implement is well adapted to cultivating corn, potatoes, or other crops that are planted or drilled in rows.

Some farmers plant their rows closer together than others; hence the provision already mentioned for varying the distance between the wheels, and a corresponding provision must be made for varying the distance apart of the two groups of cultivators, and this is accomplished as follows, to wit:

A forwardly-projecting arm e of spider E at some little distance forward of beam A is turned up at a right angle, and this upright member e, and close to the elbow thereof, has pivoted at e^2 an upright lever N. A few inches above the fulcrum thereof this lever has a broad section N′, provided with a series of holes n, arranged in concentric order with the fulcrum of this lever, and above this broad section the lever terminates in a handle N^2, the handle projecting some inches above the line of beam A, to where it may be conveniently handled. The upturned section of arm e near the upper end thereof is provided with a forwardly-projecting pin e' adapted to enter successively holes n aforesaid.

Lever N is thin and elastic, so that by pressing forward on handle N^2 this lever may be disengaged from pin e', whereupon by turning the lever on its fulcrum in the one direction or the other, pin e' may be made to enter any hole n of the series. About equal dis-

tances above and below the fulcrum of lever N are pivoted thereto rods P P, these rods in turn connecting with depending vibrating levers R R, the latter being pivoted at their upper ends to beam A on the front side of the latter. Levers R R are hollow and in the bores thereof operate, respectively, the upper sections of extension-rods r r, that may lengthen or shorten, according as the cultivators are depressed or elevated. The lower ends of these rods are connected, respectively, with an arm H of the respective groups of arms. With such construction, by turning lever N on its fulcrum in the one direction, the two groups of cultivators are further separated, and by turning lever N in the opposite direction the two groups are drawn nearer together. Lever N is therefore manipulated to set the two groups of cultivators the right distance apart, according to the distance apart of the rows in the field that is to be cultivated. Springs S S may be coiled around the respective rods r r, these springs bearing against collars r^2 r^2 and bearing against the lower ends of levers R R. The tension of these springs tends to thrust the cultivator-blades into the ground. From the fact that lever N is mounted and normally locks the arm e of spider E, and hence must move with this arm, it follows that by oscillating the spider to change the line of the wheels by reason of the connecting mechanism just described, both groups of cultivators are by the same operation swayed to the one side and to that side toward which the travel of the wheels incline, so that not only the wheels may be directed to the one side or the other, as may be necessary in following crooked rows, but at the same time the cultivators may be swung nearer to the one wheel to perchance avoid uprooting some stray hills that have inadvertently been planted more or less to the one side of the row.

With the construction shown and described it is believed that provision has been made for meeting about every contingency and for rendering the cultivator adapted to all ordinary purposes.

What I claim is—

1. A sulky-cultivator having pivotally-supported reversible axles, each axle having two spindles adapted to receive the wheel, the wheel being mounted on the one spindle or the other according to the position of the axle, substantially as set forth.

2. A sulky-cultivator having a separate axle for each wheel, each axle being reversible and adapted to turn on an axis perpendicular to the axle, mechanism, substantially as indicated, for simultaneously turning the two axles on their axes in the same direction, substantially as set forth.

3. In a sulky-cultivator, the combination, with reversible axles adapted to oscillate on axes perpendicular thereto, of spider E, having arms thereon, said spider adapted to oscillate on a vertical axis, the spider being operatively connected with the respective axles for oscillating the latter in unison, substantially as set forth.

4. In a sulky-cultivator, in combination, reversible axles, spider E, constructed substantially as described, and mechanism connecting the spider with the axle, substantially as indicated, the spider having arms or rests for receiving the foot of the operator, whereby the mechanism may be actuated by foot-power, substantially as set forth.

5. In a sulky-cultivator, the combination, with axles, spider, and connected mechanism, substantially as indicated, the spider having foot-rests for operating the same, of a dog for locking the spider in different positions, the tripping-lever of the dog being in reach of the operator's foot while occupying a foot-rest on the spider, substantially as set forth.

6. In sulky-cultivators, the combination, with cultivators arranged in two independent groups, of mechanism, substantially as shown, for raising and lowering and locking the respective cultivator groups independent of each other, such mechanism being operatively connected with and operated by a hand-lever in common, whereby the two groups of cultivators may be actuated independent of each other or in unison with each other, substantially as set forth.

7. In sulky-cultivators, the combination, with brackets adjustable lengthwise, a cross-beam of the implement, such brackets having vertical bores, of reversible axles having trunnions perpendicular to the axles, such trunnions being journaled in the bores of the respective brackets, substantially as set forth.

8. In sulky-cultivators, the combination, with a spider and connecting mechanism for oscillating cultivators in a horizontal and vertical position, of the cross-heads and rods adapted to retain the shovels or blades at right angles to the draft of said cultivator, substantially as shown and described.

In testimony whereof I sign this specification, in the presence of two witnesses, this 9th day of July, 1890.

JAMES L. BUTLER.

Witnesses:
C. H. DORER,
WARD HOOVER.