United States Patent

[11] 3,614,715

[72] Inventor **Walter H. Marx**
Berkley Heights, N.J.

[21] Appl. No. **844,800**
[22] Filed **July 25, 1969**
[45] Patented **Oct. 19, 1971**

[73] Assignee **General Cable Corporation**
New York City, N.Y.

[54] **CORDSET BLADE DESIGN**
7 Claims, 10 Drawing Figs.

[52] **U.S. Cl.** ..... **339/252 P,** 339/276 T
[51] **Int. Cl.** **H01r 13/06**
[50] **Field of Search** 339/62, 63, 95, 97, 99, 21.8, 22.3, 252, 276, 195, 196

[56] **References Cited**

UNITED STATES PATENTS

3,204,213	8/1965	Bauer	339/62
1,674,246	6/1928	Gaynor et al.	339/196
1,988,725	1/1935	Glade, Jr.	339/196
2,136,498	11/1938	Geyer	339/62
2,800,638	7/1957	Hammell	339/276
2,982,938	5/1961	Klumpp, Jr.	339/97

FOREIGN PATENTS

60,816	4/1943	Denmark	339/252
1,273,013	1/1961	France	339/252 P

Primary Examiner—Joseph H. McGlynn
Attorney—Sandoe, Hopgood & Calimafde

ABSTRACT: This cordset blade construction has a ridge formed in the prong end of the blade so that the blade has equivalent strength even though made of lighter stock, as compared with a heavier blade, and the blade is shaped to fit conventional outlets, even though the blade is thinner than conventional blades. The strain relief tab, on the end of the blade over which the insulation plug is to be molded, is notched to serve as a die for cutting through the insulation in an improved method for attaching the blade to an insulated conductor.

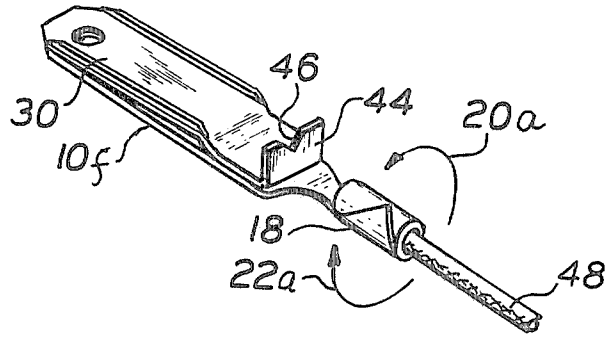

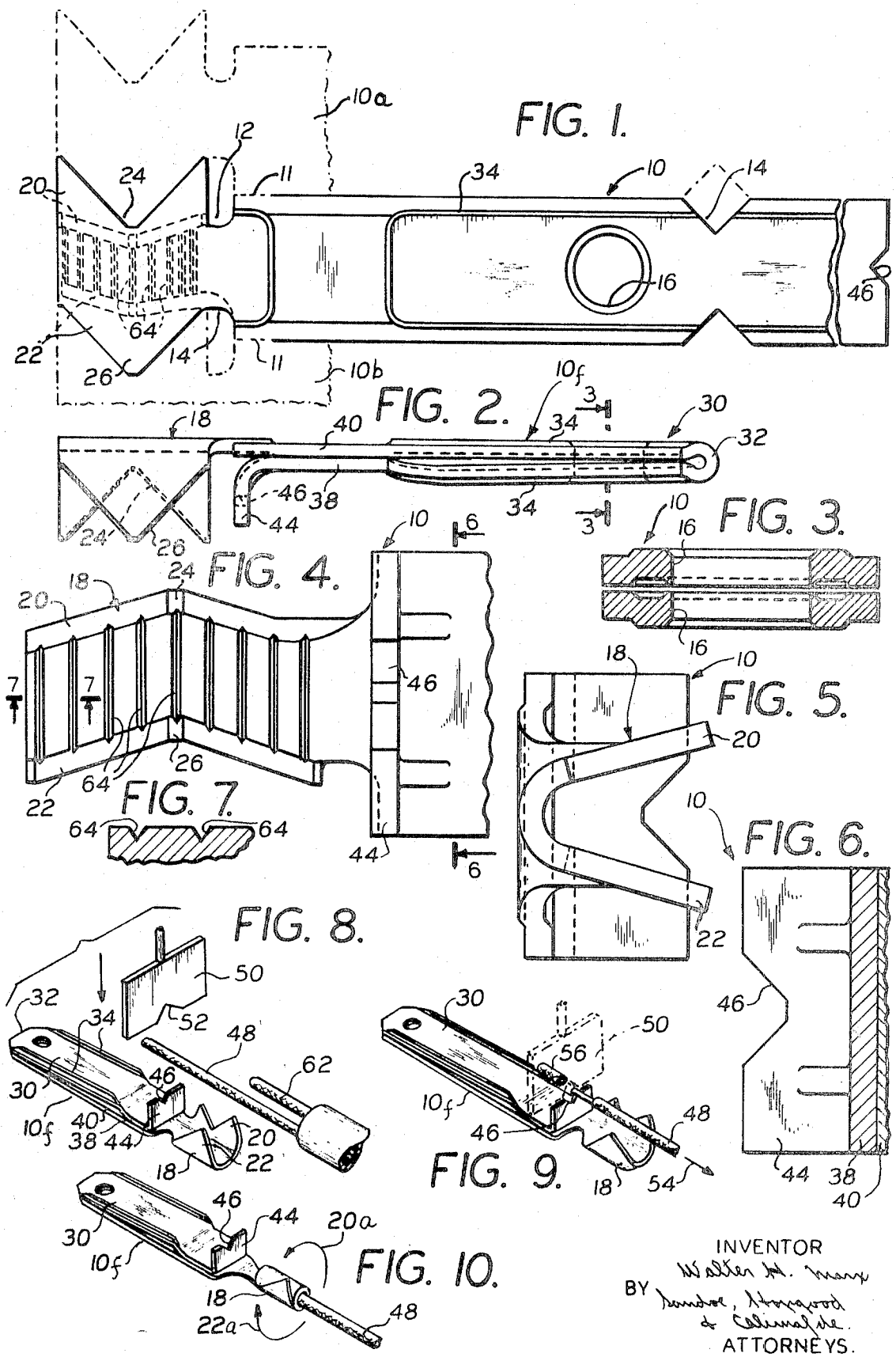

INVENTOR
Walter H. Marx
BY Sandoe, Hopgood & Calimafde.
ATTORNEYS.

CORDSET BLADE DESIGN

BACKGROUND AND SUMMARY OF THE INVENTION

This invention relates to the design of cordset blades and the application thereof. These blades act as connecting devices between a power line and a length of cable which will conduct electrical current to a motor, appliances or similar load.

Cordsets are composed of blades of various configurations on one or both ends of a length of insulated cable. These cables are formed into two basically different types, parallel and jacketed.

Parallel cords are made of two, three or more straight, side-by-side bunches of stranded copper wires covered by rubber or thermoplastic jacketing. The length of cord is cut to a specified length and the ends stripped of their insulation. Blades are then crimped onto the bare conductors around which a plug is molded. In the case of parallel cords, the cutting, stripping and terminating operations may or may not be automated.

Jacketed cords are constructed of two, three or more insulated wires twisted together in a helical manner with fillers and covered with a round outer jacket of extruded rubber or thermoplastic material. Various fillers, usually jute or paper, are used to maintain a consistently round cross section. This continuous length of cord is then cut to length and the ends stripped of the outer round jacket. This is usually done automatically. The exposed fillers are then trimmed and the wires are stripped of their individual insulated coatings, after which the blades are crimped in place and a plug molded over the end in a fashion similar to the parallel cords. Trimming, stripping of conductors, and blading of jacketed cords, is a manual operation.

This invention has the material of the prong end of the blade, that fits into the electric outlet, formed with an embossed ridge to give the blade added body strength. This allows the blade to be made of 20 mil stock and approach the strength characteristics of 26 mil stock, thereby saving material costs. This blade will also fit mating terminals that have been designed for use with the heavier material.

The blade layout is shaped so that side-by-side blade blanks can be stamped from strip stock with no gap between them and there is no waste except from such openings as have to be punched through the blanks. This feature affords substantial saving in material.

The invention has the crimping barrel, that grips the conductor, somewhat larger than in conventional blades, for greater strength and more area of contact. The strain relief tab is stamped with a notch that serves as an insulation cutting die and as means for stripping the insulation from the conductor during the application of the blade to a conductor. With prior-art blades, the application required that stripping and terminating, especially on the jacketed cordsets, be done in separate operations, usually by different operators at different locations. The first operator manually stripped the conductors, using simple upper and lower "V" notch dies. The cords were then transported to the second operator who crimped the blade barrel onto the stripped wire.

This invention allows the two operations to be done simultaneously by one operator at the same rate of production that crimping would normally take.

Other objects, features and advantages of the invention will appear or be pointed out as the description proceeds.

BRIEF DESCRIPTION OF THE DRAWINGS

In the drawings, forming a part hereof, in which like reference characters indicate corresponding parts in all the views:

FIG. 1 is a fragmentary plan view of a cordset blade made in accordance with this invention and illustrating the manner in which the blade can be cut from a metal sheet without waste, except for necessary holes;

FIG. 2 is a view of the cordset blade shown in FIG. 1 after the blade has been bent to form the prong end and to prepare it for receiving a conductor;

FIG. 3 is a greatly enlarged sectional view taken on the line 3—3 of FIG. 2;

FIG. 4 is a greatly enlarged front view of the left-hand end of the blade shown in FIG. 2;

FIG. 5 is an end view of the blade shown in FIG. 4;

FIG. 6 is a sectional view taken on the line 6—6 of FIG. 4;

FIG. 7 is an enlarged sectional view taken on the line of 7—7 of FIG. 4;

FIG. 8 is an isometric view of the blade shown in FIG. 2 and illustrating the way in which a conductor is presented to the blade;

FIG. 9 shows the way in which the blade removes insulation from the conductor; and

FIG. 10 shows the blade of the other FIGS. attached to the conductor.

DESCRIPTION OF THE PREFERRED EMBODIMENT

FIG. 1 shows a cordset blade blank 10, partly broken away to permit the use of a larger scale, and shows portions of the other blade blanks 10*a* and 10*b* which are punched from the same strip of metal; the blanks being connected to one another by connecting webs 11 which are broken to separate the finished blades before connecting a blade to a conductor. It will be noted that the blanks are shaped so that their outlines fit one another to avoid waste in making the blanks. The only waste between adjacent blanks is that which results from the punching of notches 12 and 14. Each prong of the blade contains an opening 16 which also involves some necessary waste of metal.

The cordset blade blank 10 is then bent to the shape shown in FIG. 2; the bent blank being designated by the reference character 10*f*. One end is bent to provide a barrel 18 for receiving a conductor. This barrel 18 is formed by sides 20 and 22 bent up from the center portion of the blank 10. The side 20 has a low midportion 24 and the side 22 has a high midportion 26, the shape of the edges forming these midportions being complementary to one another.

The cordset blade 10*f* has a prong 30 which is formed by folding portions of the blank along a fold 32. The sides of the prong 30 are formed with an embossed ridge or plateau 34 having a height of approximately 0.006 inches. The center of this plateau extends outwardly in the folded prong of the completed blade.

The ridge 34 extends outward in the same direction, in the blank 10, for the entire length of the ridge; but when the blank is folded along the fold 32, the ridge 34 extends from opposite sides of the prong 30 since the folded-over portion of the blank is turned around with respect to the unfolded portion. Thus the prong 30 is of double thickness. The part which is folded back extends generally parallel to the unfolded part but preferably does not touch it. This increases the thickness of the prong and at the same time, permits the sides to be squeezed close together to obtain a snug fit of the prong in an electric outlet.

The ridges 34 not only stiffen the prong but they also increase its effective thickness so that even though the prong is made of much lighter metal than conventional prongs, it still has ample thickness to fit within conventional electric outlets. In fact, it fits better than solid prongs because the resilience provided by the folded construction makes it practical to have the total thickness of the prong slightly greater than the thickness of the contact recess into which the prong is inserted in an outlet box.

The folded-over portion of the prong 30 has an opening 16 which registers with the corresponding opening 16 in the unfolded portion to provide the opening which is conventional for cordset blades.

The folded-over portion of the prong 30 has a flat part 38 which contacts with an unfolded part 40 of the blade. These

parts 38 and 40 extend into the insulation which is molded around the end of the cordset blade to which a conductor is connected. There is a strain relief tab 44 at the end of the part 38. Strain relief tabs are conventional in cordset blades over which insulation is to be molded.

The strain relief tab 44 has a novel feature of this invention. Its transverse edge contains a notch 46 and the edges of the notch 46 are stamped so that they form one side of a cutting die. The purpose of this notch 46 is best illustrated in FIGS. 9 and 10. After the blank 10 has been folded as shown in FIG. 2, to form the cordset blade designated by the reference character 10*f*, a conductor 48, to which the blade 10*f* is to be connected, is brought into position extending beyond the notch 46. This conductor 48 has been cut to the desired length but is still covered with insulation. A complementary die element 50 is brought down over the conductor 48, as shown in FIG. 9.

The complementary die element 50 has a notch 52 with a stamped edge complementary to the stamped edge of the notch 46 and the edges of these notches 46 and 52 are cut through the insulation on the conductor 48 throughout substantially its full circumferential extent. The cutting can be completed by pulling the conductor 48 slightly while gripped between the edges of the notches 46 and 52. The conductor 48 is then pulled back as indicated by the direction arrow 54, and this skins the insulation 56 from the portion of the conductor 48 which extends beyond the notch 46.

The invention can be used without the complementary die element 50. By pressing the conductor 48 down against the edge of the notch 46 the insulation can be cut through sufficiently to enable it to be pulled off. The cut does not have to be circumferentially complete since uncut portions of the insulation will tear loose at the cut.

When the conductor 48 is pulled back, as indicated in FIG. 9, its motion in the direction of the arrow 54 is continued until the bare portion of the conductor 48 is over the barrel 18. The conductor is then moved into the barrel through the open upper side of the barrel between the sides 20 and 22 and the barrel is closed on the bare portion of the conductor 48 by bending the sides of the barrel around the conductor, as indicated by the arrows 20*a* and 22*a*. This completes the connection of the cordset blade 10*f* to the conductor 48.

Another cordset blade is connected to the conductor 48 for the other side of the circuit and the cordset blades with the connected conductors are placed in a mold which applies the usual insulation to the assembly.

In order to grip the conductor 48 more tightly, the cordset blade barrel 18 has transversely extending surface interruptions 64 which are shown as depressions (FIG. 7). These surface interruptions or depressions 64 are illustrated as being parallel to one another, and when the barrel 18 is closed around the conductor, the pressure applied to the sides of the barrel distorts the surface of the conductor into the depressions 64 so that the conductor can not be pulled out of the barrel on a longitudinal direction.

The preferred embodiment of the invention has been illustrated and described, and the invention is defined in the appended claims.

I claim:

1. An electrical cordset blade having a barrel at one end for connection with a conductor, the barrel being open along its top side for receiving a conductor, said blade having a prong at the other end for insertion into an electrical outlet, a strain relief tab on the blade between the barrel and the prong, said tab extending upward and having a notch therein, the edge of the notch being a die against which the insulation of the conductor is pressed for cutting through the insulation that is to be removed from the conductor prior to the insertion of the conductor into the barrel.

2. The electrical cordset blade described in claim 1 characterized by the upwardly extending tab being substantially normal to the prong and the notch being generally V-shaped and in alignment with the open top side of the barrel, the tab and notch being combined with a complementary die element that has relative movement toward and from the relief tab notch for pressing the insulation against the edge of the notch to cut through the insulation around the lower part of the circumference of the conductor, said complementary die element having an edge that cuts through the insulation at the upper part of the circumference of the conductor whereby the insulation is cut through around most of the circumference of the conductor and can be pulled off the conductor in an axial direction.

3. The electrical cordset blade described in claim 1 characterized by the prong portion of the blade being made of two portions of stock with one folded back on the other, one portion being of one-piece construction with the barrel and the other portion being of one-piece construction with the strain relief tab.

4. The electrical cordset blade described in claim 3 characterized by the fold where one portion of the prong is bent back along the other being at the end of the prong remote from the barrel and the strain relief tab.

5. The electrical cordset blade described in claim 4 characterized by both portions of the prong having ridges formed thereon extending in a direction away from the fold to stiffen the prong, the ridge in each portion of the prong extending outward from the surface of that portion which is remote from the other portion of the prong to increase the transverse thickness of the prong, the different portions of the prong being generally parallel to one another but spaced from each other along most of their length and being made of resilient material whereby they can be squeezed close together to fit into openings in an electric outlet.

6. The electrical cordset blade described in claim 1 characterized by the barrel having different shaped edges on different sides of its top opening, the different edges and sides of the barrel being complementary so that each of the sides of the barrel, before being formed from a flat blank, fits the complementary sides of a like blank whereby blanks in side-by-side relation with no clearance between them can be stamped from a sheet of metal stock, and web portions of the blank by which it is connected to contiguous blanks during stamping and forming of the blank.

7. The electrical cordset blade described in claim 6 characterized by one side of the barrel being high at its midportion and lower towards the ends thereof, the other side of the barrel being low at its midportion and higher toward the ends, both sides having substantially the same angle of divergence from the midportion whereby the barrel, when formed around a conductor, has a high midportion on one side which fits into the clearance provided by the low midportion on the other side, and the inside surface of the barrel having transversely extending depressions for distorting the surface of the conductor and obtaining a stronger grip of the barrel on the conductor for resisting endwise pull.