United States Patent [19]

Ferguson

[11] **3,927,595**

[45] **Dec. 23, 1975**

[54] **GUITAR FINGER SHIELD**

[75] Inventor: **Laureen M. Ferguson,** Pierrefonds, Canada

[73] Assignee: **The Raymond Lee Organization, Inc.,** New York, N.Y. ; a part interest

[22] Filed: **Mar. 10, 1975**

[21] Appl. No.: **556,903**

[52] **U.S. Cl.** **84/322;** 84/453

[51] **Int. Cl.²** **G10D 3/16**

[58] **Field of Search** 84/320, 322, 453

[56] **References Cited**

UNITED STATES PATENTS

1,690,860	11/1928	Gonzales	84/322
1,741,285	12/1929	Carpenter	84/322
2,072,683	3/1937	Niedorff	84/322 X

FOREIGN PATENTS OR APPLICATIONS

602,024	8/1934	Germany	84/322

Primary Examiner—Lawrence R. Franklin

Attorney, Agent, or Firm—Howard I. Podell

[57] **ABSTRACT**

A finger shield for use in playing of the guitar that safeguards the nails of the player and permits conventional fingering of the guitar strings. The shield is in the form of a flexible rubber or plastic cup, the inside of which is shaped to fit about the tip of a finger and the finger nail, with a hardened insert fitted externally on the shield for use in fingering of a guitar string.

1 Claim, 3 Drawing Figures

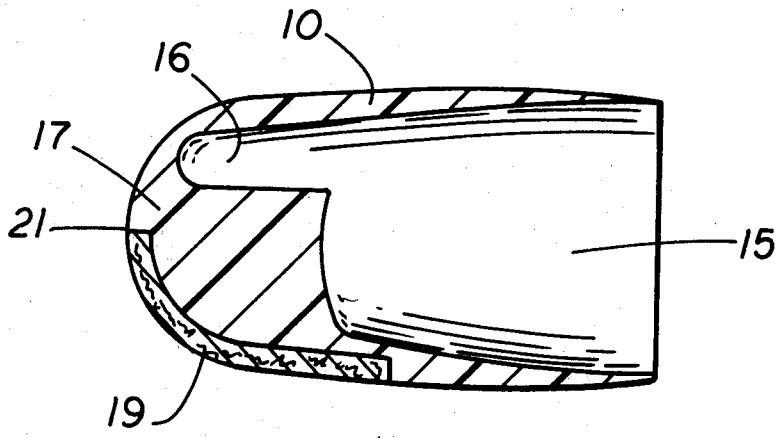

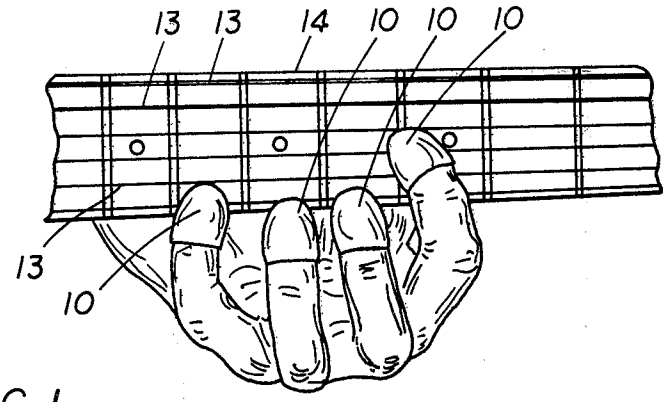

FIG. 1

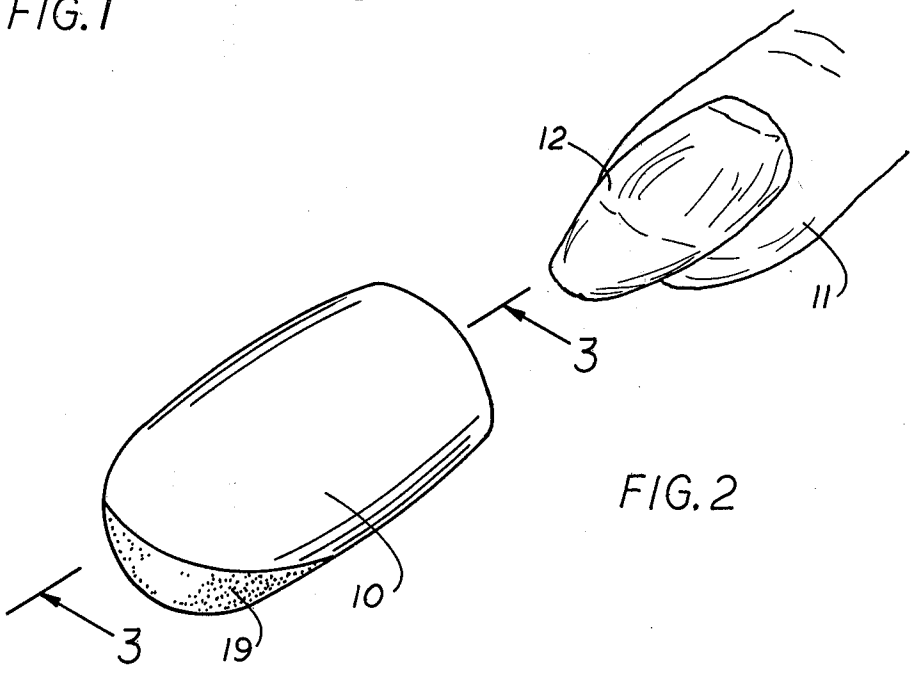

FIG. 2

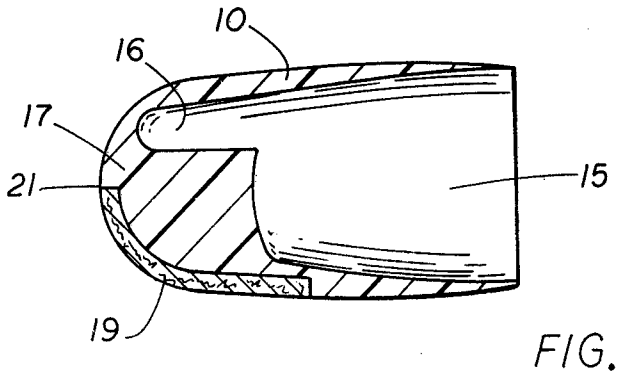

FIG. 3

GUITAR FINGER SHIELD

SUMMARY OF THE INVENTION:

My invention is a finger shield for use in playing of the guitar that safeguards the nails of the player and permits conventional fingering of the guitar strings.

The shield is in the form of a flexible rubber or plastic cup, the inside of which is shaped to fit about the tip of a finger and the finger nail, with a hardened insert fitted externally on the shield for use in fingering of a guitar string.

BRIEF DESCRIPTION OF THE DRAWING:

The objects and features of the invention may be understood with reference to the following detailed description of an illustrative embodiment of the invention, taken together with the accompanying drawings in which:

FIG. **1** is a perspective view of the invention in use;

FIG. **2** is an exploded view of the invention applied to a finger; and

FIG. **3** is a sectional view taken along line **3**—**3** of FIG. **2.**

DESCRIPTION OF THE PREFERRED EMBODIMENT:

Turning now descriptively to the drawings, in which similar reference characters denote similar elements throughout the several views, FIGS. **1-3** show the finger shield **10** which may be installed over the tip of a finger **11** so as to enclose the finger **11** and finger nail **12,** yet permit fingering of the strings **13** of a guitar **14.**

The shield **10** is formed of a flexible rubber or plastic material and shaped as a cap with an internal recess **15**

open at one end of a size to engage the tip of a finger **11,** and with a recess **16** in the closed end **17** of the cap to fit loosely about a projecting fingernail **12** of the enclosed finger tip.

A semi-rigid insert **19** is integrally fitted to the exterior of the shield **10** and located so as to extend about the external surface of the shield from the closed cap end **21** of the shield to the external section of the shield adjacent the finger tip of the wearer. The semi-rigid insert **19** permits the user to press the insert **19** directly against a desired section of the guitar string **13** in point contact and without creating excessive deflection of the shield against the string **13.**

Since obvious changes may be made in the specific embodiment of the invention described herein, such modifications being within the spirit and scope of the invention claimed, it is indicated that all matter contained herein is intended as illustrative and not as limiting in scope.

Having thus described the invention, what I claim as new and desire to secure by Letters Patent of the United States is:

1. A finger shield, in the form of a cap, for use in playing a guitar which permits a finger enclosed in the shield to finger the strings of the guitar in conventional fashion comprising

a cap shaped member formed of flexible material with an internal recess, open at one end, of a size to enclose the tip of a finger, said recess formed with a further recess in the closed section of the cap of a size to fit about the nail of a finger enclosed by the cap shaped member, with an insert of semi-rigid properties integrally fastened on the external portion of the cap adjacent to the tip of an enclosed finger, in the installed position.

* * * * *