April 20, 1948. J. L. ANDREWS 2,440,063

PUSH BUTTON SWITCH

Original Filed Dec. 22, 1944

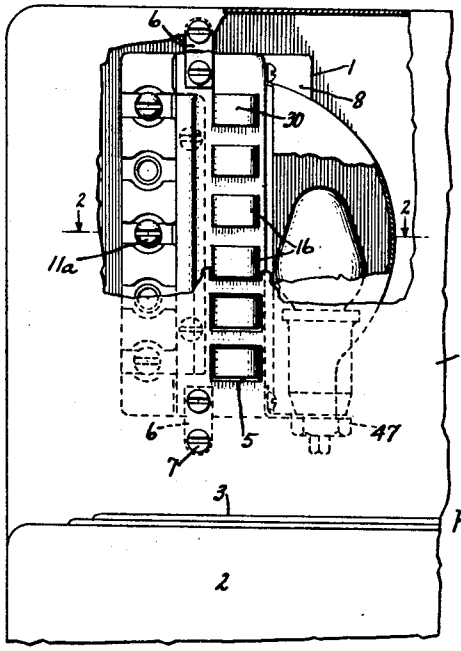

Fig. 1.

Fig. 2.

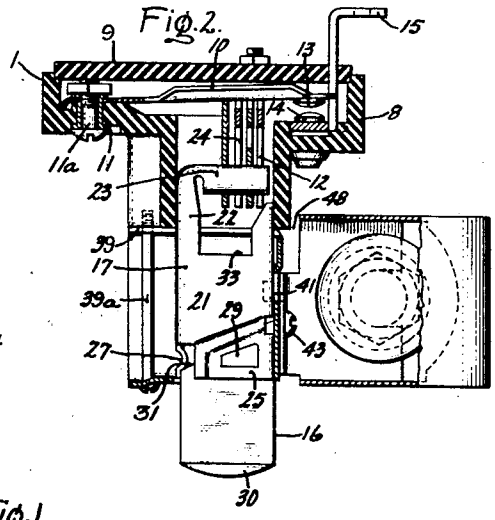

Fig. 3.

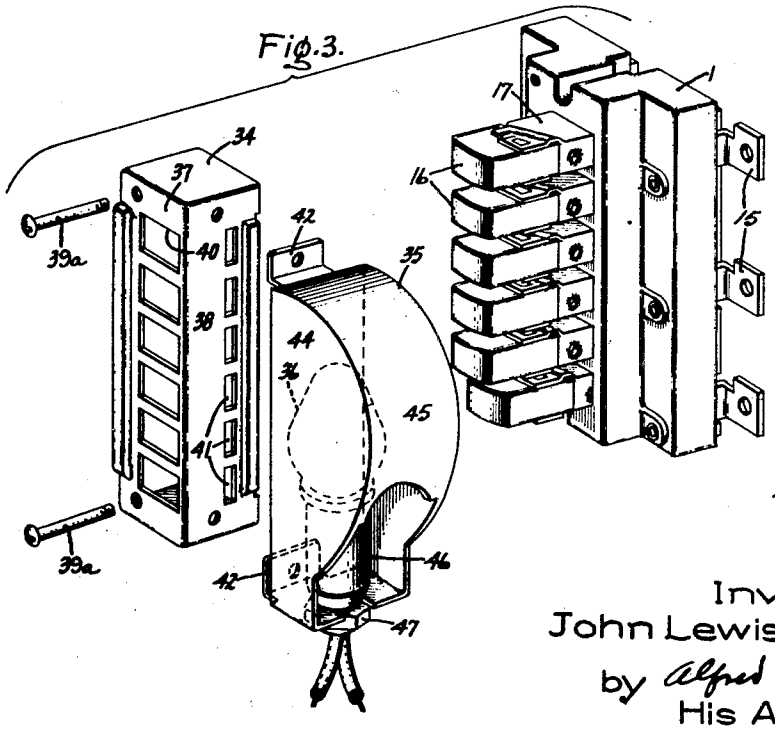

Fig. 4.

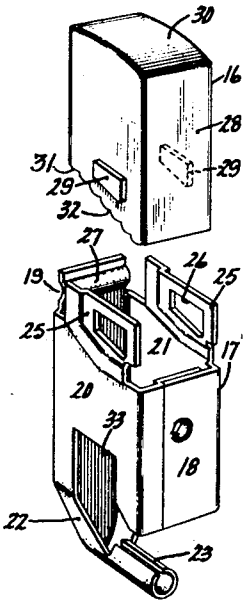

Inventor:
John Lewis Andrews,
by Alfred V. Bobst
His Attorney.

Patented Apr. 20, 1948

2,440,063

UNITED STATES PATENT OFFICE

2,440,063

PUSH-BUTTON SWITCH

John Lewis Andrews, Fairfield, Ill., assignor to Hotpoint Inc., a corporation of New York

Original application December 22, 1944, Serial No. 569,296. Divided and this application February 2, 1946, Serial No. 645,176

5 Claims. (Cl. 200—167)

1

The present invention relates to push button switches of the type which include a plurality of push buttons for actuating slides to effect closing of one or several definite electric circuits upon the actuation of one push button and simultaneously preventing the operation of another push button through suitable interlocking mechanisms.

The object of my invention is to provide an improved construction and arrangement of push button switches of the type above specified which are comparatively simple in construction and safe and reliable in operation.

This application is a division of my copending application, Serial Number 569,296, filed December 22, 1944, now Patent Number 2,431,904, issued December 2, 1947.

For a consideration of what I believe to be novel and my invention, attention is directed to the following description and the claims appended thereto in connection with the accompanying drawing.

In the drawing Fig. 1 is a top view of a push button switch embodying my invention associated with an electric kitchen range; Fig. 2 is a section along line 2 of Fig. 1, this figure being drawn to a larger scale than is Fig. 1; and Figs. 3 and 4 are exploded perspective views of certain parts of the switch of Fig. 2.

Referring to the drawing this invention has been shown in one form as applied to a push button switch mounted on a kitchen range 2 having a heating unit 3 and a back-splash 4. The back-splash 4 has an opening or openings through which the buttons of the switch project. The switch, as shown, is mounted on the rear of the back-splash and secured thereto by means including brackets 6 and screws 7.

The switch 1 has a molded insulating base 8 forming a chamber with pockets and closed by a cover 9. A plurality of contact blades 10 are mounted on the insulating base by means including hollow rivets 11. Terminal screw means 11a are secured to some of the rivets 11. The contact blades 10 are actuated by four slides 12. The contact blades 10 carry on their free ends movable contacts 13 cooperatively associated with stationary contacts 14 secured to the base and electrically connected to terminal means 15. The four slides 12 for actuating the contact blades 10 are cooperatively associated with six push buttons 16 for actuating the slides and the contact blades 10 in a predetermined sequence.

Each push button 16 comprises a plunger 17 which is fabricated from a single piece of material, preferably sheet metal, by a punching and

2

forming process and having a front wall 18, a rear wall 19 and side walls 20 and 21. The rear wall 19 has a downward or lower extension 22 as viewed in Fig. 4, which forms a cylindrical pin 23 extending horizontally towards the front wall 18 for cooperation with openings or cam surfaces 24 of the slides 12. Upper portions of the side walls 20, 21 have extensions forming lugs 25 with openings 26. The rear wall 19 has an upper extension with a raised bead 27 on its back projecting towards the front wall 18. The lugs 25 and the bead 27 serve to locate and positively support a button proper 28 which has opposite side walls formed with lugs 29 shaped to fit the openings 26 of the lugs 25 and producing a snap action therewith. The button is prism-shaped and made from translucent or transparent plastic material. The button has an outer end surface or top 30 which is slightly curved and an opposite reflecting surface or bottom 31 inclined towards the rear and front walls of the button. The reflecting surface 31 is preferably provided with a plurality of parallel grooves 32 to obtain best light reflection towards the end surface 30. When assembled with the plunger the button is held firmly in position by spring tension of the lugs 25 and also by additional spring pressure provided by the raised bead 27 on the back wall engaging one end of the reflecting surface 31, as best shown in Fig. 2. Thus, the plunger is made from a single fabricated piece. Portions of the fabricated plunger form means for locating and supporting the plastic button and another portion of the fabricated plunger forms a horizontally extending pin for cooperation with the slides of the switch.

The pin 23 and the front wall 18 are vertically spaced as viewed in Figs. 2 and 4, thereby forming a gap for easy assembly of the slides which can be accomplished simply by hooking the slides onto the pin. Lower portions of the side walls 20, 21 have rectangular slots 33 opening towards the pin 23 to accommodate portions of the four slides 12 when assembled therewith.

During assembly of the push buttons and the slides on the base the push buttons are inserted into the pockets of the base and the slides thereafter are hooked onto the pins 23 from the bottom of the base. Thereafter the push buttons with the slides are pulled into the pockets of the base to permit assembly of the contact springs and terminals on the base.

The present arrangement includes an adapter 34 and a reflector 35 with a miniature light bulb 36 to improve its action and give desired lighting

effects on the switch buttons. The adapter is in the form of a fabricated sheet metal case having a top 37 and a side wall 38. The end walls of the adapter form lugs 39 for attachment to the insulating base by means of screws 39a.

The top wall 37 has six rectangular openings 40 for accommodating, guiding and aligning outer portions of the reflecting buttons 28. These openings 40 support the buttons as they are moved in and out, preventing any tilting thereof and assuring smooth movement during operation. Proper alignment of the push buttons and plunger assemblies is important for correct indexing of the switch slides in that it insures the actuating pins 23 being held in correct position at both extremes of travel of the push buttons.

The side wall 38 of the adapter has six windows 41 aligned and each associated with one of the openings 40 in the top. The windows are so placed that when a push button is moved all the way in, the lower end portion of its transparent section comes opposite a window, thus allowing light to be transmitted through the transparent material and to be reflected to the outer surface 30 of the button by the obtuse angle and the grooves 32 of the reflecting surface 31. The proper location of the windows 41 and the shielding effect produced by the adapter to prevent leakage of light to adjacent buttons is important to give a clear visual indication as to which of the buttons is actuated.

In addition, the adapter provides a convenient means for mounting the switch on the range switchboard as by the aforementioned brackets 5 and screws 6. Furthermore, in the present arrangement the adapter functions as a support for the reflector 35 with the light source 36.

The reflector 35 is made from fabricated sheet metal forming lugs 42 for attachment to the side wall 38 of the adapter by means of screws 43 (Fig. 2). The reflector has plane side walls 44 and a curved, substantially cylindrically shaped reflecting rear wall 45. It has been found that such cylindrical wall provides for substantial concentration of the light towards the relatively small windows 41. The miniature lamp or bulb 36 is held in a socket 46 securely attached to an end portion of the reflector by means including a nut 47. The reflecting wall 45 adjacent the socket 46 is cut away, permitting removal of the socket 46 with the bulb 36 upon loosening of the nut 47 without requiring dismantling of the reflector. The free edges of the side walls 44 of the reflector when mounted on the base are secured from the adapter, thus forming clearances 48, permitting the circulation of air through the reflector and thus assuring ventilation and reducing heating of the insulating base.

The operation of the switch is similar to that described in connection with the switch shown in Figs. 1 to 12 of the aforementioned copending application. The circuit of the indicating lamp 36 may be interconnected in known manner with the "off" button so that the lamp 36 is disconnected whenever the "off" button is pushed in and is energized as soon as any one of the other buttons is pushed in.

While I have shown and described a particular embodiment of my invention, it will be obvious to those skilled in the art that various changes and modifications may be made without departing from my invention in its broader aspects and I therefore aim in the appended claims to cover all such changes and modifications as fall within the true spirit and scope of my invention.

What I claim as new and desire to secure by Letters Patent of the United States is:

1. A push button switch comprising a base, contact means supported on the base, means for actuating the contact means comprising a plurality of slides having cam surfaces and a plurality of push buttons cooperatively associated with the slides, each push button comprising a fabricated plunger made from a single piece of sheet metal by a punching and forming process, said plunger having side, front and rear walls the side walls forming at one end lugs with openings and the rear wall forming at an opposite end a cylindrical pin extending toward the front wall for engaging the slides, and a light-reflecting prism-shaped member made from transparent material and having side walls with projections fitting the openings of said lugs.

2. A push button for switches comprising a fabricated plunger having integral front, rear and side walls made from a single piece of sheet material, the rear wall having end extensions, the extension at one end forming a cylindrical pin extending toward the front wall and being spaced therefrom, the extension at the other end forming a bead, and each of the side walls at one end having a slot opening towards said pin and at the other end having extensions forming lugs with openings.

3. A push button for switches comprising a fabricated plunger having integral front, rear and side walls made from a single piece of sheet material, the rear wall having end extensions, the extension at one end forming a cylindrical pin extending towards the front wall and being spaced therefrom, the extension at the other end forming a bead, each of the side walls having a slot at one end opening towards the pin and extensions at the other end forming lugs with openings, and a transparent button having lateral projections supported on the lugs and an end portion seated on said bead.

4. A push button for switches comprising a fabricated plunger having integral front, rear and side walls made from a single piece of sheet material, the rear wall having extensions at its opposite ends, the extension at one end forming a cylindrical pin extending towards the front wall and being spaced therefrom, the side walls having slots at one end opening towards the pin and extensions at the other end forming lugs with openings, and a reflecting prism-shaped member supported in said openings, said member having a reflecting inner end with a plurality of parallel grooves and at an obtuse angle to its rear wall whereby a beam of light perpendicular to the front wall of said member is reflected from said inner end towards the outer end of the member.

5. A push button switch comprising a base, contact means supported on the base, means including a push button slidably in the base for actuating said contact means, said push button having a transparent manually operable element which has a light reflecting surface for reflecting light rays directed onto it lengthwise through said element and also said button having an opaque fabricated switch actuating member arranged in alignment with said element, means attaching said element to said actuating member whereby it is supported thereby, an adaptor having an opaque casing secured to said base provided with a wall spaced from said base and having an opening slidably receiving and supporting said element and said adaptor also having a sec-

ond wall substantially parallel to the line of movement of said element and actuating member, a source of light, and said actuating member and second wall having cooperating window and closure means therefor functioning in one position of said button to shield said transparent element from said light source and in a second position to admit light rays from said source to said reflecting surface.

JOHN LEWIS ANDREWS.

REFERENCES CITED

The following references are of record in the file of this patent:

UNITED STATES PATENTS

Number	Name	Date
2,232,582	Woods	Feb. 18, 1941