May 15, 1928. 1,670,061

J. CARROLL

APPARATUS FOR APPLYING SPIRAL WRAPPINGS

Filed April 13, 1927 2 Sheets-Sheet 1

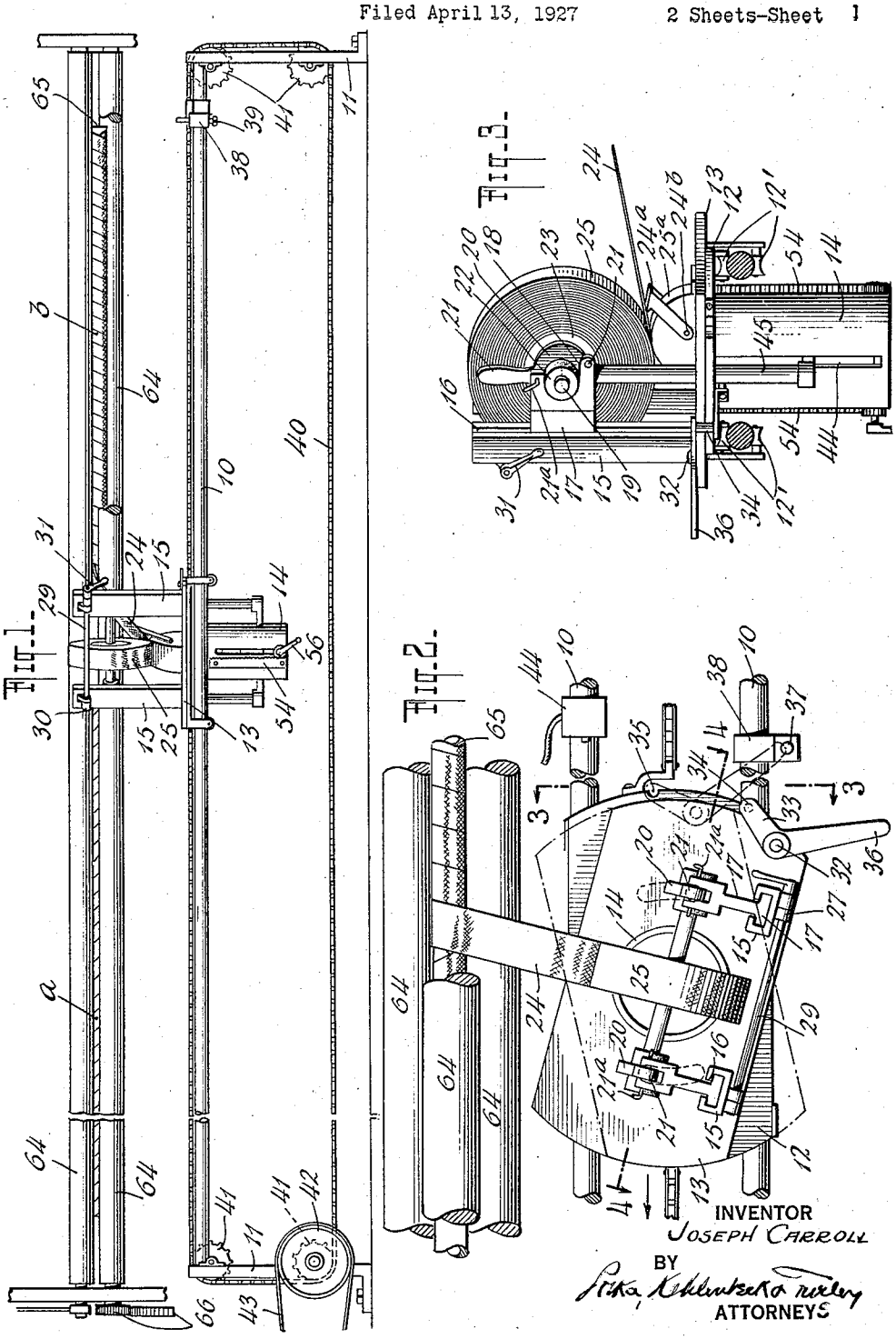

INVENTOR
JOSEPH CARROLL
BY
Pitka, Kehlenbeck & Tuxley
ATTORNEYS

May 15, 1928. 1,670,061

J. CARROLL

APPARATUS FOR APPLYING SPIRAL WRAPPINGS

Filed April 13, 1927 2 Sheets-Sheet 2

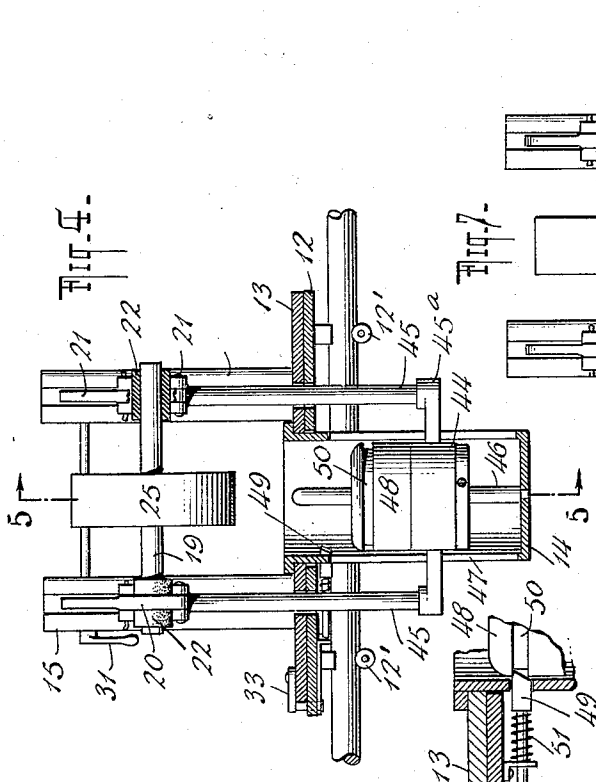

Fig. 4.

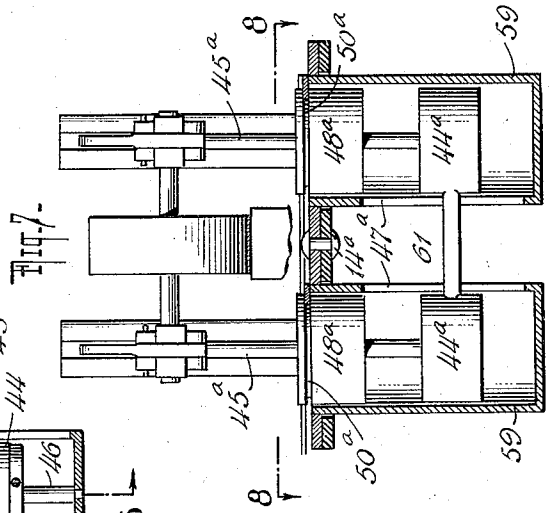

Fig. 7.

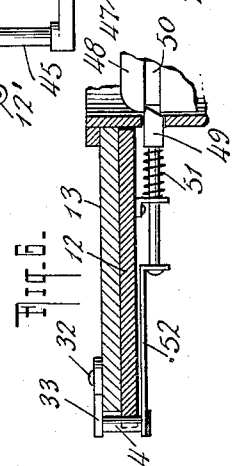

Fig. 6.

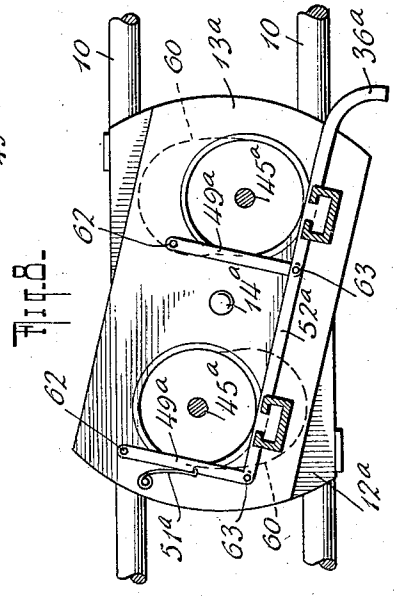

Fig. 8.

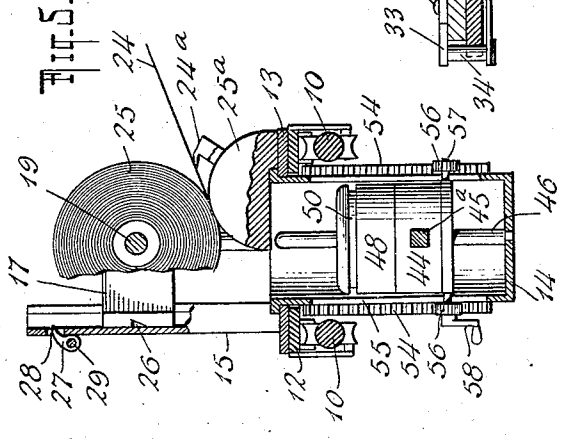

Fig. 5.

INVENTOR
JOSEPH CARROLL
BY
Foster & Freeman & Watson
ATTORNEYS

Patented May 15, 1928. 1,670,061

UNITED STATES PATENT OFFICE.

JOSEPH CARROLL, OF BROOKLYN, NEW YORK, ASSIGNOR TO SPADONE MACHINE COMPANY, INC., OF NEW YORK, N. Y., A CORPORATION OF NEW YORK.

APPARATUS FOR APPLYING SPIRAL WRAPPINGS.

Application filed April 13, 1927. Serial No. 183,287.

The invention relates to the art of spirally wrapping rubber hose, tubing, rubber covered rolls and the like with one or more wrappings of material prior to the curing or vulcanizing or other finishing treatment of the hose or other article. In practice the hose or other article to be wrapped may be mounted in any suitable manner for rotation about its axis. Up to the present the material to be spirally wrapped upon the hose or other article, has been mounted in the form of a roll upon a spindle adapted to be carried in the hands of an operator who is compelled to manually manipulate the roll of material in oblique or other predetermined relation to the article to be wrapped. The end of the wrapping material, which generally is in a wet condition having been previously caused to adhere to the hose or other article, the latter as it rotates will cause the aforesaid material to be spirally wound upon said hose or other article. If, as is generally the case, an additional wrapping is to be applied upon the first wrapping, the operative relation of the roll of material in the hands of the operator is reversed when a predetermined point in the hose or other article is reached and the operator at the same time varies the manipulation of said roll of material accordingly.

The second wrapping is generally wound upon the previous wrapping in reversed spiral relation thereto. Obviously with such manual application of the wrapping or wrappings, the control exercised by the operator is bound to vary with the result that the tensional strain applied to the material as it is being wound upon the hose or other article will be uneven and consequently will result in an inefficient and defective application of the wrapping. The object of the present invention is to overcome these objections and to provide an apparatus whereby the wrapping or wrappings may be mechanically and automatically applied to the hose or other article in a uniform and most efficient manner. Other objects of the invention will appear from the description hereinafter and the features of novelty will be pointed out in the claims.

In the accompanying drawings which illustrate examples of the invention without defining its limits, Fig. 1 is a front elevation of the wrapping apparatus in operative relation to a hose being wrapped; Fig. 2 is a fragmentary plan view; Fig. 3 is a detail section approximately on the line 3—3 of Fig. 2; Fig. 4 is a longitudinal detail section approximately on the line 4—4 of Fig. 2; Fig. 5 is a detail section on the line 5—5 of Fig. 4; Fig. 6 is an enlarged fragmentary section showing a latching device included in the apparatus; Fig. 7 is a vertical section illustrating another form of the device, and Fig. 8 is a horizontal section thereof on the line 8—8 of Fig. 7.

The apparatus in its illustrated form comprises a guideway which is shown in the form of two bars or rods 10 located in spaced parallel relation and carried by supporting members 11 at a predetermined height. A carrier adapted to deliver the wrapping material in oblique relation to the hose is arranged to move lengthwise of the rods 10 and in the illustrated example consists of a slide 12 slidably mounted on the rods 10 and a support 13 pivotally connected at 14 with the slide 12 to oscillate about an axis perpendicular to the slide; in order to facilitate the travel of the slide 12 along the rods 10, said slide is preferably mounted on said rods by means of rollers 12′. Uprights 15 are fixed upon the support 13 in perpendicular relation thereto and are slotted lengthwise as indicated at 16 for slidably accommodating bearing brackets 17 as shown in Figs. 2 and 3. The bearing brackets are formed with outwardly open recesses 18 in which a spindle 19 is arranged to be journalled, suitable provision being made to maintain said spindle against unintentional removal from the recesses 18; in the illustrated example the means in question comprises clamps 20 pivoted at 21 on the brackets 17 and provided with operating handles 21 to facilitate the manipulation of said clamps; the latter are locked in their operative positions in any convenient manner as by means of pins 21ª removably inserted through registering apertures in the brackets 17 and clamps 21 as shown in Fig. 2. In order to prevent the spindle 19 from rotating with undesired freedom, friction sleeves 22 are located upon the spindle 19 in the recesses 18 and are held thereon by the aforesaid clamps 20, as shown in Fig. 3. The arrangement is such that the axis of the spindle 19 extends in a direction parallel with the major median line of the support 13 and preferably in registry therewith.

The spindle 19 is adapted to receive a spool 23 carrying a supply of wrapping material 24 in the form of a roll 25. The latter, when occupying its operative position, rests upon and in surface engagement with a preferably curved friction member 25^a rigidly fixed upon the support 13 as shown in Fig. 5. In the preferred construction provision is made for maintaining the bearing brackets 17 in a raised position on the uprights 15 in order to facilitate the mounting and removal of spools 23 upon and from the spindle 19; for this purpose the bearing brackets 17, as shown in Fig. 5, may be provided with notches 26 adapted to be engaged by pawls 27 which normally project into the slots 16 through openings 28 formed in the uprights 15. The pawls are fixed upon a shaft 29 rotatably mounted in bearings 30 on the uprights 15 and provided with an operating handle 31, or its equivalent, to enable the pawls 27 to be adjusted to their inoperative positions when it is desired to release the bearing brackets 17. Suitable provision is made for automatically maintaining and returning the pawls 27 in and to their operative positions; for instance, the handle 31 may be arranged to accomplish this by gravity.

The roll 25 generally speaking is made up of a plurality of lengths of material 24, the ends of which are in adhering overlapping relation to each other. In order to separate these overlapping ends to prevent the material 24 from being wrapped about the hose therewith, a device 24^a is pivoted at 24^b and is pressed against the lower surface of the material 24 as it passes from the roll 25. When an overlapping connection between two sections of material reaches the device 24^a, the latter serves by peeling off the one section to separate said two sections; as soon as the one section is completely wound upon the hose, the free end of the next succeeding section is fastened in place on the hose and the winding proceeds.

The support 13 is arranged to occupy two operative positions extending diagonally to the slide 12 in opposite directions whereby the supply of wrapping material or more specifically the axis of rotation of the roll 25, that is the spindle 19, extends obliquely to the guideway consisting of the rods 10 and the wrapping material is delivered to the hose in predetermined oblique relation thereto. While the pull upon the material 24 during the wrapping will ordinarily be sufficient to maintain the support 13 in either one of its two diagonal positions, it is preferred to provide a means for definitely locking said support in each one of said operative positions. In the illustrated example this means is shown in the form of a bell-crank lever pivoted at 32 upon the support 13 and having one arm 33 provided with a depending pin 34 arranged to co-operate with notches 35 formed at the proper points in the one end edge on the slide 12, as shown in Fig. 2. The aforesaid locking means further constitutes a switch and includes a switch arm 36, the purpose of which will appear more fully hereinafter.

In those instances where more than one wrapper is applied to the hose the diagonal position of the support 13 on the slide 12 and consequently the oblique relation of the material 24 to the hose being wrapped is automatically reversed when a predetermined point on the hose is reached. In the construction shown in the drawings this is accomplished by means of the switch arm 36 which engages a stop 37 adjustably mounted on one of the rods 10 by means of a block 38 which is secured in an adjusted position in any suitable manner as for instance, by means of a set screw 39; the operation of this part of the apparatus will appear more fully hereinafter.

The carrier, that is, the slide 12 with the support 13 and its associated elements is moved lengthwise of the guide rods 10 by means of any suitable mechanism, which, in the drawings, is shown in the form of a sprocket chain 40 having its opposite ends connected to the slide 12 and passing over sprocket wheels 41 journalled on the supports 11 as shown in Fig. 1. Motive power is applied to the chain 40 in any convenient manner capable of creating a reversed motion in said chain as required; in the drawings this means comprises a pulley 42 mounted to rotate with one of the sprockets 41 and connected by means of a belt 43 with an electric motor or other device. In order to reverse a travel of the carrier and its associated elements coincidentally with the shifting of the support 13 from one of its diagonal positions to another, a suitable reversing switch 37^a is adjustably mounted upon one of the rods 10 so as to be operated at the proper time by the slide 12.

In order to maintain the material 24 under an even tension during the wrapping of the hose so as to insure an even and uniform wrapping thereof, means is provided whereby the tensional strain is applied to said material during the wrapping.

In the form of the invention illustrated in Figs. 1 to 6 inclusive, the aforesaid tensional strain is developed through the medium of a weighted means comprising a weight 44 carried by a frame 45 depending from the bearing brackets 17 as shown in Fig. 4. In the preferred arrangement, the weight 44 is vertically slidable upon an upright guiding rod 46 within a cylinder depending from the support 13 through an aperture in the slide 12, and in addition to its other functions comprising the pivotal axis 14 about which the support 13 oscillates; the afore-

said cylinder has accordingly been designated with the reference character 14. As shown in Figs. 3 and 4, the cylinder 14 is provided with diametrically opposite vertical slots 47 for the accommodation of the cross bar 45ª which forms part of the frame 45. In order to provide an increased tension on the wrapping material for instance, during the application of a given wrapper, a second weight 48 is slidably mounted upon the rod 46 in superimposed relation to the weight 44. For the purpose of suspending the second weight 48 in an inoperative position during such times as the tension producing effect of the weight 44 alone is desired, a latch 49 is arranged to project into the cylinder 14 and into an annular groove 50 with which the weight 48 is provided. The latch 49 is mounted in and restored to its operative position by means of a spring 51 and is connected through the medium of a link 52 and pin 34 with the arm 33 of the switching device 33—36.

With this arrangement the weight 48 is capable of being suspended in an inoperative position at a distance above the weight 44 as indicated in Fig. 6 and the latch 49 will be operated to release said weight 48 coincidentally with the actuation of the switching device 33—36 in the performance of its several functions.

As shown in Figs. 3 and 5 provision is made for easily and quickly raising the weight 48 into position to be inoperatively suspended by the latch 49 when this is desired. For this purpose racks 54 are fixed at diametrically opposite points exteriorly of the cylinder 14 as shown in Fig. 5 and extending lengthwise thereof adjacent to slots 55 with which the cylinder 14 is provided. Pinions 56 are mounted upon a shaft 57 journalled in the tension developing means as shown in Fig. 5 and are arranged to travel lengthwise of the racks 54; a crank handle 58 is fixed on the shaft 57 to facilitate the rotation of the pinions 56.

It will be obvious that as the crank handle 58 is rotated in the proper direction the pinions 56 will be caused to travel upwardly along the racks 54 and will consequently raise the weights 44 and 48 until the groove 50 of the latter comes into registry with the latch 49 which thereupon will snap into said groove and retain the weight in its elevated position. After the suspension of the weight 48 in its inoperative position has been accomplished, the weight 44 and its associated elements may be permitted to return to their normal position.

In the form shown in Figs. 7 and 8, the support 13ª is pivotally mounted upon the slide 12ª by means of a pivot pin 14ª and two cylinders 59 similar to the cylinder 14 depend from the support 13ª through slots or apertures 60 provided in the slide 12ª and curved in arcs having the pivot pin 14ª as a center. The weighted means whereby the tension on the wrapping material is developed, in this form of the invention, comprises a pair of weights 44ª suspended from the bearing brackets 17 by means of members 45ª so as to be vertically movable in the cylinders 59; in the preferred arrangement the weights 44ª are connected by means of a connecting member 61 which extends through slots 47ª with which the cylinders 59 are provided. Additional weights 48ª, similar in purpose to the weight 48 previously described, are suspended in inoperative positions by means of a latching device consisting of members 49ª pivoted at 62 upon the support 13ª and pivotally connected at 63 with a link 52ª forming part of the switch 36ª as shown in Fig. 8. The latching devices 49ª are arranged to extend into annular grooves 50ª with which the weights 48ª are provided as in the form first described, a spring 51ª being provided for maintaining the latching devices 49ª in, and returning them to their normal positions.

In practice the wrapping apparatus is located, either as a component part of the hose winding machine or as an apparatus independent thereof, in operative relation to the means whereby the hose to be wrapped is rotatably actuated; this means, as shown in Fig. 1, may comprise a plurality of rolls 64 between which hose 65 is supported on a suitable mandrel. The rollers are rotated by suitable gearing 66 so as to continuously rotate the hose 65 upon its axis. In operation, the bearing blocks are raised to an elevated position in which they are held by the pawls 27 engaging the notches 26 in order to permit a roll 25 of wrapping material to be placed upon the spindle 19 and the latter to be set into the recesses 18 of the bearing blocks 17. The pawls 27 are then actuated to release the bearing blocks 17 and permit the roll 25 to descend into surface engagement with the friction member 25ª, the action of the weight 44 will cause the roll 25 to press against the friction member 25ª to thereby develop a resistance to the unwinding of the material 24 which, as a result, is placed under a tensional strain and accordingly is applied to the hose under such strain. To start the wrapping operation, the carrier, with the roll 25 thereon, is shifted, for instance, toward the extreme left in Fig. 1, if it does not already occupy such position and the support 13 is adjusted to the position indicated by dotted lines in Fig. 2. The end of the wrapper 24 because of the fact that it is wet is then caused to adhere to the hose so that at this stage the material 24 is located in a position to be delivered from the roll 25 to the hose 65 in oblique relation thereto. As the hose is now caused to rotate about its axis the material 24 will

be withdrawn from the roll 25 and will be wound or wrapped upon said hose; the endless chain 40 being at the same time actuated to cause its upper run to travel toward the right in Fig. 1, the carrier with the roll 25 thereon will be drawn along or shifted lengthwise of the rods 10 and consequently lengthwise of the hose in the same direction over a fixed path parallel with said hose, as shown in Fig. 1. As a result of this a first wrapping *a* will be spirally wrapped upon the hose. At a predetermined point depending upon the location of the block 38 on the rod 10, the switch arm 36 will engage the stop 37 and will be shifted thereby to first remove the pin 34 from the notch 35, as will be clear from an inspection of Fig. 2. As the movement of the carrier, or more specifically the slide 12 and support 13, continue toward the right in Fig. 1, the stop 37 will exert a camming action on the switch arm 36 which will swing the support 13 on its pivot 14 to the diagonal position shown by full lines in Fig. 2. At the same time the reversing switch 37ª will be operated to reverse the direction of travel of the chain 40 to thereby cause the carrier and the roll 25 to travel in the opposite direction along the rods 10. Coincidentally with the above described actuation of the switch arm 36, the latching device 49 by means of the link 52 and pin 34 will be withdrawn to an inoperative position and thereby permit the weight 48 to drop into engagement with the weight 44. As the oblique delivery relation of the material 24 to the hose has been reversed a second wrapping *b* will be applied to the hose upon the first wrapping *a* and in reverse spiral relation thereto as the carrier travels to the left in Fig. 1.

It will be noted that during the travel toward the right in Fig. 1 the weight 44 alone is effective to develop a tensional strain upon the material 24, while during the travel toward the left in Fig. 1 the effect of the weight 48 has been added so that the tensional strain upon the wrapping material is automatically increased. As a result of this arrangement, the second wrapper *b* is very closely and securely wrapped about the first wrapper *a* and thereby produces a most satisfactory product. When the carrier reaches its extreme position at the left in Fig. 1, the diagonal position of the support 13 is again reversed by manual operation of the switch 36 to again bring the support 13 to the dotted line position in Fig. 2 and to restore the delivery relation of the wrapping 24 to the hose as it originally was.

The operation of the apparatus shown in Figs. 7 and 8 is the same as that above described, with the exception that as the switch 36ª engages the stop 37 to reverse the diagonal position of the support 13ª, the latching devices 49ª will be coincidentally and simultaneously actuated to release both weights 48ª. The latter may be lifted to an elevated position to be again engaged by said latching devices 49ª, through the medium of the cross bar 61. As shown in Fig. 8 the apparatus is constructed in a form in which the pull of the wrapping material 24 as it passes from the roll 25 to the hose is relied upon to maintain the support 13ª and its associated elements in its diagonal positions on the slide 12ª. In other words, the locking means 33—34 of the form first described are omitted.

While I have shown and described the apparatus in a form adapted particularly for wrapping hose, it will be understood that it is equally well adapted for wrapping other articles such as tubing, rubber covered rolls etc. In addition, it will be obvious that a hose being wrapped may be otherwise supported and manipulated than shown, to produce the desired results.

The apparatus is extremely simple in construction and efficient in operation and operates to provide the hose or other article with one or more wrappings in reverse spiral relation to each other, under an even uniform tension which may be increased with successive wrappings. The wrapping apparatus may be incorporated as a part of existing hose or other wrapping machines or it may comprise a unit independent of such machines and capable of being set up in operative relation thereto.

Various changes in the specific forms shown and described may be made within the scope of the claims without departing from the spirit of the invention.

I claim:

1. An apparatus for wrapping a rotating hose, comprising a guideway defining a fixed path lengthwise of and parallel with the rotating hose, a carrier on said guideway, a roll of wrapping material mounted on said carrier to rotate about an axis oblique to said guideway whereby wrapping material from said roll is delivered in oblique relation to the hose, means whereby said carrier and roll are shifted lengthwise of said guideway in one direction to spirally wrap the hose with said material, a switch on said carrier, a stop adjustably mounted on said guideway co-operating with said switch to reverse the oblique relation of the axis of rotation of the roll of material to said guideway, and means whereby the direction of travel of said carrier on said guideway is coincidentally reversed to apply a second wrapping upon the first wrapping in reversed spiral relation thereto.

2. An apparatus for wrapping a rotating hose, comprising a guideway defining a fixed path lengthwise of and parallel with the rotating hose, a carrier on said guideway, a roll of wrapping material mounted

on said carrier to rotate about an axis oblique to said guideway whereby wrapping material from said roll is delivered in oblique relation to the hose, means whereby said carrier and roll are shifted lengthwise of said guideway in one direction to spirally wrap the hose with said material, a switch on said carrier, a stop adjustably mounted on said guideway co-operating with said switch to reverse the oblique relation of the axis of rotation of the roll of material to said guideway, means whereby the direction of travel of said carrier on said guideway is coincidentally reversed to apply a second wrapping upon the first wrapping in reversed spiral relation thereto, means including a weighted device for applying a tensional strain to said material during the first wrapping, and additional weighted means controlled by said switch and released thereby coincidentally with the reversal of the oblique direction of the axis of rotation of said roll of material to increase said tensional strain during the second wrapping.

3. An apparatus for wrapping a rotating hose, comprising a guideway defining a fixed path lengthwise of and parallel with the rotating hose, a slide movable lengthwise of said guideway, a support pivotally mounted on said slide to oscillate about an axis perpendicular to said slide and normally occupying a position diagonal thereto, slotted uprights carried by said support, bearing brackets slidably mounted on said slotted uprights, a spindle for a roll of wrapping material journalled in said bearing brackets and defining an axis of rotation oblique to said guideway whereby the wrapping material from said roll is delivered in oblique relation to the hose, means whereby said slide is shifted lengthwise of said guideway in one direction to apply one wrapping spirally to the hose, means whereby the diagonal position of the support on said slide is reversed to reverse the oblique delivery relation of said material to the hose and whereby the direction of travel of said slide on said guideway is coincidentally reversed to apply a second wrapping upon the first wrapping in reversed spiral relation thereto, and means whereby different tensional strains are automatically applied to said material during the two wrapping operations.

4. An apparatus for wrapping a rotating hose, comprising a guideway defining a fixed path lengthwise of and parallel with the rotating hose, a slide movable lengthwise of said guideway, a support pivotally mounted on said slide to oscillate about an axis perpendicular to said slide and normally occupying a position diagonal thereto, slotted uprights carried by said support, bearing brackets slidably mounted on said slotted uprights, a spindle for a roll of wrapping material journalled in said bearing brackets and defining an axis of rotation oblique to said guideway whereby the wrapping material from said roll is delivered in oblique relation to the hose, means whereby said slide is shifted lengthwise of said guideway in one direction to apply one wrapping spirally to the hose, means whereby the diagonal position of the support on said slide is reversed to reverse the oblique delivery relation of said material to the hose and whereby the direction of travel of said slide on said guideway is coincidentally reversed to apply a second wrapping upon the first wrapping in reversed spiral relation thereto, a weight connected with said bearing brackets for applying a tensional strain to the material during the first wrapping, a second weight suspended in an inoperative position during said first wrapping, and means operated concurrently with the reversal of travel of said slide to release said second weight whereby said tensional strain on said wrapping material is automatically increased during the second wrapping.

5. An apparatus for wrapping a rotating hose, comprising a guideway defining a fixed path lengthwise of and parallel with the rotating hose, a slide movable lengthwise of said guideway, a support pivotally mounted on said slide to oscillate about an axis perpendicular to said slide and normally occupying a position diagonal thereto, slotted uprights carried by said support, bearing brackets slidably mounted on said slotted uprights, a spindle for a roll of wrapping material journalled in said bearing brackets and defining an axis of rotation oblique to said guideway whereby the wrapping material from said roll is delivered in oblique relation to the hose, means whereby said slide is shifted lengthwise of said guideway in one direction to apply one wrapping spirally to the hose, means whereby the diagonal position of the support on said slide is reversed to reverse the oblique delivery relation of said material to the hose and whereby the direction of travel of said slide on said guideway is coincidentally reversed to apply a second wrapping upon the first wrapping in reversed spiral relation thereto, a pair of connected weights depending from said bearing brackets for applying a tensional strain to the material during the first wrapping, a plurality of independent weights suspended in inoperative positions during said first wrapping, and means operated concurrently with the reversal of travel of said slide to release said weights whereby said tensional strain on the wrapping material is automatically increased during the second wrapping.

6. An apparatus for wrapping a rotating hose, comprising a guideway defining a fixed path lengthwise of and parallel with the

rotating hose, a slide movable lengthwise of said guideway, a support pivotally mounted on said slide to oscillate about an axis perpendicular to said slide and normally occupying a position diagonal thereto, slotted uprights carried by said support, bearing brackets slidably mounted on said slotted uprights, a spindle for a roll of wrapping material journalled in said bearing brackets and defining an axis of rotation oblique to said guideway whereby the wrapping material from said roll is delivered in oblique relation to the hose, means whereby said slide is shifted lengthwise of said guideway in one direction to apply one wrapping spirally to the hose, a switch on said support, a stop adjustably mounted on said guideway co-operating with said switch to reverse the diagonal position of the support on said slide, whereby the oblique delivery relation of the material to the hose is reversed, means whereby the direction of travel of said slide on said guideway is coincidentally reversed to apply a second wrapping upon the first wrapping in reversed spiral relation thereto, weighted means depending from said bearing brackets for applying a tensional strain to said material during the first wrapping, a second weighted means, latching means whereby said second weighted means is suspended in an inoperative position during the first wrapping, and a connection from said switch to said latching means whereby the latter is operated to release said second weighted means when the switch is operated by said stop, to thereby increase the tensional strain on said material during the second wrapping.

7. An apparatus for wrapping a rotating hose, comprising a guideway defining a fixed path lengthwise of and parallel with the rotating hose, a carrier on said guideway, a roll of wrapping material mounted on said carrier to rotate about an axis oblique to said guideway whereby wrapping material from said roll is delivered in oblique relation to the hose, a friction member against which said roll in its operative position rests in surface engagement, means whereby the pressure of said roll against said friction member is increased to apply a tensional strain to said material during the wrapping operation, and means whereby said roll is suspended in an inoperative position out of contact with said friction member.

In testimony whereof I have hereunto set my hand.

JOSEPH CARROLL.