Feb. 14, 1967 J. R. WILKINS 3,303,946

FEEDING MECHANISM FOR CHARCOAL MAKING RETORT

Filed Sept. 18, 1964

Fig. 1.

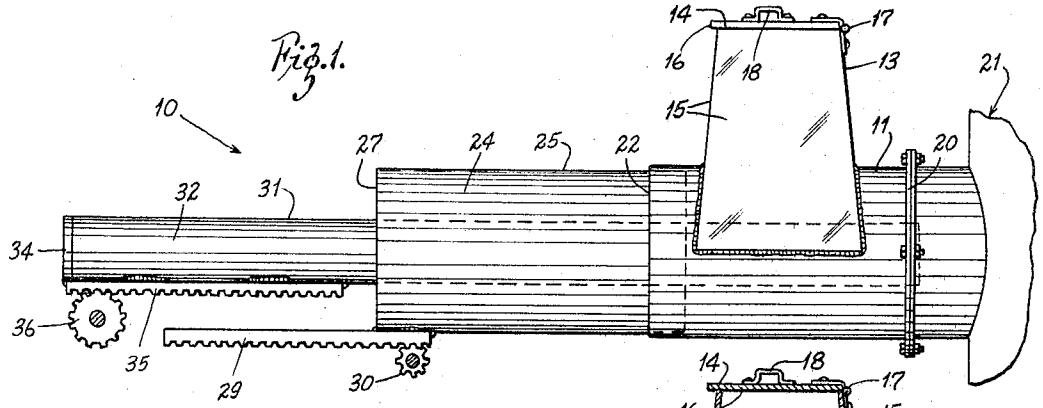

Fig. 2.

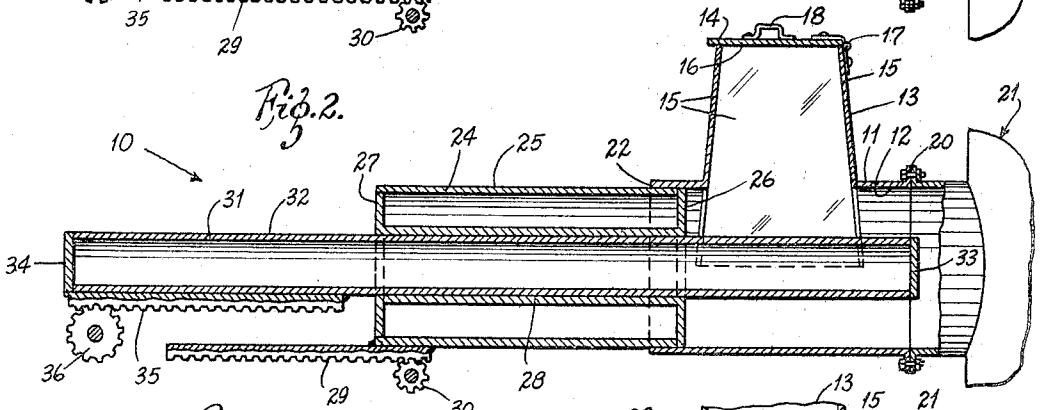

Fig. 3.

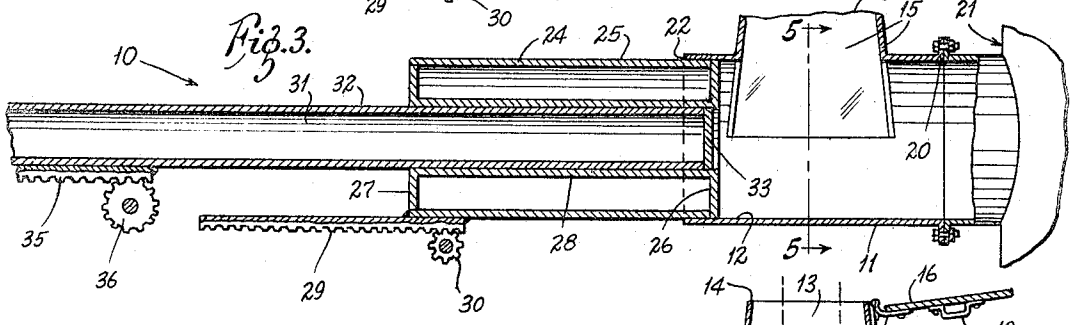

Fig. 4.

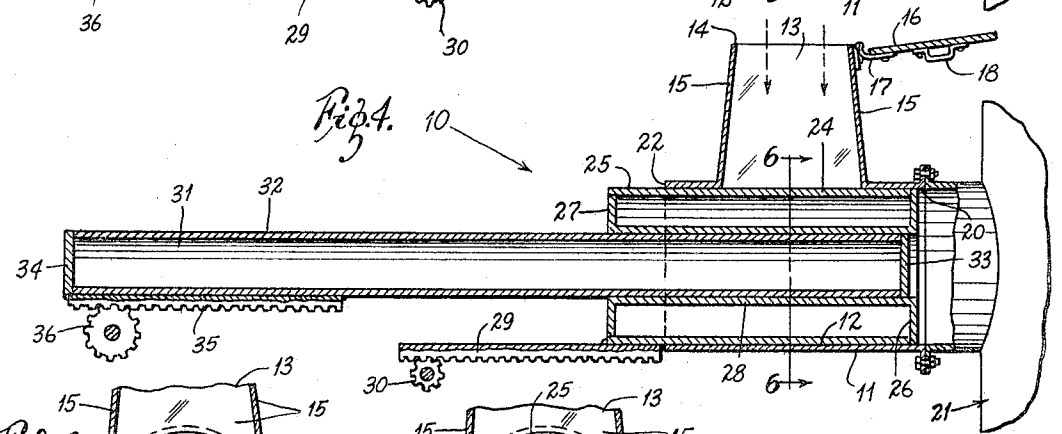

Fig. 5.

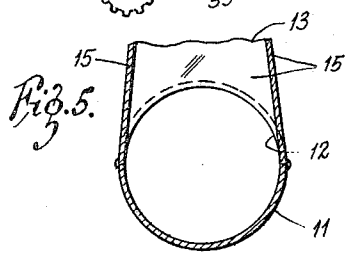

Fig. 6.

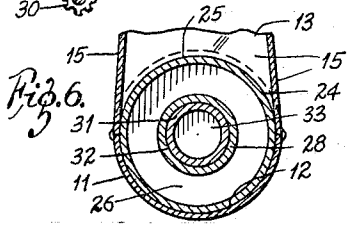

INVENTOR:
JOHN RILEY WILKINS,
BY Kingsland, Rogers, Ezell,
Eilers & Robbins
ATTORNEYS

United States Patent Office 3,303,946
Patented Feb. 14, 1967

3,303,946

FEEDING MECHANISM FOR CHARCOAL MAKING RETORT

John Riley Wilkins, Steelville, Mo., assignor to Harwood Charcoal Company, Steelville, Mo., a corporation of Missouri

Filed Sept. 18, 1964, Ser. No. 397,387
3 Claims. (Cl. 214—23)

This invention relates to a charcoal loading and charging system of the kind connected to charge wood to a charcoal producing furnace or retort. In general, the invention includes a hopper connected into a housing for receiving wood. The housing has a lateral opening connected to a furnace or retort. A power driven charging piston is reciprocable through the housing to charge wood from the housing into the retort; and a clearing piston driven by a separate power source is reciprocable through the housing to clear remaining wood from the housing before refilling the hopper.

A particular feature of the invention is the provision of a sealing means to prevent the escape of combustion gases from the furnace through the hopper. The hopper has a lid on it that normally seals this escape of combustion gases. However, the lid must be opened when wood is to be fed into the hopper. On the other hand, the clearing piston serves the dual function of clearing wood from the housing into the furnace while sealing the escape of gases to the hopper when the hopper door is open.

The general object of this invention is to provide a charcoal loading and charging assembly with means to load wood into a hopper, means to charge the wood from the housing below the hopper into a furnace, and means to clear the remaining wood from the housing into the furnace, wherein the clearing means also provides a seal against the escape of combustion gases while the hopper is being loaded. Other objects will appear to those skilled in the art.

In the drawing:

FIGURE 1 is a side elevation view of the charcoal loading and charging assembly;

FIGURE 2 is a view in longitudinal vertical section of the charcoal loading and charging assembly with the charging piston shown in extended position and the clearing piston shown in retracted position;

FIGURE 3 is a fragmentary view in section similar to that of FIGURE 2 but with both the charging and clearing pistons shown in retracted positions;

FIGURE 4 is a view in section similar to that of FIGURES 2 and 3 but with both the charging and clearing pistons shown in extended positions, and with the hopper door open for replenishing wood used to make charcoal;

FIGURE 5 is a view in section taken along the line 5—5 of FIGURE 3; and

FIGURE 6 is a view in section taken along the line 6—6 of FIGURE 4.

Referring now to the drawing, the invention **10** comprises a housing **11** having an inner wall **12** which is preferably cylindrical. The shape of the outer wall of the housing **11** is not critical. A hopper **13** opens into the interior of the housing **11**. The hopper **13** has an upper edge **14** defined by the upper edges of its side walls **15**. The side walls **15** diverge from the upper edge **14** toward the area of communication with the interior of the housing **11**. There is a cover **16** for the hopper **13**, the cover **16** being connected to a side **15** of the hopper **13** by hinge means **17**. There is a handle **18** on the cover **16** to facilitate opening and closing it for introducing wood into the hopper **13**.

The housing **11** into which wood is deposited by way of the hopper **13** has one side **20** connected directly to a furnace or retort **21** which is shown only partially and schematically in the drawing. The opposite end **22** of the housing **11** is also open.

A clearing piston **24** is slidable within the housing **11**. The clearing piston **24** has a cylindrical outer surface **25** that fits within the cylindrical inner surface **12** of the housing **11**. The clearing piston **24** has a front wall **26** and a rear wall **27** with a central cylindrical passage **28** which extends from the front wall **26** to the rear wall **27**. A toothed rack **29** is welded or otherwise connected to the clearing piston **24**. A pinion **30** meshes with the rack **29**, the pinion **30** being driven and controlled by an external power and control system which is not shown in the drawing.

A charging piston **31** is received within the passage **28** in the clearing piston **24**. The charging piston **31** has a cylindrical outer surface **32** that slides within the passage **28**. The charging piston **31** also has a front end **33** and a rear wall **34**. A rack **35** is welded to the charging piston **31**, and a pinion **36** meshes with the rack **35**. The pinion **36** is driven and controlled by an external system not shown on the drawing.

Operation

With the furnace **21** fired up the clearing piston is reciprocated to the position illustrated in FIGURE 4, and the door **16** is opened on its hinges **17** to permit the introduction of wood into the hopper. Location of the clearing piston **24** as shown in FIGURE 4 seals against the flow of gases from the furnace **21** to the hopper **15**. These gases are normally present in charcoal producing furnaces or retorts. A feature of this invention is the fact that such gases are always prevented from escaping to the open air.

Once the hopper **15** is loaded, the lid **16** is closed onto the upper edges **14** of the sides **15**. Then, the lid **16** prevents the escape of gases to the atmosphere. The clearing piston is retracted to the position shown in FIGURE 2. The charging piston **31** is then reciprocated slowly to drive wood into the furnace or retort **21**. This reciprocation of the charging piston **31** continues until most of the wood has been charged into the furnace **21**. Then, the piston is withdrawn to the position illustrated in FIGURE 3 where its leading end **33** is virtually aligned with the leading end **26** of the clearing piston **24**. Then both the clearing piston **24** and the charging piston **32** are moved to the positions illustrated in FIGURE 4 to completely clear the housing **11** of wood. With the clearing piston **24** in the position shown in FIGURE 4, the lid **16** can again be opened without permitting gases to escape, and the hopper **13** can again be filled with wood for repeating the entire process.

Various changes and modifications may be made within the purview of this invention as will be readily apparent to those skilled in the art. Such changes and modifications are within the scope and teaching of this invention as defined by the claims appended thereto.

What is claimed is:

1. A solid fuel loading and charging system adapted to be connected to a retort comprising a hopper for receiving pieces of solid fuel, a housing below the hopper, the housing having a hollow chamber communicating with the hopper and having diametrically opposite open ends, and with a substantially constant cross section between the ends, one end being connected to the retort, a clearing piston having a substantially constant cross section substantially equal in size and shape to that of the housing chamber, the clearing piston being slidable within the housing chamber from the end opposite the one connected to the retort, and a charging piston of smaller

cross sectional area than that of the housing chamber and the clearing piston, the charging piston being slidable within the clearing piston, the charging and clearing pistons being connected for independent reciprocation.

2. A solid fuel loading and charging device comprising a housing having a tubular inner wall defining a cylindrical chamber, a hopper connected to the housing and having an open lower end for feeding fuel by gravity into the housing, one end of the chamber being connected to a retort, the other end of the chamber being open, a cylindrical clearing piston slidable from the open end through the chamber between withdrawn and clearing positions, and a charging piston being slidable within the clearing piston, the clearing piston being longer than the lower end of the hopper and having a diameter only slightly less than that of the chamber to alternately block and unblock communication between the hopper and the chamber when the clearing piston is moved between the clearing and withdrawn positions, the charging piston having a diameter substantially less than that of the chamber.

3. A solid fuel loading and charging assembly comprising a housing, a retort connected to the housing, an opening to the housing enabling the feeding of fuel into the housing, a lid for covering the opening, other means to feed fuel from the housing to the retort, and means separate from the feeding means to clear the remaining fuel from the housing into the retort, the clearing means also providing a seal against the escape of combustion gases from the housing when the lid is moved from the opening while the housing is being replenished with fuel.

References Cited by the Examiner

UNITED STATES PATENTS

2,004,533	6/1935	Maynard.	
2,567,397	9/1951	Pfau	214—23

GERALD M. FORLENZA, *Primary Examiner.*

ROBERT G. SHERIDAN, *Examiner.*