United States Patent

Venable et al.

[15] 3,674,183

[45] July 4, 1972

[54] **DISPENSING DEVICE**

[72] Inventors: **Herny B. Venable; Catherine M. Venable,** both of Box 144, Chadds Ford, Pa. 19317

[22] Filed: **Feb. 1, 1971**

[21] Appl. No.: **111,544**

[52] **U.S. Cl.** **222/212,** 222/490, 222/564

[51] **Int. Cl.** **B65d 37/00**

[58] **Field of Search** 222/562, 541, 212, 215, 213, 222/490, 564; 215/40, 56

[56] **References Cited**

UNITED STATES PATENTS

2,720,881	10/1955	Jones	222/490 X
2,957,501	10/1960	Holmes	222/212

Primary Examiner—Richard A. Schacher
Assistant Examiner—James M. Slattery
Attorney—Roylance, Abrams, Berdo and Kaul

[57] **ABSTRACT**

A dispersing valve comprises a disc having a sinuous slit which is cut at an angle with respect to the face of the disc to form at least two, and preferably three, valve members, one of which is larger than the other one or two and is designed to permit passage of fluid when the container to which the valve is attached is compressed. The at least one other valve permits excess fluid and air to return to the interior of the container when it is released. The multiple valve arrangement is formed by the angular nature of the slit, permitting highly efficient dispensing and resealing action.

5 Claims, 10 Drawing Figures

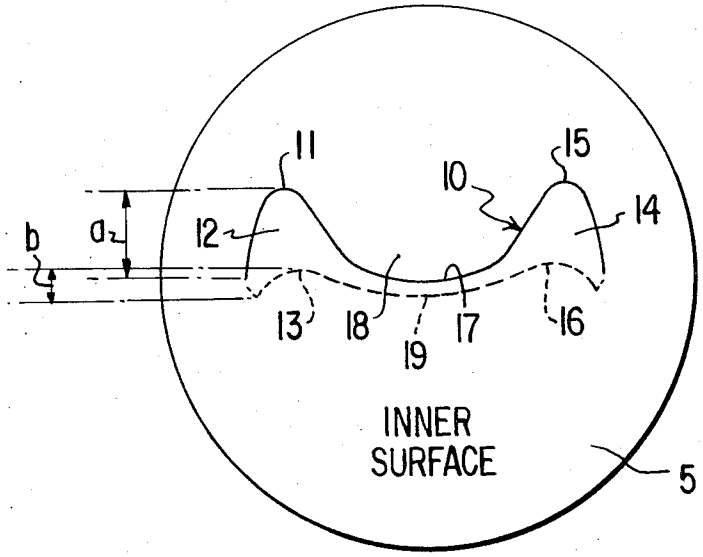

FIG. 1

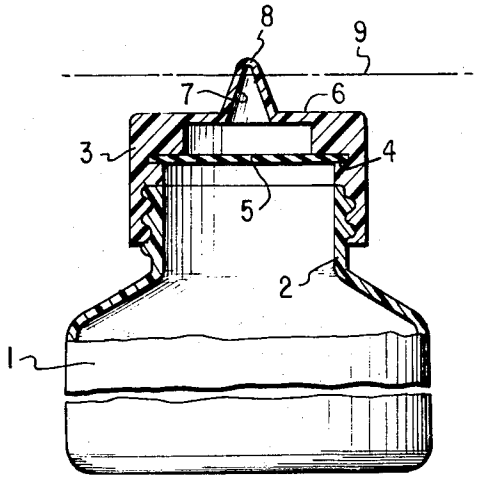

FIG. 2

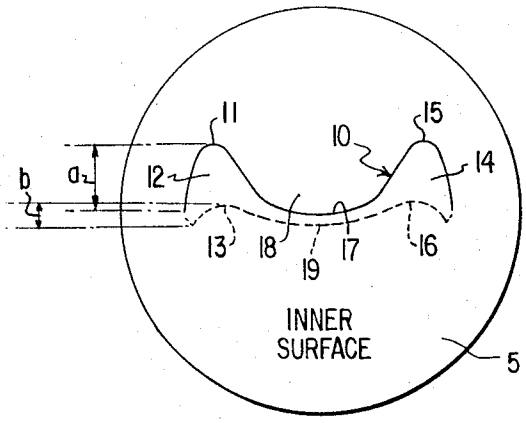

FIG. 4

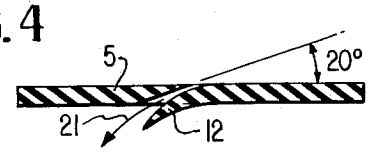

FIG. 5

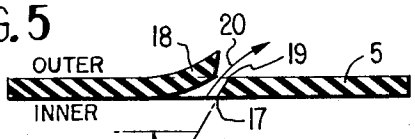

FIG. 6

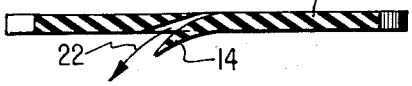

FIG. 3

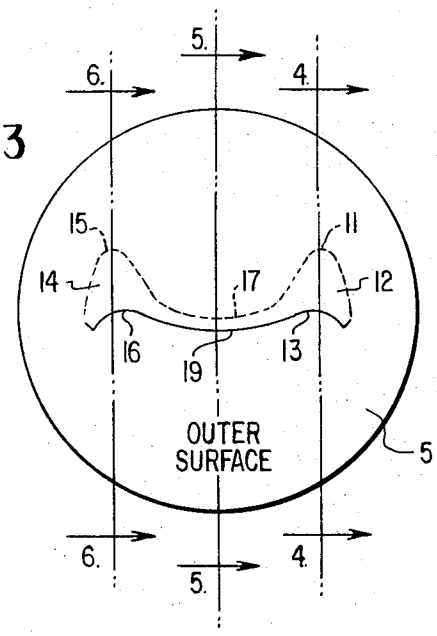

FIG. 7

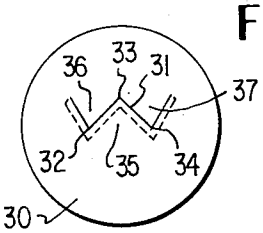

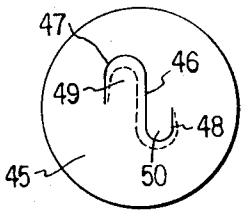

FIG. 9

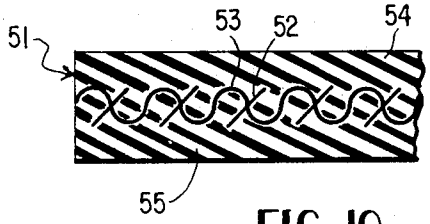

FIG. 10

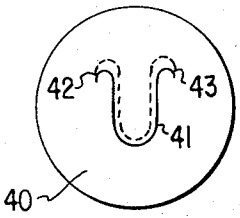

FIG. 8

INVENTORS.
HENRY B. VENABLE
CATHERINE M. VENABLE

BY Roylance, Abrams, Berdo & Kaul
ATTORNEYS.

DISPENSING DEVICE

This invention relates to dispensing apparatus and specifically to a valve apparatus for use in a flexible container whereby fluids of various viscosities can be dispensed.

For many years a number of prior art workers have been concerned with the design of a valve of a type which would, when applied to a flexible wall container, permit liquids of various viscosities, up to and including pastes, to be dispensed by reducing the volume of the container, squeezing the material through the valve. There are many patents dealing with this general subject including patents showing discs having slits cut therein whereby the material is forced against the wall of a disc, distorting the slit and permitting material to pass therethrough.

Many problems have developed with disc and slit valves of this type including the tendency of material to remain on the exterior surface of the slit after dispensing, whereupon the material would dry and inhibit further action of the dispensing mechanism. An additional problem is that the material, once dried, would become lodged in the opening on the occasion of a subsequent dispensing operation, thereafter holding the valve open and preventing the necessary sealing operation, whereupon the material within the container would evaporate or change characteristics, leading to degeneration of the product in the container.

In any of these circumstances it is possible to use one of the prior art valves in conjunction with a closing cap or other mechanism so that the container is sealed by the secondary cap, thereby preventing drying or degeneration of the contained material. However, the use of an additional cap effectively does away with the need for a valve, it being simpler to simply provide a cap which closes a simple pouring spout.

An object of the present invention is to provide a disc type valve structure in which a plurality of valves are provided to dispense material therethrough and provide a good seal after dispensing.

A further object is to provide a valve structure which permits material to be expressed therethrough by a flexible wall container and which, after dispensing, recovers excess material and substantially prevents deposits of material on the exterior portion of the valve.

A still further object is to provide a multiple valve structure in which one valve acts as a dispensing valve and at least one other valve is provided adjacent thereto to withdraw excess material from the outside of the valve into the container.

A further object is to provide a valve structure wherein a plurality of valves are formed by a continuous slit in a resilient disc member, the valve formed being operative to promote dispensing and cleaning of the valve as the container associated therewith is compressed and released.

In order that the manner in which the foregoing and other objects are attained in accordance with the invention can be understood in detail, particularly advantageous embodiments thereof will be described with reference to the accompanying drawings which form a part of this specification and wherein:

FIG. 1 is an elevation in section of a valve disc mounted in the cap of a flexible bottle;

FIG. 2 is a plan view of a disc valve in accordance with the invention, the view being that from the interior of a container;

FIG. 3 is a plan view of the disc of FIG. 2 from the exterior of the container;

FIG. 4 is a section along 4—4 of FIG. 3;

FIG. 5 is a section along diameter 5—5 of FIG. 3;

FIG. 6 is a section along lines 6—6 of FIG. 3;

FIGS. 7–9 are alternative embodiments of disc valves in accordance with the present invention; and

FIG. 10 is an enlarged section of a portion of a valve disc showing a suitable structure for the disc.

Briefly described, the present invention provides a valve structure formed by slitting a disc along a generally sinuous line to form at least two, and preferably three, valve members. One valve member is larger than the other one or two valve members. Each valve member is formed by a slit which is

slanted with respect to the major plane of the disc, or, phrased differently, the slit can be described as being formed by the movement of a line lying at an acute angle with the plane of the disc as it moves with respect to the disc axis.

The term "disc" as used herein refers to a substantially flat body of resilient material but is not necessarily limited to a circular disc. Clearly, oval, rectangular or other perimetral shapes can be employed although circular discs will be disclosed herein for simplicity.

Referring now to the drawings, it will be observed that FIG. 1 shows a conventional container 1 which is generally referred to as a "squeeze bottle" and can be made of any conventional materials such as polyethylene, polypropolene or the like. The specific material employed for construction of the bottle is relatively unimportant, the significant aspect being that the bottle is flexible and can be compressed to reduce the interior volume thereof and to force material contained therein out of the bottle.

The bottle includes a neck portion 2 which can be exteriorly threaded to receive an interiorly threaded cap 3 which closes the open neck of the bottle and supports a disc valve in accordance with the present invention. The cap includes an interior annular groove 4 into which can be placed a disc 5 including the present valve structure. The upper portion of the cap is closed by a transverse end wall 6 which includes a central protrusion 7 having an end portion 8 which can be severed along a line indicated by dotted line 9 after purchase to produce a permanent opening in the end of the cap. Thereafter, the volume of the bottle is separated from the exterior of the bottle only by the valve structure of disc 5.

The manner in which a preferred embodiment of the valve structure is formed can be seen more clearly in FIGS. 2 and 3, FIG. 2 being a view of disc 5 from the interior of the bottle and FIG. 3 being a view of the same disc as it would be seen from the exterior of the bottle. The valves are formed by a sinuous slit or cut indicated generally at 10, the cut on the inner surface of the disc describing a linear shape which can be characterized as having two hills separated by a relatively broad valley. One "hill" 11 of the cut forms a valve portion 12, the seat for which constitutes a slanted surface extending between the hill portion 11 and the opening of that portion of the cut at the other surface of the disc at 13. Valve portion 12 thus hinges along a line which approximately follows opening point 13 of the cut but is also slanted through the thickness of the disc on approximately the same angle as the cut.

At the other end of the cut a second small valve 14 is formed by the "hill" 15 of the cut, the opening of that portion of the cut on the opposite side of the disc being identified at 16.

The central portion 17 of the cut forms a substantially larger valve 18, the opening of cut portion 17 on the back surface of the disc being identified as 19. As viewed in FIG. 2, valves 12 and 14 tend to open in a direction which is out of the paper, while valve 18 opens more easily in a direction which would be into the paper as viewed in FIG. 2. The contrary condition exists in FIG. 3.

The action of these valves can be seen most easily by referring to FIGS. 4–6 in which sectional views of each valve are shown. Referring first to FIG. 5, it will be observed that as the bottle is compressed, air and/or liquid contained within the bottle is forced against the inner surface of disc 5, pressing against the inner surface of valve 18 and forcing it away from its seat, permitting material to pass through in the direction of arrow 20. In FIGS. 4 and 6 valves 12 and 14 are forced open when material has been expressed from the bottle and the natural resilience of the walls thereof is working to restore the bottle to its original condition, causing a decreased pressure within the container and an increased pressure outside of the container. The increased external pressure forces valves 12 and 14 open, permitting the influx of air as shown by arrows 21 and 22, respectively. Arrows 21 and 22 also indicate the path followed by any excess liquid which is allowed to remain in the cavity between valve 5 and end wall 6 of the cap (FIG.

1), thus cleaning the outer surface of the cap and especially the region along the slit which forms valve **18**. It will be observed that the cleaning action in the valve wherein a single cut forms all three valves is substantially more efficient than in a structure in which the valves are formed by separate cuts because the liquid remaining outside of the valve disc tends to follow and remain adjacent this cut. Thus, when valves **12** and **14** are open excess material lying along the portion of cut **10** identified as **19** will tend to flow along the cut to portions **13** and **16** and be withdrawn back into the bottle by the influx of air.

The relationship of the slanted cut or slit to the major plane of the disc can be understood more clearly from a description of the lines formed at the inner and outer surfaces of disc **5**. The line formed by the cut at the inner surface of the disc can be analogized to an electrical sine wave having a specific peak-to-peak amplitude, that amplitude being comparable to the total excursion of the line or the distance "a" in FIG. **2**. The analogy is not a precise one because the "wave" formed by the line is not truly cyclic, valve **18** being wider than the others; but with this difference being understood, the analogy is reasonably close.

Then, the line formed by the opening of the cut on the opposite (outer) surface of the disc can be regarded as a sinuous wave having the same phase as the line on the inner surface, but having a much smaller amplitude indicated as "b" in FIG. **2**. Also, the line on the outer surface is displaced laterally from the one on the inner surface, resembling a displacement (continuing the analogy) in DC level of one wave with respect to the other.

The lateral displacement (downward in FIGS. **2** and **3**) and the difference in amplitude are the result of the angles at which the valves are cut. The angle of the portion between slit openings **17** and **19** is approximately 70° with respect to either disc face, while the angle formed by each of the small valves is about 20°. These are preferred angular relationships and have been found to be highly effective in nursing bottles and in medicine and liquid soap dispensing bottles.

As shown in the drawings, each valve-forming cut lies entirely within the peripheral confines of the body. However, it will be recognized that, for convenience, it may be desirable to form the valves with a cut which severs the body into two parts, after which the structure is essentially made unitary again by clamping the edges, as with annular rings.

It will be observed that as a direct result of the cleaning action and the superior seating action resulting from the formation of these valves by slanted cuts, dropping or shaking the bottle does not permit material contained therein to be sprayed or jarred out of the bottle, there being no excess to lie outside of the disc and insufficient force to open the valve.

An alternative embodiment of the invention can be seen in FIG. **7** wherein the slit in a valve disc **30** is of a generally sinuous nature but forms relatively sharp peaks rather than gentle curves. However, a similar configuration results and a likewise similar result is obtained in a structure wherein a slit **31** alternates between peaks **32**, **33** and **34**, each portion of the cut being slanted in a manner similar to that described with reference to FIGS. **2–6**, forming a central main valve portion **35** and smaller valve portions **36** and **37**, valve **35** being the valve by which material is expressed from the interior of the bottle and valves **36** and **37** functioning to permit the return of excess material and air into the bottle. It will be observed that disc **30**, as viewed in FIG. **7**, is seen from the exterior of the bottle.

A further embodiment is shown in FIG. **8** wherein the cut, again generally sinuous in character, forms a central valve with a central U-shaped slit **41** in a disc **40**. Smaller discs are formed by inverted U-shaped cut portions **42** and **43**, producing the smaller valves to permit reentry of excess material and air into the bottle after the desired amount has been expressed through the main valve formed by the portion **41** of the slit.

Yet another embodiment is shown in FIG. **9** in which a disc **45** contains a slit **46** which is similar to the slit in disc **40** of FIG. **8** in that it has a major U-shaped portion **47** and a smaller valve formed by a smaller U-shaped slit portion **48** at one end of slit **46**. As will be recognized in view of the above discussion, the valve structure in disc **45** includes only two valves, a large valve **49** formed by portion **47** and a smaller valve **50** formed by portion **48**. Although this embodiment is not regarded as being as efficient as those previously discussed, it constitutes an alternative approach which is also advantageous.

FIG. **10** shows a section of a portion of one of the discs disclosing a specific laminate structure which is especially desirable for use in the discs discussed with reference to FIGS. **2–9**. In FIG. **10** the disc indicated generally at **51** includes a central fiber layer including orthogonally extending fibers **52** and **53** forming a fabric layer through the center of and sandwiched between layers of elastomer **54** and **55**. Typical suitable elastomers include such materials as polybutidiene or polychloroprene, the major characteristic being a flexibility and resilience which permits good sealing action and a restoration of the material to its original form.

While certain advantageous embodiments have been chosen to illustrate the invention it will be understood by those skilled in the art that various changes and modifications can be made therein without departing from the scope of the invention as defined in the appended claims.

What is claimed is:

1. A multiple valve structure comprising

a planar body of resilient material; and

a continuous, nonorthogonal cut extending through said body from one major surface thereof to the other major surface thereof,

said cut opening at one major surface in a first line having a generally sinuous pattern and having at least two lateral reversals in direction in the plane of said one major surface,

said cut opening at the other major surface in a second line having a generally sinuous pattern and having at least two lateral reversals in direction in the plane of said other major surface, and

the lateral excursions of said first line being significantly greater than the lateral excursions of said second line,

each of said excursions forming an independently operable valve member, adjacent ones of said valve members being operable by fluid pressure applied to opposite major surfaces of said planar body.

2. A structure according to claim **1** wherein

the valve member formed by one excursion of said first and second lines is characterized by a significantly greater surface area than the valve member formed by an adjacent excursion.

3. A structure according to claim **1** wherein

said cut extends through said body at an angle of between 20° and 70° with respect to said major surfaces.

4. A structure according to claim **1** wherein

each end of said cut lies within said body.

5. A structure according to claim **1** wherein

each of said first and second lines forms a sawtooth pattern in which each lateral reversal is an acute angle.

* * * * *