Dec. 19, 1967 D. KASS 3,359,003

GAME BOARD FOR CHECKERS OR CHESS HAVING NO SIDE BORDERS

Filed May 5, 1965 2 Sheets-Sheet 1

FIG. 1

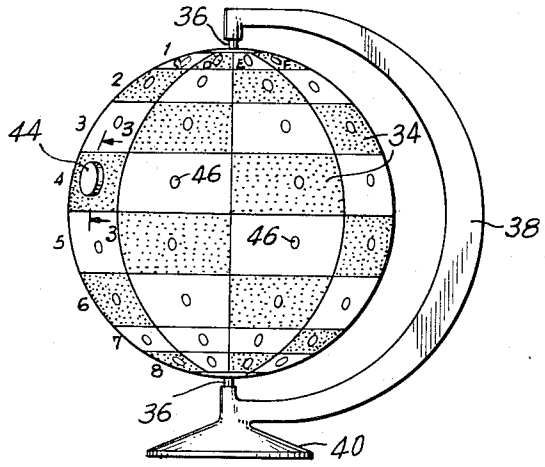

FIG. 2

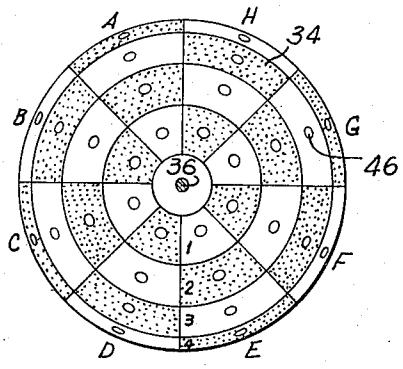

FIG. 3

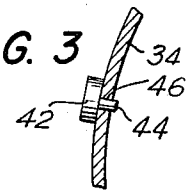

FIG. 4

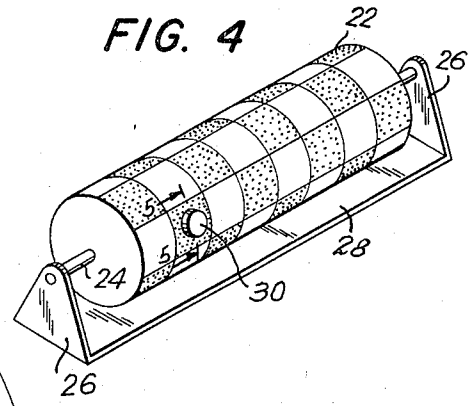

FIG. 6

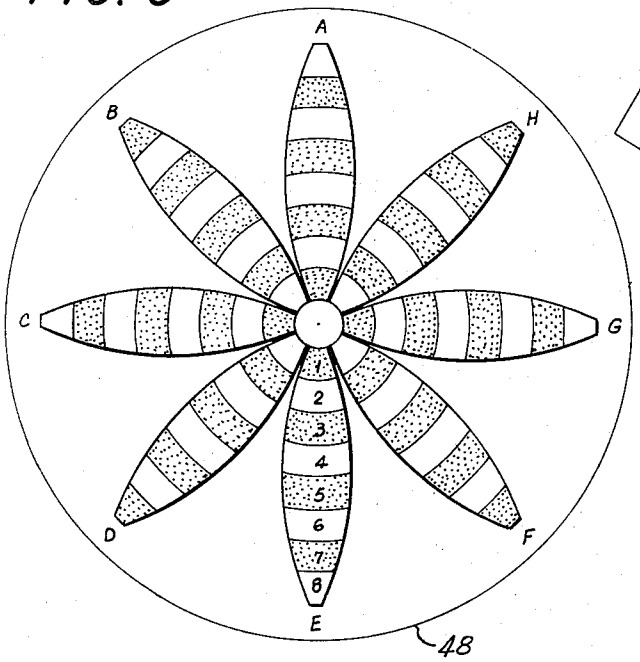

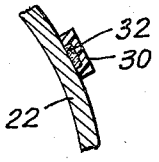

FIG. 5

INVENTOR.
DAVID KASS

BY James and Franklin

ATTORNEYS

Dec. 19, 1967 D. KASS 3,359,003

GAME BOARD FOR CHECKERS OR CHESS HAVING NO SIDE BORDERS

Filed May 5, 1965 2 Sheets-Sheet 2

FIG. 8

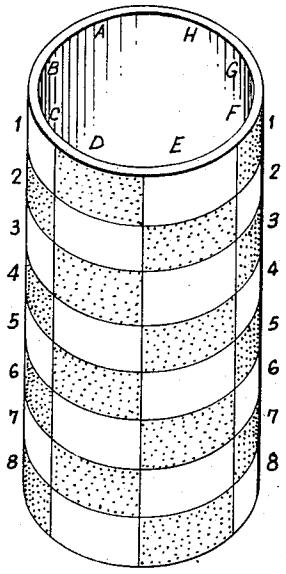

FIG. 7

PRIOR ART

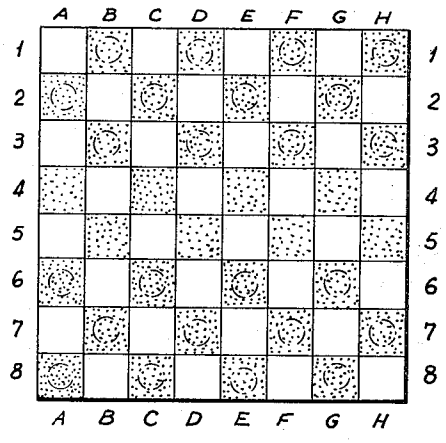

FIG. 9

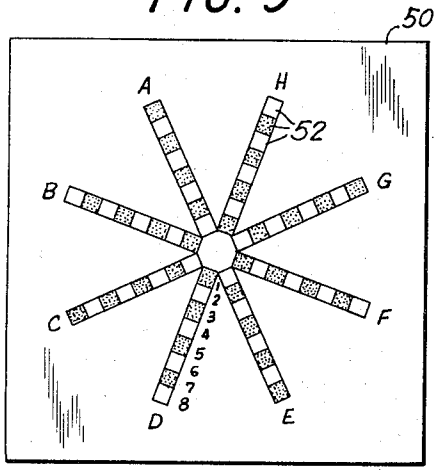

FIG. 10

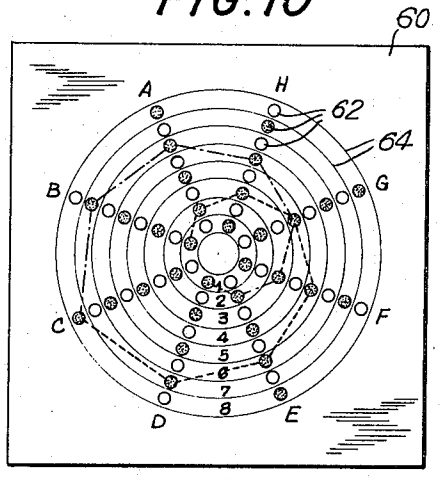

FIG. 11

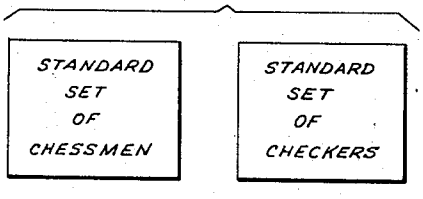

INVENTOR.
DAVID KASS

BY James and Franklin

ATTORNEYS

United States Patent Office 3,359,003 Patented Dec. 19, 1967

3,359,003

GAME BOARD FOR CHECKERS OR CHESS HAVING NO SIDE BORDERS

David Kass, Roosevelt, N.Y., assignor to Original Toy Corporation, Brooklyn, N.Y., a corporation of New York

Filed May 5, 1965, Ser. No. 453,327
6 Claims. (Cl. 273—131)

ABSTRACT OF THE DISCLOSURE

The game apparatus comprises game pieces, as in checkers or chess, and a preferably rotatable globe or cylinder having a playing surface marked with sixty-four playing positions divided into the usual eight ranks and the usual eight files, which for identification may be considered lettered from A to H, but file A is disposed adjacent file H in such fashion that, unlike the usual square board, there are no side borders. One player starts at rank **1** and plays toward rank **8**, and the other player starts at rank **8** and plays toward rank **1**, in usual fashion, but with new avenues of attack and retreat, and with no trapping at side borders. The playing surface and the game pieces have cooperative means to hold the game pieces in position on the globe or cylinder. In another form the game board may be flat, with the sixty-four playing positions arranged in radial files and ranks disposed on concentric circles.

This invention relates to games, and more particularly to apparatus for the playing of checkers and chess.

The general object of the invention is to improve game apparatus for the playing of chess and/or checkers. A more particular object is to retain the conventional chessmen and/or checkers, and the conventional number of playing positions or "squares," and the conventional rules of play, while opening up new avenues of attack and retreat by eliminating the usual side borders.

Further objects of the invention are to embody the game apparatus in varied forms, such as a globe or a cylinder. Ancillary objects are to mount the structure for rotation, and to provide means to hold a playing piece in position.

To accomplish the foregoing general objects, and other more specific objects which will hereinafter appear, my invention resides in the game apparatus, and the elements thereof and their relation one to another, as are hereinafter more particularly described in the following specification. The specification is accompanied by drawings in which:

FIG. 1 is an elevational view of a game apparatus in spherical form, embodying features of the invention;

FIG. 2 is a plan view of the sphere shown in FIG. 1, omitting the crescent;

FIG. 3 is a fragmentary section drawn to enlarged scale and taken on the line **3—3** of FIG. 1;

FIG. 4 is a perspective view of a game apparatus in the form of a cylinder;

FIG. 5 is a fragmentary section drawn to enlarged scale and taken on the line **5—5** of FIG. 4;

FIG. 6 shows a game apparatus derived from the sphere shown in FIGS. 1 and 2, but in which the playing surface is flat.

FIG. 7 shows a conventional square gameboard, numbered and lettered to help explain the new gameboard;

FIG. 8 is a perspective view of a cylindrical structure with similar numbering and lettering;

FIG. 9 illustrates a gameboard embodying one form of my improvement;

FIG. 10 shows another gameboard embodying another form of my improvement; and

FIG. 11 represents conventional sets of playing pieces,

that is, chessmen or creckers, to be used with the illustrated structures.

Referring to the drawing, and more particularly to FIG. 7, a conventional gameboard for the playing of chess and checkers is square in outline, having four sides equal in length, and having upon its surface sixty-four "squares" or playing positions alternately colored light and dark; there being thirty-two of each. It is common to call the squares black and white even though other dark and light colors are used. The sixty-four playing postions are arranged to form eight horizontal rows of eight positions each, referred to as "ranks," and eight vertical columns of eight positions each, referred to as "files." In FIG. 7 the ranks are numbered numeracially from one through eight, and the files are lettered alphabetically from A through H.

To play chess, the board of FIG. 7 is used with thirty-two conventional light and dark chessmen (King, Queen, Rooks or Castles, Knights, Bishops, and Pawns). To play checkers, the board is used with twenty-four conventional light and dark playing pieces commonly called checkers. These same conventional chessmen and/or checkers are employed here, and because it is unnecessary to draw them in detail, they are schematically illustrated in FIG. 11 by a rectangular box for a set of each. In FIG. 7 the broken line circles represent a conventional set of twenty-four checkers, twelve for each side; one side being colored dark and the other light.

Referring now to FIG. 8, a board such as that shown in FIG. 7 may be rolled into a cylinder as shown in FIG. 8, thereby bringing the edge file A adjacent the edge file H, in such fashion that, unlike a conventional board, there are no side borders. The numbers and letters correspond to those shown in FIG. 7. If desired, the board shown in FIG. 7 may be preliminarily elongated sideward, that is, changed from square to rectangular, with the individual playing positions similarly changed from square to rectangular, to provide a cylinder of greater diameter. It will be understood that one player starts at rank one and plays toward rank eight, and the other player starts at rank eight and plays toward rank one, all in conventional fashion.

However, as a result of the two side edges being eliminated, entirely new forms of play become possible. Trapping of an opponent's playing piece becomes more difficult because an avenue of retreat is open. The ability to freely cross back and forth between file A and file H opens entirely new avenues of attack.

A cylinder such as that shown in FIG. 8 may be handled manually, and may be left vertical or horizontal, but it is convenient to mount the same for rotation, and such an arrangement is shown in FIG. 4, in which the cylinder **22** is mounted on a shaft **24** carried in bearings **26** formed at the ends of a base **28**. As before, there are eight files extending in axial direction, and eight ranks disposed circumferentially. The opponents play from opposite ends of the cylinder.

It will be evident that with this structure some means must be provided to hold a playing piece in position on the cylinder. One way to do this is by use of magnetism, and in the present case the cylinder **22** is assumed to be made of a ferrous material, and the playing pieces **30** are magnetized or have small embedded magnets as indicated at **32** in FIG. 5. The body of the playing pieces may be made of a suitable molded plastic material. The cylinder **22** may be drawn or cast, but in simplest form may be made of ferrous sheet metal rolled to the desired cylindrical configuration.

The structure may be spherical instead of cylindrical, and such an arrangement is shown in FIGS. 1 and 2 of the drawing. In this case the files **34** are in the direction of meridians, that is, they extend from top to bottom as

mounted in FIG. 1, while the ranks are in the direction of latitudes, that is, horizontal as shown in FIG. 1. The numbers and letters for the playing positions correspond to those shown in FIGS. 7 and 8. Thus, one player plays from the region of the North Pole toward the South Pole, and the other player plays from the region of the South Pole toward the North Pole.

The sphere may be handled manually, but is preferably mounted for rotation, and in FIG. 1 it rotates on pivots **36** carried by crescent-shaped support **38** mounted on a base **40**. The parts **38** and **40** are omitted in FIG. 2.

Here again it is important to have cooperative means to hold a playing piece in position on the structure, and referring to FIG. 3 in this case the piece **42** has a peg **44** while the sphere **34** has a mating hole **46** to frictionally receive the peg **44**. In FIGS. 1 and 2 it will be seen that each of the sixty-four "squares" or playing positions has a hole like the hole **46**, and it will be understood that each playing piece has a peg like the peg **44**. It may be mentioned that if the sphere is to be used solely for checkers, and not chess, the holes may be omitted in the light squares, and provided only in the dark squares.

It will be understood that the magnetic arrangement shown in FIGS. 4 and 5 may be used on a spherical structure, and that the peg arrangement shown in FIG. 3 may be used on a cylindrical structure. These retention means are merely illustrative. It will also be understood that the middle of the crescent **38** (FIG. 1) may be mounted on the base **40** so that the sphere is disposed with its axis horizontal, as shown for the cylinder **22** in FIG. 4, instead of being disposed with its axis vertical as shown in FIG. 1.

The sphere of FIG. 1 may be considered to be assembled of eight segments secured edge to edge, as is commonly done for example in the making of globes representing the earth. The present game apparatus may be provided in flat form by detaching the segments and flattening the same radially, as shown in FIG. 6 of the drawing. In this case the files, marked A through H as before, are disposed radially, and the ranks, marked one through eight, are disposed on concentric circles. One player starts at the center and plays from the center outward, while the other player plays from the outside toward the center. The transition from the structure shown in FIGS. 1 and 2 to that shown in FIG. 6 it is believed will be self-evident. The board could be petal-shaped, or more practically could be square, or round as shown at **48**.

With the files disposed radially the playing positions again may be made squares, if desired, and such an arrangement is shown in FIG. 9, in which the board **50** has eight radial files, and eight ranks disposed on concentric circles. The squares are marked **52**. The numbers and letters correspond to those shown in FIGS. 6, 7, and 8.

However, there is no need for the playing positions to be square, and they may be rectangular, elliptical or circular, and the latter arrangement is shown in FIG. 10, in which the board **60** has eight radial files, and eight ranks disposed on concentric circles, with the individual dark and light positions being round as indicated at **62**, instead of being square as shown at **52** in FIG. 9.

Because of the separation of the files at their outer ends the board may be provided with light concentric circles such as those indicated at **64** in FIG. 10, to help define the ranks. Moreover, the board may be additionally provided with differently colored spiral lines representing the equivalent of the diagonals of a conventional square board such as that shown in FIG. 7. One such spiral is shown by a dot-dash line, starting at position **D1**, and running to position E2, then to position F3, then G4, H5, A6, B7, and terminating at position C8. Another such spiral line or "diagonal" is shown by a dotted line starting at position C8 and running to position D7, then to position E6, then F5, G4, H3, A2, and terminating at position **B1**. It will be understood that similar spiral lines or "diagonals" may be provided running both ways from

A8, from B8, from D8, and so on, and terminating at the inner rank (rank **1**). The "diagonals" may differ in color to help follow the same more readily.

This incidentally illustrates one difference between the present structure and a conventional square board like that shown in FIG. 7, because in the square board there are only two full length diagonals, the other diagonals being shortened, whereas in my structure there are sixteen full length diagonals, that is, all of the diagonals are of full length and alike.

It will be understood that the concentric circles, like those shown at **64** in FIG. 10 to help define the ranks, may be provided in FIG. 6 and/or in FIG. 9, and similarly, the differently colored spiral lines or "diagonals" represented by the dotted and dot-dash lines in FIG. 10, also may be provided in FIG. 6 and/or in FIG. 9.

It will be observed that my game apparatus does not add or subtract a single playing position from the conventional board. Inasmuch as the same number of "squares" is retained, all of the games that are played on the conventional board can be played on my new apparatus. This applies to chess and checkers, using the same two opposing players and using the same number of playing pieces, and making generally similar moves. Chess players and checkers players may begin playing with the new apparatus without having to familiarize themselves with a different or new game, or different or new playing pieces, or different or new rules. However, the actual moves may differ greatly because the structural change embodied in the new apparatus makes possible new moves, with enhanced challenge and pleasure.

It will be understood that the surface divisions or playing positions may be marked by raising sections, or by recessing sections, or by inlaying pieces, or by any of the known screening and printing processes. The peg arrangement of FIG. 3 or the magnetic arrangement of FIG. 5 may be used with a flat gameboard, in miniature or travel forms of the game apparatus. The broken spiral lines shown in FIG. 10 may be curved or truly spiral, instead of a series of short straight lines.

The playing positions may be identified by file letters and rank numbers, as an aid in recording for future reference the moves that are made during a game. Such identification markings may be provided either adjacent or within the playing positions, and each marking may be repeated for all of the positions, or may be indicated only at groups of related positions.

The numbers **1** through **8** are used in the drawings to indicate ranks, and the letters A through H are used to indicate files, but it will be understood that other designations could be used. In the drawing no attempt has been made to distinguish between a black or white square when applying the numbers and letters, a number being intended for the entire rank of black and white squares, and a letter being intended for the entire file of black and white squares.

In the flat form of the apparatus shown in FIGS. 6, 9, and 10 the area of the vacant circle at the center may be enlarged somewhat, and may be provided with a small graphic representation or map of the world. This creates the image of the world being under attack by the outside pieces, while the inside or opposing pieces are defending it. Inasmuch as the games of chess and checkers are sometimes likened to games of war, for some players the "attack" and "defense" image enhances the realism and interest aroused by the game.

It is believed that the construction and method of use of my improved game apparatus, as well as the advantages thereof, will be apparent from the foregoing detailed description. It will also be apparent that while I have shown and described the apparatus in a number of different forms, changes may be made without departing from the scope of the invention, as sought to be defined in the following claims.

I claim:

1. A game apparatus comprising a set of game pieces, and a globe having a playing surface marked with sixty-four playing positions divided into eight ranks, and eight files which for identification may be considered lettered A to H, with file A disposed adjacent file H in such fashion that there are no side borders, the files being in the direction of meridians, and the ranks being in the direction of latitudes, whereby one player plays from the region of the North Pole toward the South Pole, and the other player plays from the region of the South Pole toward the North Pole.

2. A game apparatus comprising a set of game pieces, and a globe having a playing surface marked with sixty-four playing positions divided into eight ranks, and eight files which for identification may be considered lettered A to H, with file A disposed adjacent file H in such fashion that there are no side borders, the files being in the direction of meridians, the ranks being in the direction of latitudes, whereby one player plays from the region of the North Pole toward the South Pole, and the other player plays from the region of the South Pole toward the North Pole, and the globe and game pieces having cooperative means to hold a playing piece in position on the globe.

3. A game apparatus comprising a set of game pieces, and a globe having a playing surface marked with sixty-four playing positions divided into eight ranks, and eight files which for identification may be considered lettered A to H, with file A disposed adjacent file H in such fashion that there are no side borders, the files being in the direction of meridians, the ranks being in the direction of latitudes, whereby one player plays from the region of the North Pole toward the South Pole and the other player plays from the region of the South Pole toward the North Pole, the globe and game pieces having cooperative means to hold a playing piece in position on the globe, and additional means mounting the globe for rotation.

4. A game apparatus comprising a set of game pieces, and a cylinder having a playing surface marked with sixty-four playing positions divided into eight ranks, and eight files which for identification may be considered lettered A to H, with file A disposed adjacent file H in such fashion that there are no side borders, the files being parallel to the axis of the cylinder and the ranks being circumferential, whereby the players play from opposite ends of the cylinder.

5. A game apparatus comprising a set of game pieces, and a cylinder having a playing surface marked with sixty-four playing positions divided into eight ranks, and eight files which for identification may be considered lettered A to H, with file A disposed adjacent file H in such fashion that there are no side borders, the files being parallel to the axis of the cylinder, the ranks being circumferential, whereby the players play from opposite ends of the cylinder, and the cylinder and game pieces having cooperative means to hold a playing piece in position on the cylinder.

6. A game apparatus comprising a set of game pieces, and a cylinder having a playing surface marked with sixty-four playing positions divided into eight ranks, and eight files which for identification may be considered lettered A to H, with file A disposed adjacent file H in such fashion that there are no side borders, the files being parallel to the axis of the cylinder the ranks being circumferential, whereby the players play from opposite ends of the cylinder, the cylinder and game pieces having cooperative means to hold a playing piece in position on the cylinder, and additional means mounting the cylinder for rotation on its axis.

References Cited

UNITED STATES PATENTS

1,295,993	3/1919	Kleissl	273—131
1,553,611	9/1925	Harrison	273—134

FOREIGN PATENTS

218,607	2/1910	Germany.

DELBERT B. LOWE, *Primary Examiner.*