(12) INTERNATIONAL APPLICATION PUBLISHED UNDER THE PATENT COOPERATION TREATY (PCT)

(19) World Intellectual Property Organization
International Bureau

(43) International Publication Date
23 March 2017 (23.03.2017)

WIPO | PCT

(10) International Publication Number
WO 2017/046065 A1

(51) International Patent Classification:
H05K 5/06 (2006.01)

(21) International Application Number:
PCT/EP2016/071522

(22) International Filing Date:
13 September 2016 (13.09.2016)

(25) Filing Language: English

(26) Publication Language: English

(30) Priority Data:
62/218,294 14 September 2015 (14.09.2015) US

(71) Applicant: **COMMSCOPE CONNECTIVITY BELGIUM BVBA** [BE/BE]; Diestsesteenweg 692, 3010 Kessel-Lo (BE).

(72) Inventors: **COENEGRACHT, Philippe**; Burchtstraat 17, 3512 Hasselt (BE). **DE BIE, Alexandre Caroline M.**; Rue des anges 19, 1320 Beauvechain (BE). **FREDERICKX, Maddy Nadine**; Liersesteenweg 10A, 3200 Aarschot (BE). **CLAES, Paul Joseph**; Nobelstraat 201, 3128 Tremelo (BE). **VAN GENECHTEN, Geert**; Dijkbaan 21, 2290 Vorselaar (BE). **AZNAG, Mohamed**; Vossekotstraat 47, 3271 Scherpenheuvel (BE). **HOUBEN, Diederik**; Kapelstraat 38, 3540 Berbroek (BE).

(74) Agent: **KEANE, David**; Murgitroyd & Company, Scotland House, 165-169 Scotland Street, Glasgow, Strathclyde G5 8PL (GB).

(81) Designated States *(unless otherwise indicated, for every kind of national protection available)*: AE, AG, AL, AM, AO, AT, AU, AZ, BA, BB, BG, BH, BN, BR, BW, BY, BZ, CA, CH, CL, CN, CO, CR, CU, CZ, DE, DK, DM, DO, DZ, EC, EE, EG, ES, FI, GB, GD, GE, GH, GM, GT, HN, HR, HU, ID, IL, IN, IR, IS, JP, KE, KG, KN, KP, KR, KW, KZ, LA, LC, LK, LR, LS, LU, LY, MA, MD, ME, MG, MK, MN, MW, MX, MY, MZ, NA, NG, NI, NO, NZ, OM, PA, PE, PG, PH, PL, PT, QA, RO, RS, RU, RW, SA, SC, SD, SE, SG, SK, SL, SM, ST, SV, SY, TH, TJ, TM, TN, TR, TT, TZ, UA, UG, US, UZ, VC, VN, ZA, ZM, ZW.

(84) Designated States *(unless otherwise indicated, for every kind of regional protection available)*: ARIPO (BW, GH, GM, KE, LR, LS, MW, MZ, NA, RW, SD, SL, ST, SZ, TZ, UG, ZM, ZW), Eurasian (AM, AZ, BY, KG, KZ, RU, TJ, TM), European (AL, AT, BE, BG, CH, CY, CZ, DE, DK, EE, ES, FI, FR, GB, GR, HR, HU, IE, IS, IT, LT, LU, LV, MC, MK, MT, NL, NO, PL, PT, RO, RS, SE, SI, SK, SM, TR), OAPI (BF, BJ, CF, CG, CI, CM, GA, GN, GQ, GW, KM, ML, MR, NE, SN, TD, TG).

Published:

— *with international search report (Art. 21(3))*

(54) **Title**: LONGITUDINAL RADIAL SEAL

FIG. 1

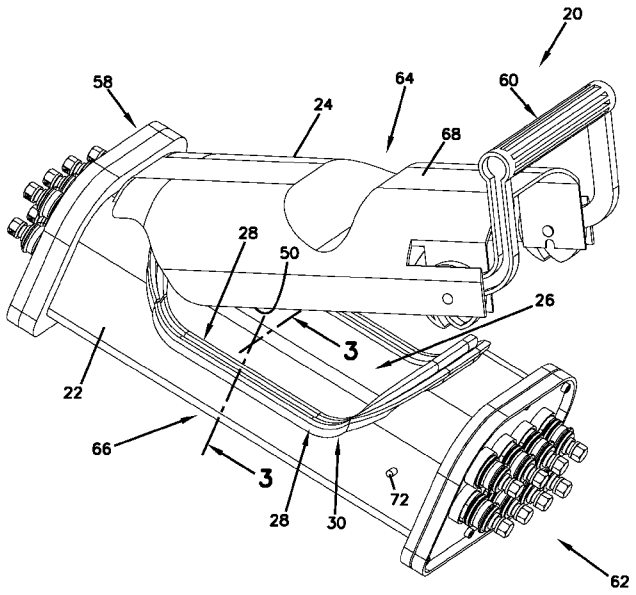

(57) **Abstract**: Aspects and techniques of the present disclosure relate to an enclosure (20) that can include first and second housing pieces (22, 24) that cooperate to define an enclosed interior (26) of the enclosure (20). The first and second housing pieces (22, 24) mate at an interface (28) that extends about a continuous sealing loop (30). The enclosure (20) may include a seal (44) that extends about the continuous sealing loop (30) of the enclosure (20) at the interface (28) between the first and second housing pieces (22, 24). The seal (44) can include a retention portion (46) positioned within a channel (36) of the first housing piece (22) and a sealing flap (48) connected to the retention portion (46). The second housing piece (24) may include an outer flange (50) that extends about the continuous sealing loop (30) of the enclosure (20). The sealing flap (48) of the seal (44) can be compressed between the outer flange (50) and a rim element (32) of the enclosure (20).

WO 2017/046065 A1

LONGITUDINAL RADIAL SEAL

CROSS-REFERENCE TO RELATED APPLICATION

This application claims the benefit of U.S. Patent Application Serial No. 62/218,294, filed on September 14, 2015, the disclosure of which is incorporated herein by reference in its entirety.

TECHNICAL FIELD

The present disclosure relates generally to a sealing arrangement and method, which may be used for forming a seal between two surfaces. More particularly, the present disclosure relates to a longitudinal sealing arrangement that seals in a radial direction.

BACKGROUND

Telecommunications networks often use enclosures for containing and protecting telecommunications equipment (e.g., splice locations, optical splitters, multiplexers, connection panels, etc.). Enclosures used in outside environments are desirably sealed to prevent moisture intrusion. Gel seals have worked extremely well for providing perimeter seals between bases and covers of enclosures and for providing seals at any other types of interfaces between housing pieces of an enclosure. An example gel sealed enclosure is disclosed at U.S. Patent No. 7,603,018, International Publication Nos. WO-99/41531, WO-2014/128137 A2. While gel seals are effective for preventing moisture intrusion, such gel seals typically become less effective after the seals have been disrupted or broken a number of times. Therefore, gel seals are often not used to seal components that are intended to be closed and reopened many times. Instead, elastomeric seals such as O-ring seals are often used. A problem with O-ring seals is that such seals often require relatively large clamping forces to ensure adequate sealing.

Most such seals are "axial seals" configured to be compressed in the same orientation as the direction of movement of the housing pieces being sealed. Thus, performance is dependent upon the exact relative position of the housing pieces in the

direction of movement of the housing pieces. Typically, multiple latches are positioned around a perimeter of the enclosure to provide the necessary force required to close the cover and bottom pieces together.

EP 1053419 B1 discloses a sealing interface having a shaped elastomeric sealing member that is used to provide a seal between two housing pieces. In use, the elastomeric sealing member forms a "radial seal" within a channel of one of the housing pieces. Radial seals are seals that are compressed in an orientation perpendicular to the direction of movement of the housing pieces being sealed. Other configurations are desirable in the area of radial seals.

SUMMARY

The present disclosure generally relates to a sealing arrangement for use with enclosures including a cover and bottom. The sealing arrangement can be configured to seal the cover and bottom together in a radial direction with minimal force and few latches to close the enclosure.

One aspect of the present disclosure relates to an enclosure including first and second housing pieces that cooperate to define an enclosed interior of the enclosure. The first and second housing pieces mate at an interface that extends about a continuous sealing loop. The first housing piece may define a channel that extends around the continuous sealing loop of the enclosure. The enclosure may include a seal that extends about the continuous sealing loop of the enclosure at the interface between the first and second housing pieces. The seal can include a retention portion positioned within the channel of the first housing piece and a sealing flap connected to the retention portion. The second housing piece may include an outer flange that extends about the continuous sealing loop of the enclosure. The sealing flap of the seal can be compressed between the outer flange and a rim element of the enclosure.

A variety of additional aspects will be set forth in the description that follows. The aspects relate to individual features and to combinations of features. It is to be understood that both the foregoing general description and the following detailed description are exemplary and explanatory only and are not restrictive of the broad inventive concepts upon which the embodiments disclosed herein are based.

BRIEF DESCRIPTION OF THE DRAWINGS

FIG. 1 is a perspective view of an example telecommunications enclosure including a sealing interface in accord with the principles of the present disclosure.

FIG. 2 is an exploded perspective view of the telecommunications enclosure shown in FIG. 1.

FIG. 3 is a cross-sectional view taken generally along line 2-2, FIG. 1; showing the sealing interface recessed in a first housing piece in a non-sealing state.

FIG. 4 is a cross-sectional view of the telecommunications enclosure shown in FIG. 1 showing a second housing piece positioned above the sealing interface in a non-sealing state in accord with the principles of the present disclosure.

FIG. 5 is a cross-sectional view of the first and second housing pieces mated together at the sealing interface with a seal therebetween in a sealing state in accord with the principles of the present disclosure.

FIG. 6 is a top plan view of the telecommunications enclosure shown in FIG. 1 showing a lateral boundary in accord with principles of the present disclosure.

DETAILED DESCRIPTION

FIG. 1 illustrates a perspective view of an example telecommunications enclosure 20 in accordance with the principles of the present disclosure. The example telecommunications enclosure 20 includes a first housing piece 22 and a second housing piece 24 that together cooperate to define an enclosed interior 26 of the enclosure 20. The first and second housing pieces 22, 24 can mate at a sealing interface 28 that extends about a continuous sealing loop 30. The depicted continuous sealing loop 30 forms a continuous linked seal path which provides for an uninterrupted seal between the first and second housing pieces 22, 24.

The first housing piece 22 is depicted as a base and the second housing piece 24 is depicted as a cover. It will be appreciated that the housing pieces can include housing bodies with a dome or other type of arrangement. Aspects of the present disclosure are applicable to any type of enclosure having housing pieces that fit together and require sealing.

Referring to FIG. 2, an exploded perspective view of the

telecommunications enclosure 20 is depicted. The first housing piece 22 includes a rim element 32 that extends about the continuous sealing loop 30 of the enclosure 20. The rim element 32 can be configured with a free end 34. The first housing piece 22 defines a channel 36 that extends around the continuous sealing loop 30 of the telecommunications enclosure 20. The channel 36 may be integral with a main body of the first housing piece 22.

In one example, the channel 36 can be positioned laterally inside the rim element 32 and be defined in part by an inwardly facing side 38 of the rim element 32. The channel 36 can have an open end 40 adjacent the free end 34 of the rim element 32. The rim element 32 can also include an outwardly facing side 42. As used herein, inwardly is defined as facing toward the enclosed interior 26 of the telecommunications enclosure 20 and outwardly is defined as facing away from the enclosed interior 26 of the telecommunications enclosure 20.

The example telecommunications enclosure 20 further includes a seal 44 that extends about the continuous sealing loop 30 of the telecommunications enclosure 20 at the sealing interface 28 to form a seal between the first and second housing pieces 22, 24. In certain examples, the seal 44 can be made of a gel or gel impregnated foam. In one example, the seal 44 has an elastic construction and can be made of a rubber or rubber-like material, such as a silicone rubber material. It will be appreciated that other materials having comparable elastomeric characteristics can be used as well.

Referring to FIGS. 3-5, a cross-sectional view taken along lines 2-2 of FIG. 1 is shown. The seal 44 includes a retention portion 46 positioned within the channel 36 of the first housing piece 22. The seal 44 can also be configured with a sealing flap 48 connected to the retention portion 46. In one example, the sealing flap 48 can be integral with (e.g., formed in one seamless piece with) the retention portion 46. The sealing flap 48 can be configured to wrap over the free end 34 of the rim element 32 and along the outwardly facing side 42 of the rim element 32.

The second housing piece 24 may include an outer flange 50 that extends about the continuous sealing loop 30 of the telecommunications enclosure 20. The outer flange 50 includes an inwardly facing sealing surface 52 that opposes the outwardly facing side 42 of the rim element 32 when the first and second housing pieces 22, 24 are

mated at the sealing interface 28. The sealing flap 48 of the seal 44 can be compressed in a radial direction D between the inwardly facing sealing surface 52 of the outer flange 50 and the outwardly facing side 42 of the rim element 32. As used herein, a radial direction is defined as the direction between the inwardly facing sealing surface 52 of the outer flange 50 and the outwardly facing side of the rim element 32. When the first and second housing pieces 22, 24 are fitted together, the sealing flap 48 is compressed in the radial direction D.

In one example, the first and second housing pieces 22, 24 can have relative movement in a first orientation X when moving between open and closed configurations. In that way, the sealing flap 48 can be compressed in a second orientation Y (i.e., a radial orientation) that is generally perpendicular relative to the first orientation X when compressed between the inwardly facing sealing surface 52 of the outer flange 50 and the outwardly facing side 42 of the rim element 32.

Turning again to FIG. 1, the first and second housing pieces 22, 24 can be pivotally connected together at a hinge 54 (FIG. 2) defining a pivot axis 56 (FIG. 2). As depicted, the first and second housing pieces 22, 24 are pivotally connected together at a first end 58 of the telecommunications enclosure 20 by the hinge 54. The hinge 54 allows the telecommunications enclosure 20 to be opened and closed about the pivot axis 56. A latch 60 (e.g., handle) can be provided at an opposite second end 62 of the telecommunications enclosure 20 for moving the first and second housing pieces 22, 24 to a fully closed and mated positon where the seal 44 is fully compressed completely about the continuous sealing loop 30.

The example telecommunications enclosure 20 has a front side 64 and a back side 66 such that the latch 60 can be accessible from the front side 64 of the telecommunications enclosure 20. The second housing piece 24 defines the front side 64 of the telecommunications enclosure 20 including a major front face 68. The first housing piece 22 defines the back side 66 of the telecommunications enclosure 20 including a major back face 70. The latch 60 can be carried with the second housing piece 24 and can be accessible at the major front face 68.

In certain examples, the first housing piece 22 of the telecommunications

enclosure 20 can include latch pins 72 that project laterally outwards on opposing sides thereof near the second end 62. The second housing piece 24 can include retention pins 74 that pivotally connect the latch 60 to opposing sidewalls 76 of the second housing piece 24.

The second housing piece 24 can be pivoted down into a staged position with some compression onto the first housing piece 22 such that the latch pins 72 engage cam slots 78 of cams 80 positioned on the opposing sidewalls 76 of the second housing piece 24. The cams 80 can be actuated by moving or rotating the latch 60 relative to the second housing piece 24 to allow the latch pins 72 to ride along the cam slots 78. The cams 80 thereby pull the second housing piece 24 from the staged position to a final position such that the second housing piece 24 is fully compressed against the first housing piece 22. Thus, the latch 60 can provide a final range of pivotal motion to cam the first and second housing pieces 22, 24 together in a sealing state.

The latch 60 and hinge 54 securement arrangement allows for the telecommunications enclosure 20 to be effectively sealed without requiring large clamping forces. In other words, the latch 60 can be actuated with a relatively low latching force to retain the telecommunications enclosure 20 in the fully closed and mated position. By utilizing low forces, the securement arrangement depicted to secure the first and second housing pieces 22, 24 together can be made less robust (e.g., fewer latches can be used). Although one latch is shown, it is understood that in other examples more than one latch may be used.

It will be appreciated that the housing has an elongate configuration with a length that extends along a major axis of the housing and width that extends along a minor axis of the housing. The housing length is longer than the housing width. The housing length extends along a length of the opening surrounded by the perimeter seal and the housing width extends along a width of the opening surrounded by the perimeter seal. The hinge of the cover is located at one end of the housing length and the cam latch or other type of latch is located at the opposite end of the housing length. When closing the cover, the length of the cover is elongated to provide leverage for facilitating closing the cover and pressurizing the perimeter seal. Additionally, as the cover pivots closed, the perimeter seal is gradually pressurized along the length of the housing opening since

the cover gradually makes contact with an increased length of the perimeter seal as the cover is pivoted closed. Thus it is not necessary to simultaneously compress the seal along the entire length of the seal perimeter at once. The perimeter seal is fully compressed about its entire perimeter when the cover is pivoted through the last bit of movement before the cover reaches a fully closed position. The cam latch is configured to provide the additional force needed to fully compress the seal and to move the cover through the final range of pivotal movement before the cover reaches the fully closed positon. In one example, a single fastening structure (e.g., latches, clamps, cams, etc.) or multiple fastening structures are only provided at the end of the housing opposite from the hinge. However, in other examples, fastening structures can also be provided at the sides of the housing.

Referring to FIG. 6, a top plan view of the telecommunications enclosure 20 is shown. As depicted, the latch 60 can be fully contained within a lateral boundary L defined by the telecommunications enclosure 20. In the depicted example, the latch 60 does not project beyond the lateral boundary L defined by the telecommunications enclosure 20. The first and second housing pieces 22, 24 can cooperate to define lateral sides 82 of the telecommunications enclosure 20 which may correspond with the lateral boundary L of the telecommunications enclosure 20.

The latch 60 can be accessed from a top of the telecommunications enclosure 20 such that the latch 60 does not protrude outwardly from a side of the telecommunications enclosure 20. Such an arrangement allows the depicted telecommunications enclosure 20 to be mounted in a compact configuration or next to another enclosure without preventing access to the latch 60.

From the forgoing detailed description, it will be evident that modifications and variations can be made without departing from the spirit and scope of the disclosure.

Parts List:

D – Radial direction

X – First orientation

Y – Second orientation

L – Lateral boundary

20 – Enclosure

22 – First housing piece

24 – Second housing piece

26 – Enclosed interior

28 – Sealing interface

30 – Continuous sealing loop

32 – Rim element

34 – Free end

36 – Channel

38 – Inwardly facing side

40 – Open end

42 – Outwardly facing side

44 – Seal

46 – Retention portion

48 – Sealing flap

50 – Outer flange

52 – Inwardly facing sealing surface

54 – Hinge

56 – Pivot axis

58 – First end

60 – Latch

62 – Second end

64 – Front side

66 – Back side

68 – Major front face

70 – Major back face

72 – Latch pins

74 – Retention pins

76 – Opposing sidewalls

78 – Cam slots

80 – Cams

82 – Lateral sides

WHAT IS CLAIMED IS:

1. An enclosure (20) comprising:

first and second housing pieces (22, 24) that cooperate to define an enclosed interior (26) of the enclosure (20), the first and second housing pieces (22, 24) mating at an interface (28) that extends about a continuous sealing loop (30), the first housing piece (22) including a rim element (32) that extends about the continuous sealing loop (30) of the enclosure (20), the rim element (32) having a free end (34), the first housing piece (22) defining a channel (36) that extends around the continuous sealing loop (30) of the enclosure (20), the channel (36) being positioned laterally inside the rim element (32) and being defined in part by an inwardly facing side (38) of the rim element (32), the channel (36) having an open end (40) adjacent the free end (34) of the rim element (32), the rim element (32) also including an outwardly facing side (42);

a seal (44) that extends about the continuous sealing loop (30) of the enclosure (20) at the interface (28) between the first and second housing pieces (22, 24), the seal (44) including a retention portion (46) positioned within the channel (36) of the first housing piece (22), the seal (44) also including a sealing flap (48) connected to the retention portion (46), the sealing flap (48) wrapping over the free end (34) of the rim element (32) and along the outwardly facing side (42) of the rim element (32); and

the second housing piece (24) including an outer flange (50) that extends about the continuous sealing loop (30) of the enclosure (20), the outer flange (50) including an inwardly facing sealing surface (52) that opposes the outwardly facing side (42) of the rim element (32) when the first and second housing pieces (22, 24) are mated at the interface (28), the sealing flap (48) of the seal (44) being compressed between the inwardly facing sealing surface (52) of the outer flange (50) and the outwardly facing side (42) of the rim element (32).

2. The enclosure of claim 1, wherein the first and second housing pieces (22, 24) have relative movement in a first orientation (X) when moving between open and closed configurations, and wherein the sealing flap (48) is compressed in a second orientation (Y) that is generally perpendicular relative to the first orientation (X) when compressed

between the inwardly facing sealing surface (52) of the outer flange (50) and the outwardly facing side (42) of the rim element (32).

3. The enclosure of claim 1, wherein the first and second housing pieces (22, 24) are pivotally connected together at hinge (54) defining a pivot axis (56).

4. The enclosure of claim 1, wherein the first and second housing pieces (22, 24) are pivotally connected together at a first end (58) of the enclosure (20) by a hinge (54), and wherein a latch (60) is provided at an opposite second end (62) of the enclosure (20) for moving the first and second housing pieces (22, 24) to a fully closed and mated position where the seal (44) is fully compressed completely about the continuous sealing loop (30).

5. The enclosure of claim 4, wherein the latch (60) retains the enclosure (20) in the fully closed and mated position.

6. The enclosure of claim 5, wherein the enclosure (20) includes only a single one of the latch (60).

7. The enclosure of claim 6, wherein the latch (60) is fully contained within a lateral boundary (L) defined by the enclosure (20) and does not project beyond the lateral boundary (L) defined by the enclosure (20).

8. The enclosure of claim 7, wherein the enclosure (20) has a front side (64) and a back side (66), and wherein the latch (60) is accessible from the front side (64) of the enclosure (20).

9. The enclosure of claim 8, wherein the first and second housing pieces (22, 24) cooperate to define lateral sides (82) of the enclosure (20) which correspond with the lateral boundary (L) of the enclosure (20), wherein the second housing piece (24) defines the front side (64) of the enclosure (20) including a major front face (68), wherein the

first housing piece (22) defines the back side (66) of the enclosure (20) including a major back face (70), and wherein the latch (60) is carried with the second housing piece (24) and is accessible at the major front face (68).

10. The enclosure of claim 4, wherein the enclosure (20) further includes latch pins (72) that project laterally outwards from opposing sides of the first housing piece (22) near the second end (62).

11. The enclosure of claim 10, wherein the second housing piece (24) includes retention pins (74) that pivotally connect the latch (60) to opposing sidewalls (76) of the second housing piece (24).

12. The enclosure of claim 11, wherein the latch (60) has a first position such that the latch pins (72) can be received in cam slots (78) of cams (80) positioned on the opposing sidewalls (76) of the second housing piece (24) as the second housing piece (24) is pivoted closed onto the first housing piece (22).

13. The enclosure of claim 12, wherein the latch (60) is pivoted from the first position to a second position such that the latch pins (72) ride along the cam slots (78) to pull the second housing piece (24) tightly against the first housing piece (22) in a final pivotal motion.

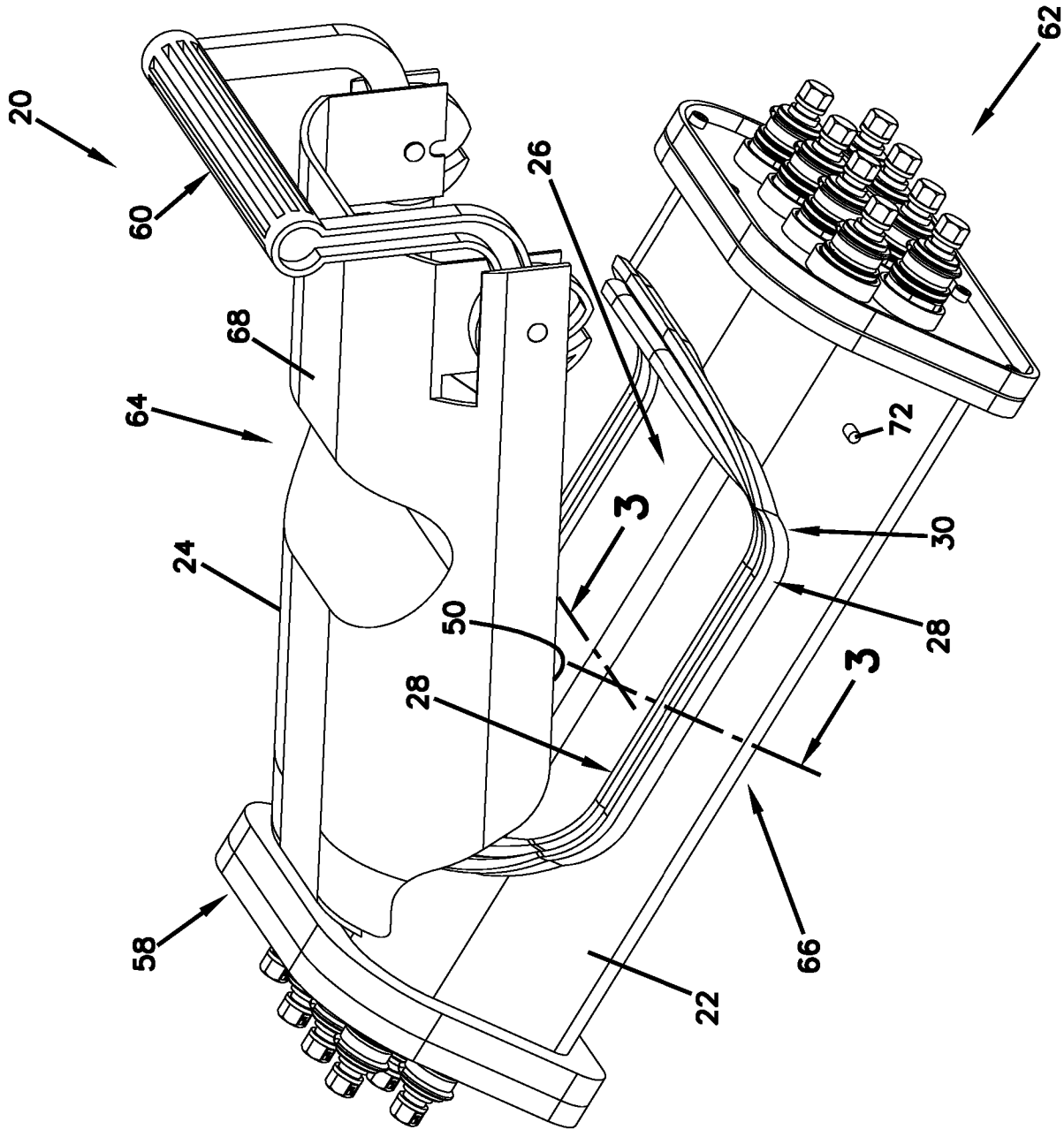

FIG. 1

FIG. 2

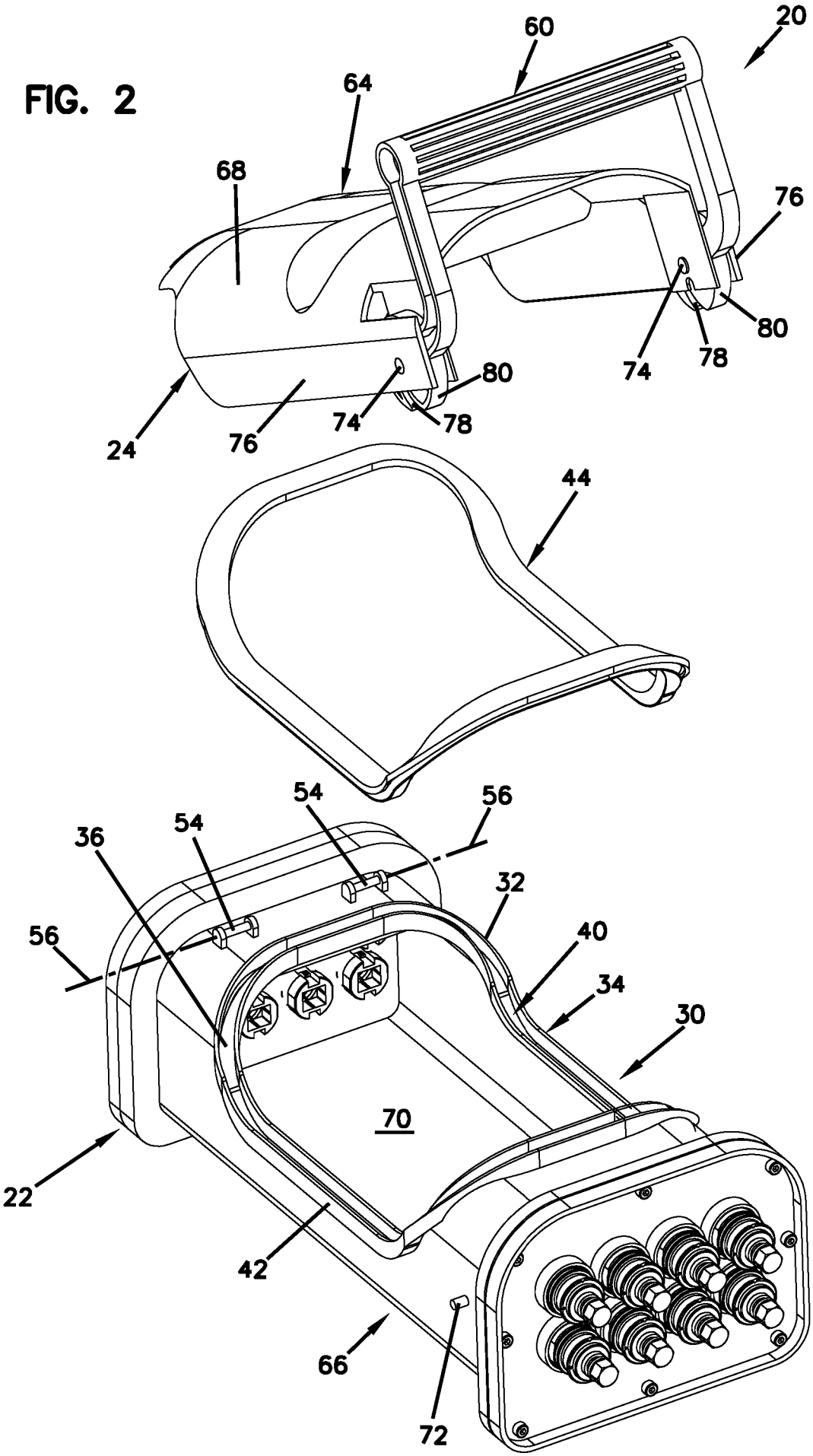

FIG. 5

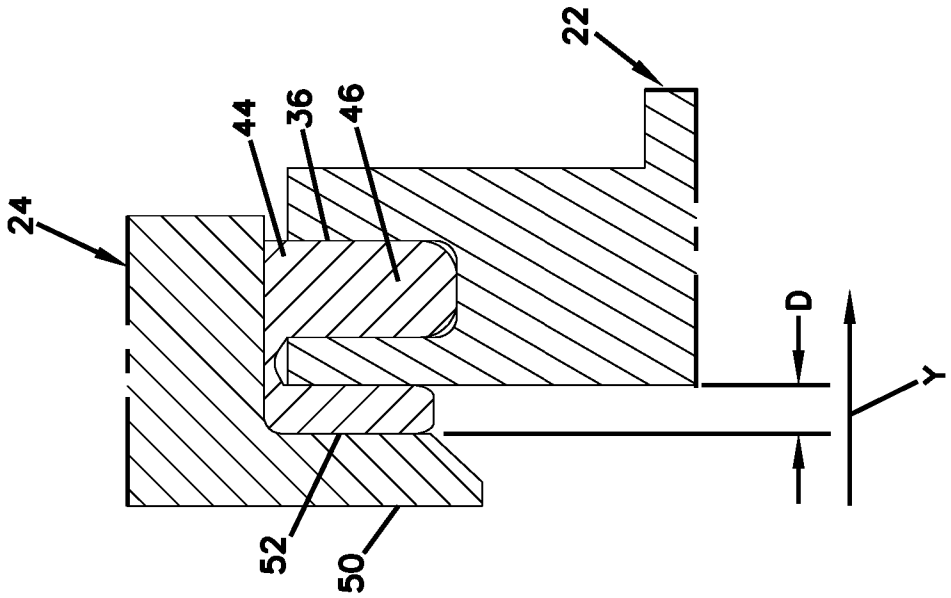

FIG. 4

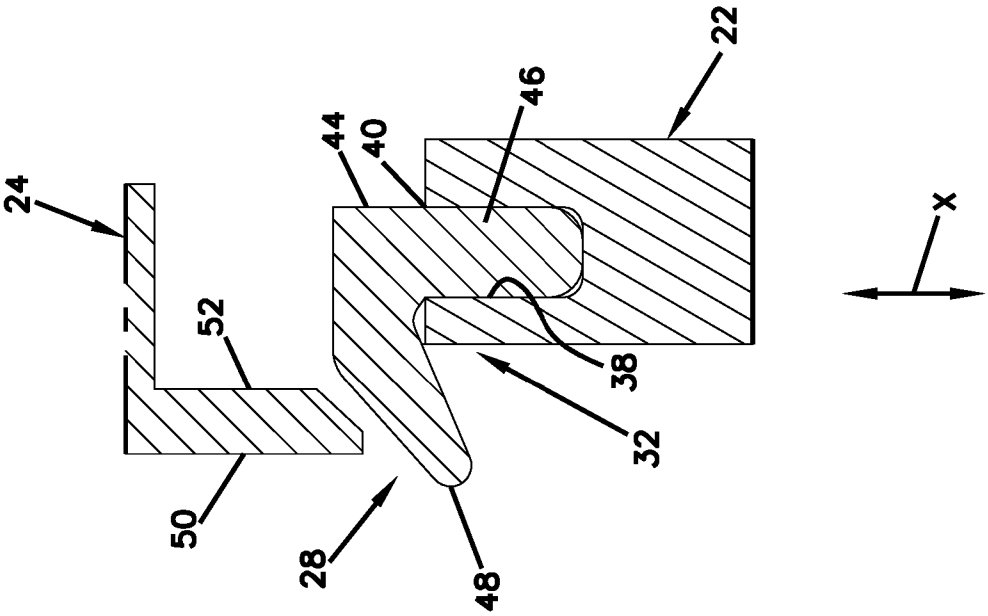

FIG. 3

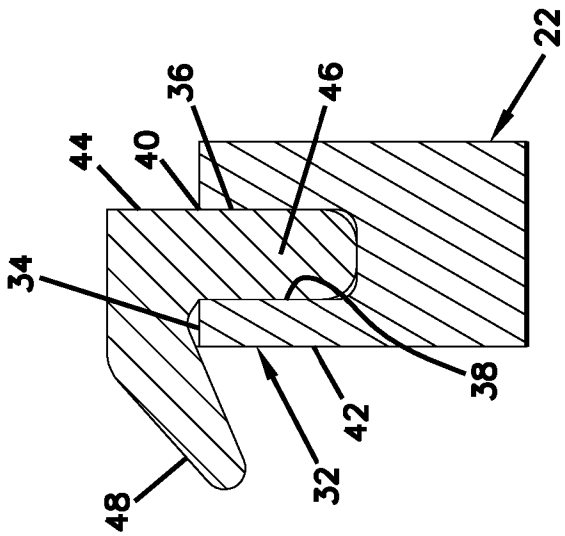

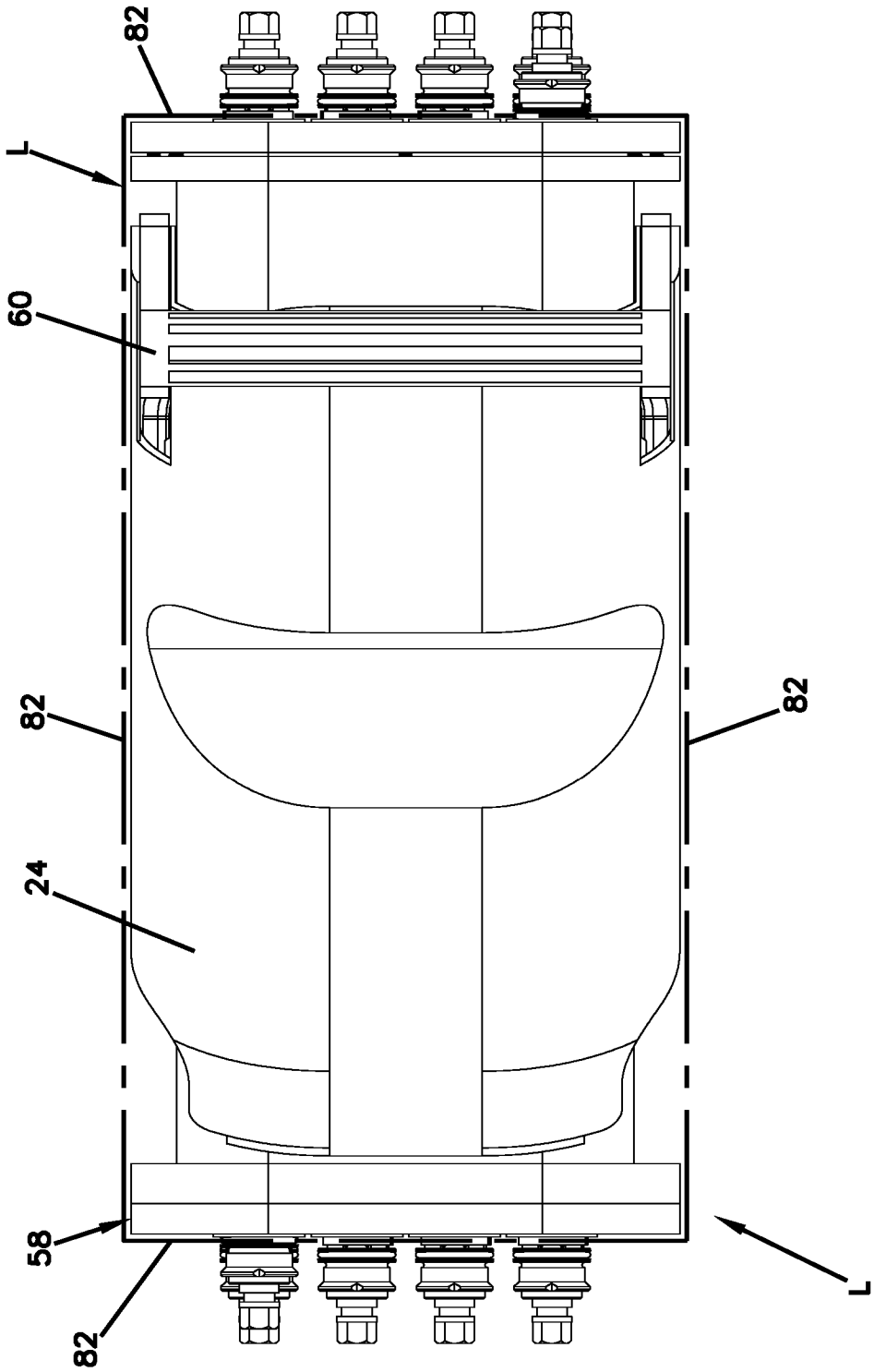

FIG. 6

INTERNATIONAL SEARCH REPORT

International application No
PCT/EP2016/071522

A. CLASSIFICATION OF SUBJECT MATTER
INV. H05K5/06
ADD.

According to International Patent Classification (IPC) or to both national classification and IPC

B. FIELDS SEARCHED

Minimum documentation searched (classification system followed by classification symbols)
H05K H01R

Documentation searched other than minimum documentation to the extent that such documents are included in the fields searched

Electronic data base consulted during the international search (name of data base and, where practicable, search terms used)

EPO-Internal, WPI Data

C. DOCUMENTS CONSIDERED TO BE RELEVANT

Category*	Citation of document, with indication, where appropriate, of the relevant passages	Relevant to claim No.
A	US 6 561 522 B1 (RADELET CHRISTIAAN [BE] ET AL) 13 May 2003 (2003-05-13) figure 1b abstract	1-13
A	US 5 277 610 A (KREHBIEL FRED L [US] ET AL) 11 January 1994 (1994-01-11) abstract figure 3	1-13

☐ Further documents are listed in the continuation of Box C.

☒ See patent family annex.

* Special categories of cited documents :

"A" document defining the general state of the art which is not considered to be of particular relevance

"E" earlier application or patent but published on or after the international filing date

"L" document which may throw doubts on priority claim(s) or which is cited to establish the publication date of another citation or other special reason (as specified)

"O" document referring to an oral disclosure, use, exhibition or other means

"P" document published prior to the international filing date but later than the priority date claimed

"T" later document published after the international filing date or priority date and not in conflict with the application but cited to understand the principle or theory underlying the invention

"X" document of particular relevance; the claimed invention cannot be considered novel or cannot be considered to involve an inventive step when the document is taken alone

"Y" document of particular relevance; the claimed invention cannot be considered to involve an inventive step when the document is combined with one or more other such documents, such combination being obvious to a person skilled in the art

"&" document member of the same patent family

Date of the actual completion of the international search	Date of mailing of the international search report
25 October 2016	04/11/2016

Name and mailing address of the ISA/	Authorized officer
European Patent Office, P.B. 5818 Patentlaan 2 NL - 2280 HV Rijswijk Tel. (+31-70) 340-2040, Fax: (+31-70) 340-3016	Bernardini, Andrea

INTERNATIONAL SEARCH REPORT

Information on patent family members

International application No
PCT/EP2016/071522

Patent document cited in search report	Publication date	Patent family member(s)	Publication date
US 6561522 B1	13-05-2003	AT 237760 T	15-05-2003
		DE 69906939 D1	22-05-2003
		DE 69906939 T2	24-12-2003
		EP 1053419 A1	22-11-2000
		ES 2193684 T3	01-11-2003
		US 6561522 B1	13-05-2003
		WO 9941531 A1	19-08-1999
US 5277610 A	11-01-1994	DE 69326675 D1	11-11-1999
		DE 69326675 T2	25-05-2000
		EP 0603740 A2	29-06-1994
		JP H0831344 B2	27-03-1996
		JP H06260240 A	16-09-1994
		SG 43828 A1	14-11-1997
		US 5277610 A	11-01-1994