(12) INTERNATIONAL APPLICATION PUBLISHED UNDER THE PATENT COOPERATION TREATY (PCT)

(19) World Intellectual Property Organization
International Bureau

(43) International Publication Date
5 June 2008 (05.06.2008)

PCT

(10) International Publication Number
WO 2008/066472 A1

(51) International Patent Classification:
F02M 25/07 (2006.01)

(21) International Application Number:
PCT/SE2007/050836

(22) International Filing Date:
12 November 2007 (12.11.2007)

(25) Filing Language: Swedish

(26) Publication Language: English

(30) Priority Data:
0602517-5 27 November 2006 (27.11.2006) SE

(71) Applicant *(for all designated States except US)*: **SCANIA CV AB** [SE/SE]; Patents, S-15187 Södertälje (SE).

(72) Inventors; and

(75) Inventors/Applicants *(for US only)*: **KARDOS, Zoltan** [SE/SE]; Karlslundsgatan 19, S-15135 Södertälje (SE). **PETTERSSON, Rickard** [SE/SE]; Söderby 633, S-14451 Rönninge (SE). **ALSTERDAL, Tomas** [SE/SE]; Erikshällsgatan 44, S-15146 Södertälje (SE). **NYRÉN, Henrik** [SE/SE]; Släthagsvägen 24, S-15139 Södertälje (SE).

(74) Agent: **FORSELL, Hans**; SCANIA CV AB, Patents UTY, S-15187 Södertälje (SE).

(81) Designated States *(unless otherwise indicated, for every kind of national protection available)*: AE, AG, AL, AM, AT, AU, AZ, BA, BB, BG, BH, BR, BW, BY, BZ, CA, CH, CN, CO, CR, CU, CZ, DE, DK, DM, DO, DZ, EC, EE, EG, ES, FI, GB, GD, GE, GH, GM, GT, HN, HR, HU, ID, IL, IN, IS, JP, KE, KG, KM, KN, KP, KR, KZ, LA, LC, LK, LR, LS, LT, LU, LY, MA, MD, ME, MG, MK, MN, MW, MX, MY, MZ, NA, NG, NI, NO, NZ, OM, PG, PH, PL, PT, RO, RS, RU, SC, SD, SE, SG, SK, SL, SM, SV, SY, TJ, TM, TN, TR, TT, TZ, UA, UG, US, UZ, VC, VN, ZA, ZM, ZW.

(84) Designated States *(unless otherwise indicated, for every kind of regional protection available)*: ARIPO (BW, GH, GM, KE, LS, MW, MZ, NA, SD, SL, SZ, TZ, UG, ZM, ZW), Eurasian (AM, AZ, BY, KG, KZ, MD, RU, TJ, TM), European (AT, BE, BG, CH, CY, CZ, DE, DK, EE, ES, FI, FR, GB, GR, HU, IE, IS, IT, LT, LU, LV, MC, MT, NL, PL, PT, RO, SE, SI, SK, TR), OAPI (BF, BJ, CF, CG, CI, CM, GA, GN, GQ, GW, ML, MR, NE, SN, TD, TG).

Published:
— *with international search report*

(54) **Title:** ARRANGEMENT FOR RECIRCULATION OF EXHAUST GASES IN A SUPERCHARGED COMBUSTION ENGINE

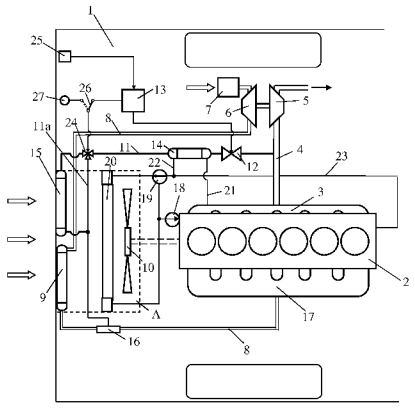

(57) **Abstract:** The present invention relates to an arrangement for recirculation of exhaust gases of a supercharged combustion engine. The arrangement comprises a return line (11) for recirculating exhaust gases, an air-cooled EGR cooler (15) and a bypass line (11a) which has an extent such that it can lead recirculating exhaust gases past the EGR cooler (15). The arrangement also comprises a valve means (24) adapted to being placed in a first position to lead the whole flow of recirculating exhaust gases through the EGR cooler (15) during situations where there is no risk of ice formation in the EGR cooler (15), and in a second position to lead the whole flow of recirculating exhaust gases through the bypass line (11a) during situations where there is risk of ice formation in the EGR cooler (15).

WO 2008/066472 A1

Arrangement for recirculation of exhaust gases of a supercharged combustion engine

BACKGROUND TO THE INVENTION, AND STATE OF THE ART

The present invention relates to an arrangement for recirculation of exhaust gases of a supercharged combustion engine according to the preamble of claim 1.

The amount of air which can be supplied to a supercharged combustion engine depends on the pressure of the air but also on the temperature of the air. Supplying a largest possible amount of air to the combustion engine entails cooling the compressed air in a charge air cooler before it is led to the combustion engine. The compressed air is cooled, usually in a charge air cooler situated at a front portion of a vehicle, by surrounding air. The compressed air can thus be cooled to a temperature substantially corresponding to the temperature of the surroundings.

The technique known as EGR (Exhaust Gas Recirculation) is a known way of recirculating part of the exhaust gases from a combustion engine. The recirculating exhaust gases are mixed with the inlet air to the combustion engine before the mixture is led to the cylinders of the combustion engine. Adding exhaust gases to the air causes a lower combustion temperature resulting inter alia in a reduced content of nitrogen oxides NO_x in the exhaust gases. This technique is used for both Otto engines and diesel engines. The recirculating exhaust gases are cooled, usually in an EGR cooler, before they are mixed with the inlet air. Coolant-cooled EGR coolers are commonly used, but the use of air-cooled EGR coolers is also known. In an air-cooled EGR cooler the recirculating exhaust gases are cooled to a temperature substantially corresponding to the temperature of the compressed air. The recirculating exhaust gases therefore do not warm the cooled compressed air when they are mixed and led to the combustion engine.

Exhaust gases contain a relatively large amount of water vapour. When they are cooled to a temperature below its dewpoint, the water vapour will condense within the

EGR cooler. In situations where the temperature of the surrounding air is below 0°C, there is also risk of condensed water vapour freezing to ice within the EGR cooler. Such ice formation entails the possibility of the exhaust flow ducts through the EGR cooler becoming more or less obstructed, resulting in cessation of the recirculation of exhaust gases.

US 6 367 256 refers to a combustion engine with a system for recirculation of exhaust gases, in which the recirculating exhaust gases are cooled in a coolant-cooled EGR cooler. The coolant flow through the EGR cooler is constant and large so that local boiling of the coolant in the EGR cooler is prevented even in situations where large amounts of exhaust gases are recirculated. When a smaller amount of exhaust gases is recirculated or the coolant is at a low temperature, the ample coolant flow in the EGR cooler may cool the recirculating exhaust gases to such a low temperature that the water vapour in the exhaust gases condenses. To prevent the returned exhaust gases from reaching too low a temperature, the recirculating exhaust gases are led entirely or partly through a bypass line instead of being cooled in the EGR cooler. The system comprises condensate separation devices at various points along the exhaust flow path. An object of that invention seems to be to prevent or at least reduce condensate precipitation along the exhaust flow path.

SUMMARY OF THE INVENTION

The object of the present invention is to provide an arrangement for recirculation of exhaust gases of a supercharged combustion engine whereby the exhaust gases are prevented from being cooled to below a lowest acceptable temperature in an air-cooled EGR cooler even in circumstances where the cooling air is at a very low temperature.

This object is achieved with the arrangement of the kind mentioned in the introduction which is characterised by the features indicated in the characterising part of claim 1. According to the invention, the arrangement thus comprises a bypass line and a valve means by which it is possible to lead the exhaust gases past the EGR cooler if there is risk of their being cooled to below a lowest acceptable temperature in the EGR cooler.

In circumstances where there is risk of the recirculating exhaust gases being cooled to below the lowest acceptable temperature in the EGR cooler, the valve means is therefore placed in the second position that the whole exhaust flow is led past the EGR cooler. The recirculating exhaust gases are thus prevented from being cooled to below the lowest acceptable temperature. Exhaust gases contain water vapour. When they are cooled to a temperature below the dewpoint of the water vapour, water in liquid form will precipitate within the EGR cooler. If the exhaust gases are cooled to a temperature below 0°C, the precipitated water will freeze to ice within the EGR cooler. The aforesaid lowest acceptable temperature refers primarily to the gaseous medium not being cooled to a temperature below 0°C which would result in ice forming within the cooler. In practice, however, a safety margin of a couple of degrees may be applicable for ensuring that ice formation will not occur in any part of the EGR cooler. The possibility is nevertheless not excluded that said lowest acceptable temperature may refer to other temperatures and other phenomena than ice formation, e.g. it may be desirable to prevent too much condensation of water vapour within the EGR cooler.

According to an embodiment of the present invention, the arrangement comprises a manually settable control device by which it is possible to place the valve means in said first position or said second position. Such a control device enables a driver to take a decision and determine in which position the valve means should be placed and when it should be changed. The driver can make such a decision on the basis, for example, of knowing the temperature of the surrounding air and the prevailing weather conditions. With advantage, however, the arrangement comprises a control unit adapted to receiving information concerning at least one parameter for deciding whether there is risk of ice formation in the EGR cooler and to placing the valve means in the second position when it decides there is such a risk. Thus the control unit can automatically place the valve means in an appropriate position during operation of the combustion engine. The control unit may be a computer unit provided with software adapted to deciding in which position to place the valve means on the basis of information about one or more guiding parameters. Preferably, the arrangement comprises a temperature sensor adapted to detecting the temperature of the surrounding air and the control unit is adapted to using information from said

temperature sensor to decide whether there is risk of ice formation in the EGR cooler. By a simple control process, the control unit will place the valve means in the first position when the temperature sensor indicates a temperature above 0°C and in the second position when the temperature sensor indicates a temperature below 0°C. The control process may nevertheless be significantly more complex. With a more complex control process, it is possible to detect situations where it is appropriate to use the air-cooled EGR cooler even if the surrounding air is at a temperature below 0°C.

According to a preferred embodiment of the invention, the control unit may be adapted to using knowledge of a parameter which is related to the exhaust flow through the return line to decide whether there is risk of ice formation in the EGR cooler. When a larger exhaust flow is led through the EGR cooler, the exhaust gases cannot be cooled to as low a temperature as when a smaller exhaust flow is led through the it. In situations where an ambient temperature somewhat below 0°C prevails, the control unit can therefore place the valve means in the first position when large amounts of exhaust gases are returned via the return line and place the valve means in the second position when smaller amounts of exhaust gases are returned via the return line. The control unit may also be adapted to using knowledge of a parameter which is related to the flow velocity of the surrounding air through the EGR cooler to decide whether there is risk of ice formation in the EGR cooler. The flow velocity of the surrounding air is a parameter which determines how effectively the recirculating exhaust gases are cooled in the EGR cooler. If the cooling air flows at a high velocity through the EGR cooler, the result is more effective cooling of the recirculating exhaust gases than when the air is at a lower velocity.

According to a preferred embodiment of the invention, the arrangement comprises a coolant-cooled EGR cooler adapted to cooling the recirculating exhaust gases in a first stage before they are cooled in the air-cooled EGR cooler in a second stage. Assurance is thus afforded that the exhaust gases will undergo acceptable cooling in all circumstances. With advantage, the coolant of the cooling system for the combustion engine is used for cooling the recirculating exhaust gases in the first stage. The recirculating exhaust gases can thus be provided with effective cooling in the first

stage. The EGR cooler may comprise a first tank for receiving recirculating exhaust gases, a cooling portion through which the recirculating exhaust gases flow during cooling by surrounding air, and a second tank for receiving the recirculating exhaust gases after they have been cooled in the cooling portion. Such an EGR cooler may with advantage be fitted at a front portion of a vehicle where it has air at the temperature of the surroundings flowing through it. The valve means may be arranged in the first tank and said bypass line may extend between the first tank and the second tank, making it possible for the bypass to constitute an integral part of the EGR cooler and be fitted together with it as a composite unit.

BRIEF DESCRIPTION OF THE DRAWINGS

Preferred embodiments of the invention are described below by way of examples with reference to the attached drawings, in which:

Fig. 1 depicts an arrangement according to a first embodiment of the invention and

Fig. 2 depicts an arrangement according to a second embodiment of the invention.

DETAILED DESCRIPTION OF PREFERRED EMBODIMENTS OF THE INVENTION

Fig. 1 depicts a vehicle 1 powered by a supercharged combustion engine 2. The vehicle 1 may be a heavy vehicle powered by a supercharged diesel engine. The exhaust gases from the cylinders of the combustion engine 2 are led via an exhaust manifold 3 to an exhaust line 4. The exhaust gases in the exhaust line 4, which are at above atmospheric pressure, are led to a turbine 5 of a turbo unit. The turbine 5 is thus provided with driving power which is transferred, via a connection, to a compressor 6. The compressor 6 compresses air which is led into an inlet line 8 via an air filter 7. A charge air cooler 9 is arranged in the inlet line 8. The charge air cooler 9 is arranged in a region A at a front portion of the vehicle 1. The function of the charge air cooler 9 is to cool the compressed air before it is led to the combustion engine 2. The compressed air is cooled in the charge air cooler 9 by surrounding air which is caused to flow

through the charge air cooler 9 by a radiator fan 10 and the draught caused by forward movement of the vehicle 1. The radiator fan 10 is driven by the combustion engine 2 via a suitable connection.

The combustion engine 2 is provided with an EGR (Exhaust Gas Recirculation) system for recirculation of exhaust gases. Adding exhaust gases to the compressed air led to the engine's cylinders lowers the combustion temperature and hence also the content of nitrogen oxides (NO_x) formed during the combustion processes. A return line 11 for recirculation of exhaust gases extends from the exhaust line 4 to the inlet line 8. The return line 11 comprises an EGR valve 12 by which the exhaust flow in the return line 11 can be shut off. The EGR valve 12 may also be used for steplessly controlling the amount of exhaust gases led from the exhaust line 4 to the inlet line 8 via the return line 11. A control unit 13 is adapted to controlling the EGR valve 12 on the basis of information about the operating state of the combustion engine 2. The return line 11 comprises a first EGR cooler 14 for subjecting the exhaust gases to a first stage of cooling, and a second EGR cooler 15 for subjecting the exhaust gases to a second stage of cooling. In supercharged diesel engines 2, in certain operating situations, the pressure of the exhaust gases in the exhaust line 4 will be lower than the pressure of the compressed air in the inlet line 8. In such situations it is not possible to mix the exhaust gases in the return line 11 directly with the compressed air in the inlet line 8 without special auxiliary means. To this end it is possible to use, for example, a venturi 16. If instead the combustion engine 2 is a supercharged Otto engine, the exhaust gases in the return line 11 can be led directly into the inlet line 8, since the exhaust gases in the exhaust line 4 of an Otto engine in substantially all operating situations will be at a higher pressure than the compressed air in the inlet line 8. When the exhaust gases have mixed with the compressed air in the inlet line 8, the mixture is led via a manifold 17 to the respective cylinders of the combustion engine 2.

The combustion engine 2 is cooled in a conventional manner by a cooling system which contains a circulating coolant. The coolant is circulated in the cooling system by a coolant pump 18. The cooling system also comprises a thermostat 19 adapted to leading the coolant to a radiator 20 when the coolant has reached a temperature at

which it needs cooling. The radiator 20 is fitted at a forward portion of the vehicle 1 at a location downstream from the charge air cooler 9 and the second EGR cooler 15 with respect to the intended direction of air flow in the region A. The coolant in the cooling system is also used for subjecting the recirculating exhaust gases to the first stage of cooling in the first EGR cooler 14. To this end, the cooling system comprises a manifold in the form of a line 21 which initially leads coolant to the first EGR cooler 14 for the first stage of cooling the recirculating exhaust gases. The first EGR cooler 14 may be fitted on or close to the combustion engine 2. The recirculating exhaust gases may here be cooled from a temperature of about 500-600°C to a temperature in the vicinity of the temperature of the coolant, which is usually within the range 70-90°C. When the coolant has passed through the first EGR cooler 14, it is led via a line 22 to a line 23 in which it is mixed with warm coolant from the combustion engine 2. The coolant is led via the line 23 to the radiator 20, in which it is cooled before being used again for cooling the combustion engine 2 or the recirculating exhaust gases in the first EGR cooler 14. The compressed air in the charge air cooler 9 and the recirculating exhaust gases in the second EGR cooler 15, which is fitted at a front surface of the vehicle 1, have air at the temperature of the surroundings flowing through them. It is thus possible to cool the compressed air and the exhaust gases to a temperature substantially corresponding to the temperature of the surroundings. The air and the exhaust gases are cooled so that they occupy a smaller specific volume. Cooling the compressed air and the exhaust gases to a temperature substantially corresponding to the temperature of the surroundings makes it possible for a substantially optimum amount of air and recirculating exhaust gases to be led into the cylinders of the combustion engine.

When the temperature of the surroundings is low, there is risk of the exhaust gases being cooled to a temperature such that water vapour in the exhaust gases condenses within the second EGR cooler 15. If the temperature of the surroundings is also below 0°C, condensed water vapour may freeze to ice within the second EGR cooler 15. The exhaust flow ducts in the second EGR cooler 15 may thus become obstructed. The exhaust gases should therefore not be cooled to a temperature below 0°C. To prevent such cooling of the recirculating exhaust gases, the return line 11 is provided with a

bypass line 11a. The extent of the bypass line 11a is such that it can lead recirculating exhaust gases past the EGR cooler 15. The return line 11 also comprises a valve means in the form of a three-way valve 24 which can be placed in a first position to lead the whole flow of recirculating exhaust gases in the return line 11 through the second EGR cooler 15 and in a second position to lead the whole flow of recirculating exhaust gases in the return line 11 through the bypass line 11a. The control unit 13 is adapted to controlling the three-way valve 24 on the basis of information from a temperature sensor 25 which is so positioned as to detect the temperature of the surrounding air. If a driver of the vehicle 1 wishes to disconnect the automatic control applied to the three-way valve 24 by the control unit 13, a connecting means 26 can be placed in a position for manual control of the three-way valve 24. Such manual control may be initiated by means of a control device in the form of, for example, a button means 27 situated at an appropriate location in the vehicle's driving cab.

During operation of the combustion engine 2, the control unit 13 thus receives information from the temperature sensor 25 concerning the temperature of the surrounding air. So long as the temperature of the surrounding air is above 0°C, there is no risk of ice formation in the second EGR cooler 15. In this situation, the control unit 13 has the three-way valve 24 placed in the first position and the recirculating exhaust gases undergo both a first stage of cooling in the first EGR cooler and a second stage of cooling in the second EGR cooler 15. The recirculating exhaust gases can thus be cooled to substantially the same temperature as the compressed air in the charge air cooler 9. If the temperature of the surrounding air is below 0°C the control unit 13 needs to take further parameters into account to enable it to determine whether recirculating exhaust gases can be led through the second EGR cooler 15 without risk of the exhaust gases being cooled to a temperature below 0°C. Such a parameter may be the amount of exhaust gases returned via the return line 11. A larger amount of exhaust gases led through the EGR cooler 15 will not be cooled to as low a temperature as a smaller amount of exhaust gases. In situations where the ambient temperature is below 0°C, the control unit 13 can place the three-way valve 24 in the first position whereby larger amounts of exhaust gases are returned via the return line 11 and place the three-way valve 24 in the second position whereby smaller amounts

of exhaust gases are returned via the return line 11. A further parameter which the control unit 13 may take into account is the flow velocity of the surrounding air through the EGR cooler 15. The surrounding air provides more effective cooling of the recirculating exhaust gases when it flows through the EGR cooler 15 at a high velocity than at lower velocities. The flow velocity of the air depends on the speed of the radiator fan 10, which is normally related to the speed of the combustion engine 2 and the speed of the vehicle. On the basis of one or more of the abovementioned parameters, the control unit 13 can place the three-way valve 24 in the first position in certain operating and ambient situations even if the surrounding air is at a temperature below 0°C. In other situations where the surrounding air is at a temperature below 0°C, the control unit 13 will place the three-way valve 24 in the second position so that the recirculating exhaust gases are led past the second EGR cooler 15. Since the recirculating exhaust gases will have already been cooled in a first EGR cooler 14 by the coolant which cools the combustion engine, they will in most circumstances have already undergone relative good but not optimum cooling.

Fig. 2 depicts a second air-cooled EGR cooler 15 in more detail. The EGR cooler 15 comprises a first tank 15a for receiving recirculating exhaust gases from the return line 11 via an inlet aperture 11b. The EGR cooler 15 further comprises a cooling portion 15b in which the recirculating exhaust gases are cooled by surrounding air. The cooling portion 15b comprises in a conventional manner a plurality of substantially parallel tubes for guiding the recirculating exhaust gases. The cooling surrounding air is adapted to flowing through the cooling portion 15b in ducts existing between the tubes. The EGR cooler 15 also comprises a second tank 15c for receiving the recirculating exhaust gases after they have been cooled in the cooling portion 15b. The recirculating exhaust gases leave the second tank 15c via an outlet aperture 11c which is connected to the return line 11. A three-way valve 24 is arranged in the first tank 15a close to the inlet aperture 11b. The three-way valve 24 is arranged close to a bypass line 11a which extends between the first tank 15a and the second tank 15b. The three-step valve 24 and the bypass line 11a may here constitute integral parts of the EGR cooler 15. The EGR cooler 15, the three-step valve 24 and the bypass line 11a may therefore be fitted in a vehicle as a composite unit.

When there is no risk of ice formation, the three-way valve 24 is placed in the first position, leading the recirculating exhaust gases in the return line 11 into the first tank 15a. From the first tank 15a, the recirculating exhaust gases are led to the cooling portion, in which they are cooled by surrounding air. The cooled recirculating exhaust gases leave the EGR cooler 15 via the second tank 15c. In this situation, the recirculating exhaust gases undergo cooling in two stages to a temperature substantially corresponding to the temperature of the surrounding air. When there is risk of ice formation, the three-way valve 24 is placed in the second position. It leads the recirculating exhaust gases substantially directly from the inlet aperture 11b to the bypass line 11a. The exhaust gases flow through the bypass line 11a to a location in the second tank 15c close to the outlet aperture 11c. In this case the exhaust gases are thus led past the cooling portion 15b of the EGR cooler. The bypass line 11a may here have an extent within the region A which thus has air at the temperature of the surroundings flowing through it. The recirculating exhaust gases may thus undergo a certain cooling when they are led through the bypass line 11a. To eliminate the risk of ice formation in the EGR cooler 15, cooling of the recirculating exhaust gases is therefore here effected only in the coolant-cooled EGR cooler 14. Cooling the recirculating exhaust gases in the coolant-cooled EGR cooler only is not optimum but is nevertheless often perfectly acceptable. The second stage of cooling is thus only excluded in situations where the control unit 13 decides that there is an obvious risk of ice formation. In particular, situations where surrounding air is at a temperature just below $0^{\circ}C$ may be relatively brief when, for example, periods of abundant recirculation of exhaust gases can be avoided.

The invention is in no way limited to the embodiments described but may be varied freely within the scopes of the claims.

Claims

1. An arrangement for recirculation of exhaust gases of a supercharged combustion engine (2), which arrangement comprises an exhaust line (4) adapted to leading exhaust gases out from the combustion engine (2), an inlet line (8) adapted to leading air to the combustion engine (2), a return line (11) connected to the exhaust line (4) and the inlet line (8) so that it is possible, via the return line (11), to recirculate exhaust gases from the exhaust line (4) to the inlet line (8), and an air-cooled EGR cooler (15) in which the recirculating exhaust gases are adapted to being cooled by air which is at the temperature of the surroundings, characterised in that the return line (11) comprises a bypass line (11a) which has an extent such that it can lead the recirculating exhaust gases past the EGR cooler (15), and a valve means (24) which can be placed either in a first position to lead the whole flow of recirculating exhaust gases through the EGR cooler (15) or in a second position to lead the whole flow of recirculating exhaust gases through the bypass line (11a).

2. An arrangement according to claim 1, characterised in that the arrangement comprises a manually operable control device (27) by which it is possible to place the valve means (24) in said first position and said second position.

3. An arrangement according to claim 1, characterised in that the arrangement comprises a control unit (13) adapted to receiving information concerning at least one parameter for deciding whether there is risk of ice formation in the EGR cooler (15), and to placing the valve means (24) in the second position when it decides that there is such a risk.

4. An arrangement according to claim 3, characterised in that the arrangement comprises a temperature sensor (25) adapted to detecting the temperature of the surrounding air, and that the control unit (13) is adapted to using information from said temperature sensor to decide whether there is risk of ice formation in the EGR cooler (15).

5. An arrangement according to claim 3 or 4, characterised in that the control unit (13) is adapted to using knowledge of a parameter which is related to the exhaust flow through the return line (11) to decide whether there is risk of ice formation in the EGR cooler (15).

6. An arrangement according to claims 3 to 5, characterised in that the control unit (13) is adapted to using knowledge of a parameter which is related to the flow velocity of the surrounding air through the EGR cooler (15).

7. An arrangement according to any one of the foregoing claims, characterised in that the arrangement comprises a coolant-cooled EGR cooler (14) adapted to cooling the recirculating exhaust gases in a first stage before they are cooled in the air-cooled EGR cooler (15) in a second stage.

8. An arrangement according to any one of the foregoing claims, characterised in that the EGR cooler (15) comprises a first tank (15a) for receiving the recirculating exhaust gases, a cooling portion (15b) through which the recirculating exhaust gases flow during cooling by surrounding air, and a second tank (15c) for receiving the recirculating exhaust gases after they have been cooled in the cooling portion (15b).

9. An arrangement according to claim 8, characterised in that the valve means (24) is arranged in the first tank (15a) and that said bypass line (11a) extends between the first tank (15a) and the second tank (15c).

10. An arrangement according to claim 9, characterised in that the bypass line (11a) constitutes an integral part of the EGR cooler (15).

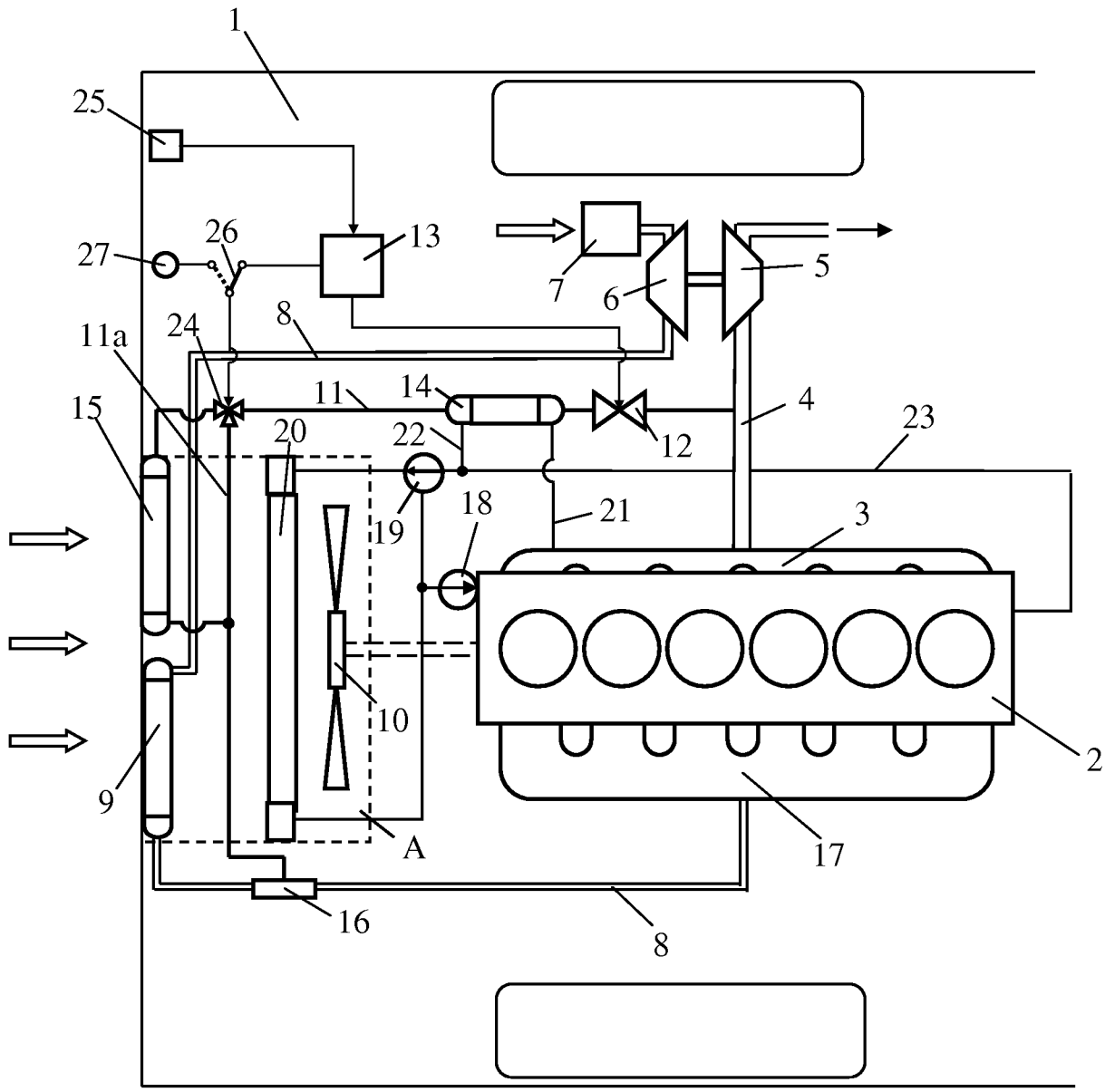
1
25
26
27
13
7
6
5
8
24
11a
11
14
4
23
15
20
22
12
19
18
21
3
10
2
9
A
17
16
8

Fig 1

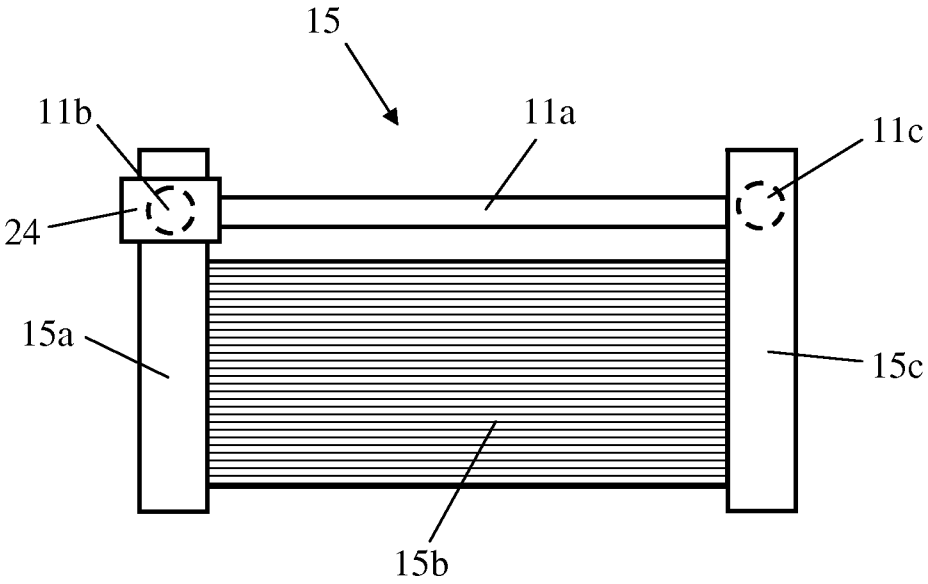

Fig 2

INTERNATIONAL SEARCH REPORT

International application No.
PCT/SE2007/050836

A. CLASSIFICATION OF SUBJECT MATTER

IPC: see extra sheet
According to International Patent Classification (IPC) or to both national classification and IPC

B. FIELDS SEARCHED

Minimum documentation searched (classification system followed by classification symbols)

IPC: F02M

Documentation searched other than minimum documentation to the extent that such documents are included in the fields searched

SE,DK,FI,NO classes as above

Electronic data base consulted during the international search (name of data base and, where practicable, search terms used)

EPO-INTERNAL, WPI DATA, PAJ

C. DOCUMENTS CONSIDERED TO BE RELEVANT

Category*	Citation of document, with indication, where appropriate, of the relevant passages	Relevant to claim No.
X	GB 2421590 A (DETROIT DIESEL CORPORATION), 28 June 2006 (28.06.2006), figure 1, claims 14,18, abstract -- --------	1-10

☐ Further documents are listed in the continuation of Box C. ☒ See patent family annex.

* Special categories of cited documents:
"A" document defining the general state of the art which is not considered to be of particular relevance
"E" earlier application or patent but published on or after the international filing date
"L" document which may throw doubts on priority claim(s) or which is cited to establish the publication date of another citation or other special reason (as specified)
"O" document referring to an oral disclosure, use, exhibition or other means
"P" document published prior to the international filing date but later than the priority date claimed
"T" later document published after the international filing date or priority date and not in conflict with the application but cited to understand the principle or theory underlying the invention
"X" document of particular relevance: the claimed invention cannot be considered novel or cannot be considered to involve an inventive step when the document is taken alone
"Y" document of particular relevance: the claimed invention cannot be considered to involve an inventive step when the document is combined with one or more other such documents, such combination being obvious to a person skilled in the art
"&" document member of the same patent family

Date of the actual completion of the international search	Date of mailing of the international search report
26 February 2008	27-02-2008
Name and mailing address of the ISA/ Swedish Patent Office Box 5055, S-102 42 STOCKHOLM Facsimile No. +46 8 666 02 86	Authorized officer Jan-Axel Ylivainio / JA A Telephone No. +46 8 782 25 00

International patent classification (IPC)

F02M 25/07 (2006.01)

Download your patent documents at www.prv.se
The cited patent documents can be downloaded at www.prv.se by following the links:

- In English/Searches and advisory services/Cited documents (service in English) or
- e-tjänster/anförda dokument (service in Swedish).

Use the application number as username.
The password is **ZHXIKDKZIC**.

Paper copies can be ordered at a cost of 50 SEK per copy from PRV InterPat (telephone number 08-782 28 85).

Cited literature, if any, will be enclosed in paper form.

GB	2421590	A	28/06/2006	DE	102005057086	A 06/07/2006
				GB	0525840	D 00/00/0000
				US	20060130465	A 22/06/2006