J. LEHMAN.

PRESSED STEEL STAIRWAY.

APPLICATION FILED MAY 11, 1921.

1,412,788. Patented Apr. 11, 1922.

Fig. 1.

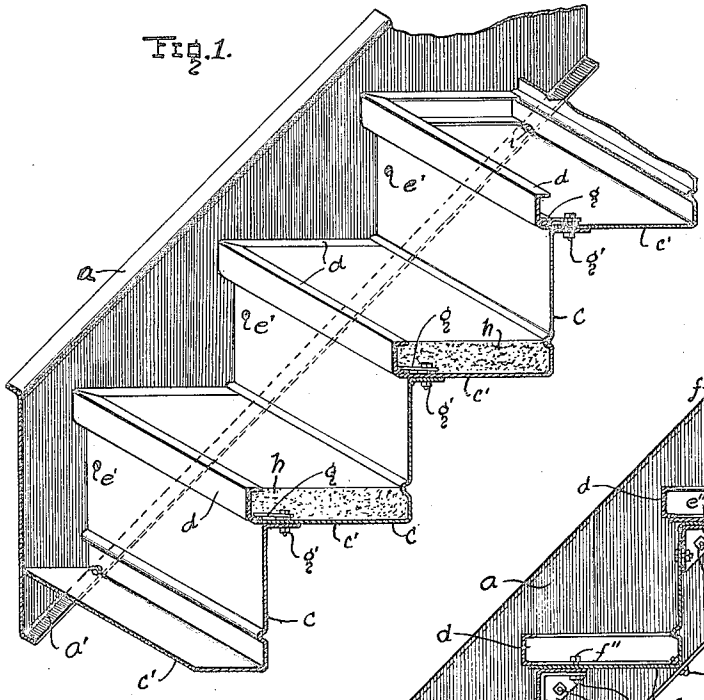

Fig. 2.

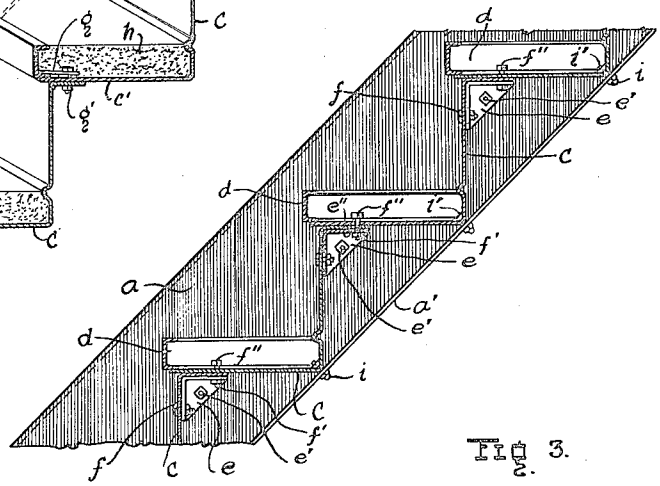

Fig. 5.

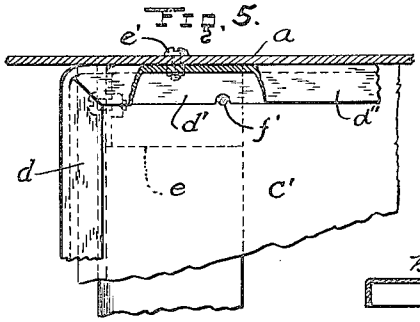

Fig. 3.

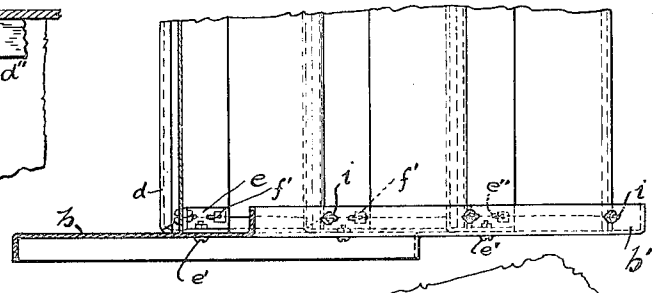

Fig. 6.

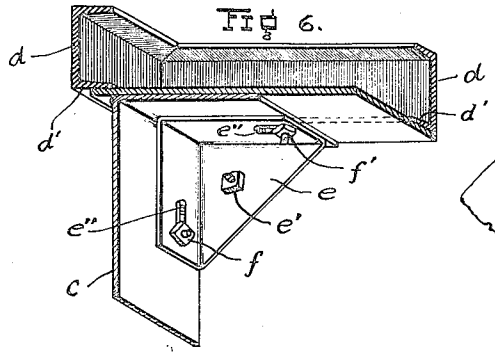

Fig. 4.

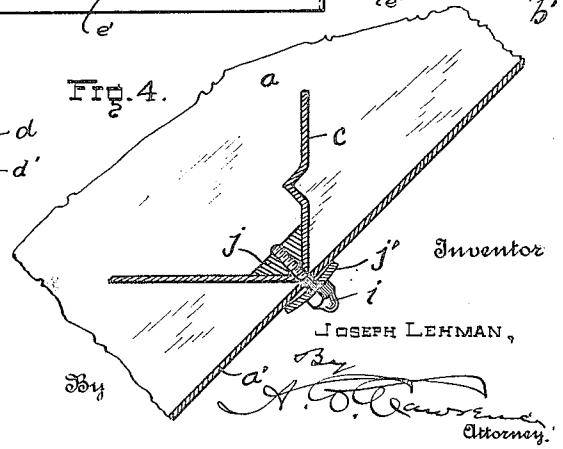

Inventor

JOSEPH LEHMAN,

By

Attorney.

UNITED STATES PATENT OFFICE.

JOSEPH LEHMAN, OF CLEVELAND, OHIO, ASSIGNOR TO THE CONSOLIDATED IRON-STEEL MANUFACTURING COMPANY, OF CLEVELAND, OHIO, A CORPORATION OF OHIO.

PRESSED-STEEL STAIRWAY.

1,412,788. Specification of Letters Patent. Patented Apr. 11, 1922.

Application filed May 11, 1921. Serial No. 468,545.

To all whom it may concern:

Be it known that I, JOSEPH LEHMAN, a citizen of the United States of America, residing at Cleveland, in the county of Cuyahoga and State of Ohio, have invented certain new and useful Improvements in Pressed-Steel Stairways, of which the following is a specification.

My invention relates to improvements in pressed steel stairways, and has for its object the provision of a fireproof stair structure which shall be capable of erection in place from individual units, which shall be light, simple and strong in construction, and which shall afford protection and ready means for removal, replacement and renewal of the stair treads.

With many of the types of metallic stairway now on the market, it is necessary to erect the separate flights, and often their landings, at the factory, or otherwise assemble them in relatively large, heavy units, previous to installation. Moreover, it is necessary to provide therein unduly heavy parts, in order to insure sufficient strength at the critical points. All this contributes to the incidental need of employing hoists or cranes, and a number of attendant workmen, in order to erect and install these types of metallic stairway.

In addition, it frequently is found that considerable expense is entailed in the upkeep of such stairways, by reason of the wear and breakage of the treads, which must be chipped out of their settings, or otherwise removed, with accompanying interruption in the traffic over such stairways, coupled with relatively heavy expense for renewal.

My improvement, by contrast, is directed to the construction of stairway units from relatively light sections of pressed steel, which are adapted to be shipped and handled in knock-down condition, and assembled in position by two or three workmen, at most. In addition, these units include a readily removable and renewable protective unit for the wearable portion of the tread, and are provided with self-adjusting, supporting members and flanged stringers, to which the several stair tread members are terminally connected and secured both at the front and back of each tread.

The structural details, however, may best be explained in connection with the accompanying drawings showing portions of a stairway and of a modified construction thereof; both of which embody my invention.

Figure 1 of said drawings represents in fragmentary perspective and section, a portion of a light type of stairway constructed in accordance with my improvements.

Fig. 2 is a vertical section of a portion of said stairway.

Fig. 3 is a fragmentary under view of the same.

Fig. 4 is an enlarged fragmentary section illustrating a modification for attaching the rear of the tread to the flange of the stringer.

Fig. 5 is a fragmentary plan view, partially broken away and in section, showing the means for attaching the renewable, protective nosing, and

Fig. 6 is an enlarged fragmentary view in sectioned perspective, showing the slotted corner bracket and renewable nosing for the front of the tread.

Throughout the several figures of the drawings I have employed the same character of reference to indicate similar parts.

The pressed steel stairway of my invention comprises relatively few interchangeable members or units, including the two stringers *a*, *b*, having inwardly pressed bottom flanges *a'* and *b'* respectively; the combined tread and riser member *c;* the attachable nosing *d* and the slotted corner bracket *e*. These members are capable of, and adapted for ready assemblage in place, as will be understood by making reference to Figs. 1, 2 and 3.

Each tread and riser *c* is secured to the next adjacent treads and risers, above and below, by the slotted corner brackets *e;* secured in turn at the ends of the forward portion of the tread intermediately of the supporting stringers *a*, *b*. It will be noted that each corner bracket is securely attached by a single bolt *e'* to its supporting stringer, while bolts *f*, and *f'* inserted through the slots *e''* of the bracket, afford a self-adjusting means for assembling the tread and riser, while accommodating any structural inaccuracy. In addition, the head *f'''* on bolt *f'* which passes through an opening or slot in the bottom flange *d'* of the nosing *d* (see Fig. 5) serves removably to secure the

nosing in position upon the tread plate c'. An intermediate clip g and bolt g' (see Fig. 1) serve to retain the nosing in position at the front of the tread plate.

This metallic nosing is channeled and rectangularly bent at the cut away corners, so that an enclosing frame for three sides of the wear-sustaining slab h is afforded, if desired. This slab may be of any suitable material, such as concrete, marble substitute, terrazzo, or maple wood, for example. The metal nosing serves to hold the slab in place, protects all of its exposed edges, yet affords means for readily renewing the slab and nosing when badly worn from long continued use. Another advantageous function of the nosing is the terminal support of the slab and the distribution of the weight and strains to which the slab is subjected by means of the terminal extensions of the nosing which embrace the ends of the slab. It will be seen that these end portions bridge the front and rear points of support for the tread and thus materially strengthen the stairway.

Instead of the usual supporting bracket substantially the full width of the tread, or a specially constructed type of stringer for accommodating the ends of the treads, it will be observed that the three-sided corner brackets are positioned in the most effective location for supporting the weight substantially at the front corners of the treads, while providing the self-adjusting connector for each tread and riser.

An additional attaching means is afforded for the treads, found in the bolts and nuts i, i' which secure the angles of the combined tread and riser member c to the flanges, a', b', respectively, of the stringers a, b. The heads of the bolts or the nuts may be angularly cut, as shown, if desired, in order that they may better fit within the angles of the tread and riser members and firmly secure them in position between the flanged stringers.

In Fig. 4 I have shown a somewhat stronger means for attaching the rear portions of the treads in heavier stairway structures, comprising the corner block j and the heavy dished washer j' through which the bolt i passes for clamping the flange a' and the corner of the tread member c firmly and securely together. This latter reinforcement ordinarily is not required in pressed steel stairways.

While I have shown the metallic nosing extended for a distance along the ends of the slab, it is apparent that the protective feature may be dispensed with for the ends if desired, as they are never normally subjected to wear, and the principal advantage of the nosing is secured midway of the front edge of the tread. Any plastic material may be very readily inserted within the form afforded by the metallic nosing and leveled off therewith. Thus a filling of mastic, or other compositon may be poured directly upon the tread plate within the enclosing nosing, leveled off and permitted to set within a brief period, either upon new work or erection, or in renewal of old work.

The thread plate, being secured between the stringers at its front and back corners, permits a relatively light and cheap construction which is possessed of maximum strength and is very readily erected and firmly secured to the next adjacent members.

Having now illustrated and described preferred embodiments of my invention and defined their principal advantages, I claim as new and desire to secure by Letters Patent the following:

1. In a stairway of the class described, the combination with the parallel stringers, of a plurality of transverse treads and risers, three sided corner bracket members for each of the adjacent treads and risers the same being slotted to accommodate irregularities of construction, means securing the bracket members in position upon the stringers and additional means securing a tread and riser to each of the corner bracket members, substantially as set forth.

2. In a stairway of the class described, the combination with paired stringers, of a plurality of integral tread and riser members secured therebetween, terminal three-sided and slotted corner bracket members for each of the tread members, and means securing them to the stringers and to adjacent tread and riser members retaining them in position between the stringers, substantially as set forth.

3. In a stairway of the class described, the combination with paired, bottom-flanged metallic stringers, of a plurality of L-sectioned metallic tread and riser members secured therebetween, bolts securing the angles of the L-sectioned treads to the flanges of the stringers, reinforcing blocks engaging said angles wherein the bolts extend, and means supporting the terminals of the treads from said stringers, substantially as set forth.

4. In a stairway of the class described, the combination with paired, bottom-flanged metallic stringers, of a plurality of L-sectioned metallic tread and riser members secured therebetween, bolts securing the angles of the L-sectioned treads to the flanges of the stringers, corner blocks into which said bolts are screwed, and means supporting the terminals of the treads from said stringers, substantially as set forth.

5. In a metallic stairway of the class described, the combination with paired metallic stringers, of a plurality of metallic treads and risers positioned therebetween, three-sided slotted corner bracket members for the ends of each of the adjacent treads and

risers, and bolts inserted through said slots, treads and risers and through the stringers, whereby the elements of the stairway are securely assembled and supported for use, substantially as set forth.

6. In a stairway of the class described, the combination with paired, bottom-flanged metallic stringers, of a plurality of L-sectioned metallic tread and riser members secured therebetween, bolts securing the angles of the L-sectioned treads to the flanges of the stringers, three-sided slotted corner bracket members for the ends of each of the adjacent treads and risers, and bolts inserted through said slots, treads and risers and through the stringers, whereby the elements of the stairway are securely assembled and supported for use, substantially as set forth.

7. In a metallic stairway of the class described, the combination with paired, bottom-flanged metallic stringers, of a plurality of L-sectioned metallic tread and riser members secured therebetween, bolts and dished washers engaging said bottom flanges of the stringers and securing the angles of the L-sectioned treads in place, and means supporting the front corners of the treads from said stringers, substantially as set forth.

In testimony whereof I do now affix my signature.

JOSEPH LEHMAN.